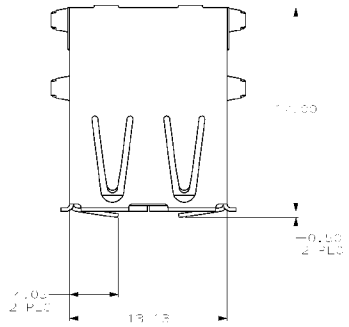

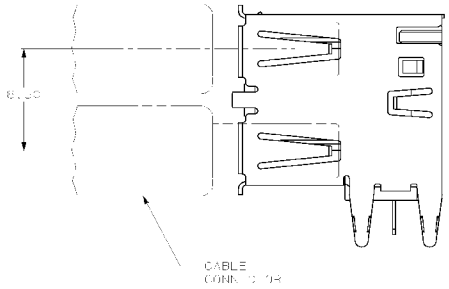

MATERIAL:
SHELL: STAINLESS COPPER ALLOY.
HOUSING: UL 94V-0 RATED, THERMOPLASTIC, SEE [illegible]

PLATING:
CONTACTS: 0.076µm MINIMUM GOLD OVER 0.40µm MINIMUM PALLADIUM NICKEL IN MATING AREA, OR CONTACT ALTERNATE PLATING 0.76µm MINIMUM GOLD IN MATING AREA.
0.89µm MINIMUM INTERMATING SURFACE AREA.
TAIL: 0.[illegible]µm MINIMUM GOLD.
SHELL: 0.[illegible]µm MINIMUM BRIGHT TIN OVER 2.50µm MINIMUM COPPER.

DATUM AND BASIC DIMENSIONS ESTABLISHED BY CUSTOMER.
RECOMMENDED TO BOARD THICKNESS OF 1.57.

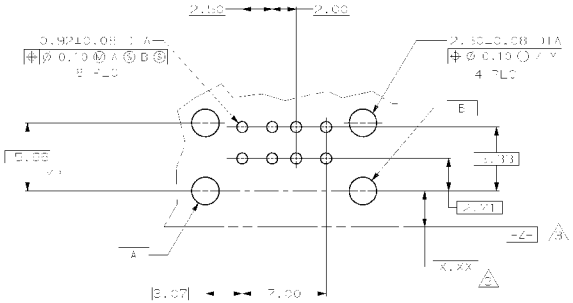

RECOMMENDED TO BOARD MOUNTING DIMENSIONS

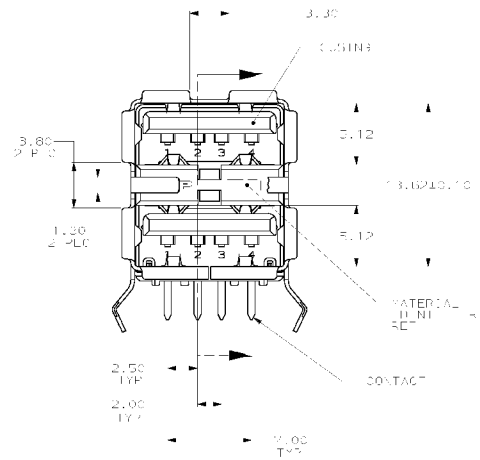

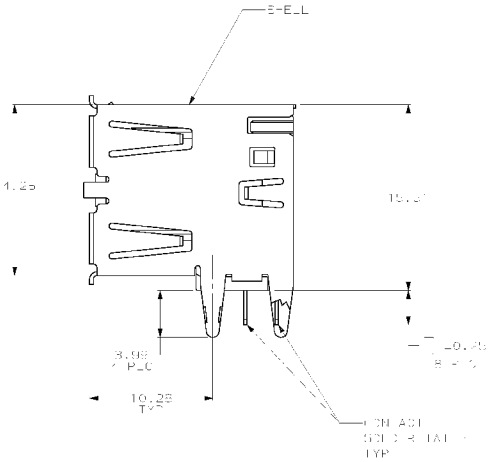

OBSOLETE	YCC	2.84±0.25	NATURAL	787745-0
	YES	2.29±0.25	BLACK	787745-5
	YHS	2.84±0.25	BLACK	787745-[illegible]
	XCC	2.84±0.25	NATURAL	787745-0
	XO	2.29±0.25	BLACK	787745-2
	XO	2.84±0.25	BLACK	787745-[illegible]
HIGH TEMPERATURE COMPATIBLE		D	HOUSING COLOR	PART NUMBER

AMP Incorporated
Harrisburg, PA 17105-3608

RECEPTACLE ASSEMBLY, RIGHT ANGLE, STACKED, USB

CUSTOMER DRAWING

SCALE 5:1 SHEET 1 OF 1 REV K

AMP 496 REV 09-94