THIS IS A CONTROLLED DOCUMENT.

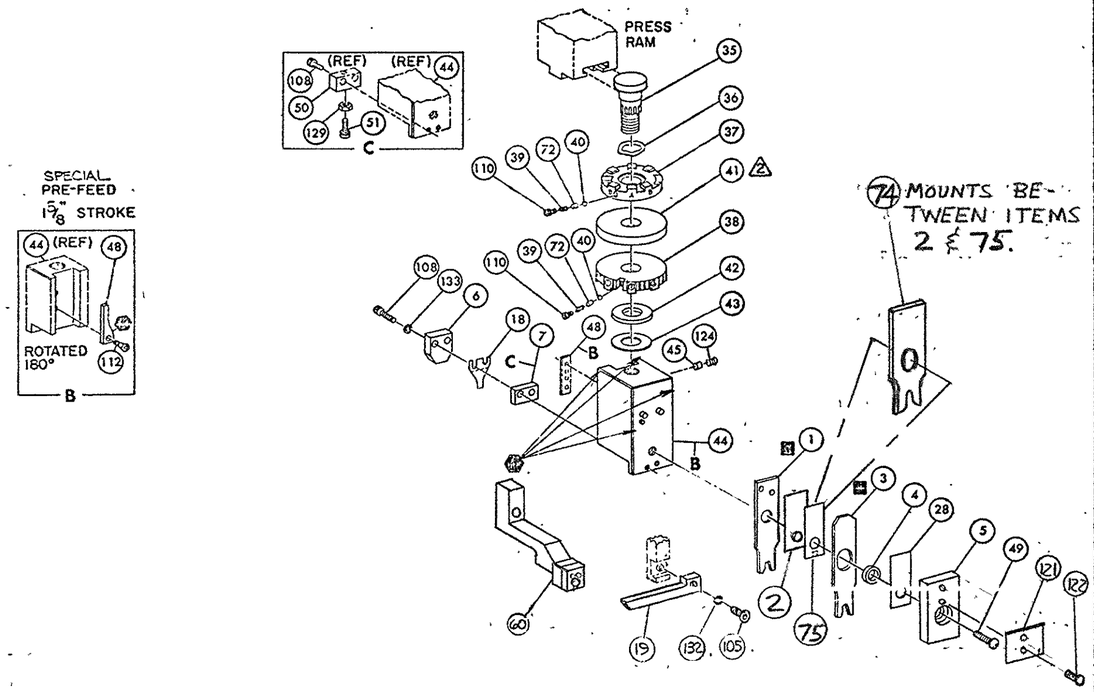

NOTES:

1- ONLY THE ITEMS WITH QUANTITIES SPECIFIED ON PARTS LIST ARE USED ON THIS APPLICATOR.

2 -USED IN PLACE OF ITEM 38 WHEN INSULATION CRIMP IS NOT USED.

3-FEED PIVOT-CENTER HOLE

4 GUIDE OFF STABILIZER BARREL.

KEY:

-RECOMMENDED SPARE PARTS

[redacted]

-GREASE WEEKLY

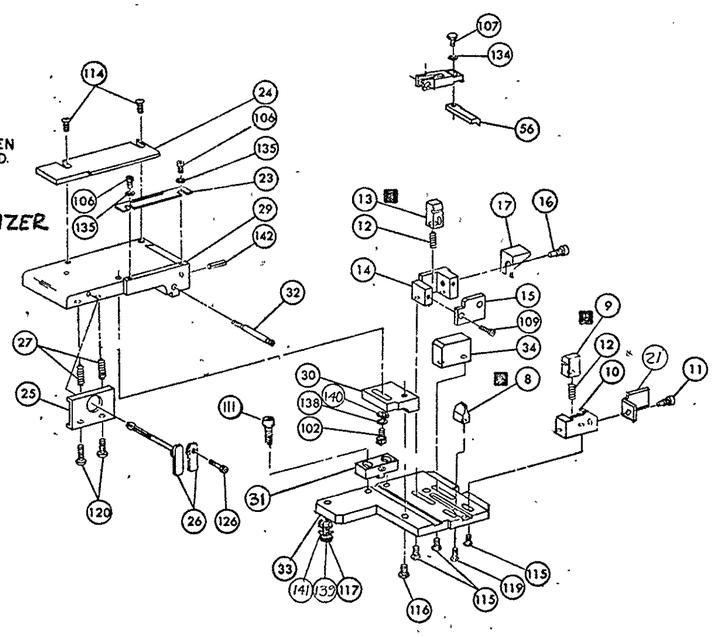

QTY	PART NO	DESCRIPTION	ITEM NO
			145
			144
			143
1	4-21028-0	PIN, SLOT SPR (.093 DIA X .75) STR G PLATE	142
1	21899-2	WASHER, FLAT (NO 10) MOUNTING	141
1	21899-2	WASHER, FLAT (NO 10) S. G. ADJ BLOCK	140
1	21024-5	WASHER, LOCK (NO 10) MOUNTING	139
1	21024-5	WASHER, LOCK (NO 10) STRIP GUIDE ADJ BLOCK	138
			137
			136
2	21057-2	WASHER, LOCK (NO 4) FRONT STRIP GUIDE	135
REF	21024-4	WASHER, LOCK (NO 8) FEED FINGER	134
2	21024-4	WASHER, LOCK (NO 8) DEPRESSOR	133
REF	21024-4	WASHER, LOCK (NO 6) STRIPPER	132
			131
			130
1	21068-5	NUT, HEX MACH (6-32) HOLDDOWN	129
			128
			127
—	22353-8	SCR, SHLD. (.187 DIA X .250 LG) DRAG LEVER	126
			125
1	21009-2	SCR, SKT SET (1/4-20 X .25) (LOC-WEL) RAM	124
			123
2	21017-2	SCR, DRIVE (#2 X .188 LG)	122
1	819347-1	PLATE, I.D.	121
2	2-21002-9	SCR, BUT HD SKT CAP (10-32 X .75) DRAG	120
1	22733-8	SCR, BUT HD SKT CAP (8-32 X .38) (LOC-WEL) ANVIL	119
			118
1	3-21000-9	SCR, SOC HD SKT CAP (10-32 X 1.00) MOUNTING	117
1	2-22733-1	SCR, BUT HD SKT CAP (10-32 X .50) SG ADJ BLOCK	116
4	22733-9	SCR, BUT HD SKT CAP (8-32 X .50) SHEAR	115
2	2-21002-2	SCR, BUT HD SKT CAP (8-32 X .50) R STRIP GUIDE	114
			113
1	1-21002-7	SCR, BUT HD SKT CAP (6-32 X .50) CAM	112
2	2-21000-7	SCR, SKT HD CAP (8-32 X .50) SCR. BLOCK	111
2	23030-1	SCR, SKT HD CAP (6-32 X .25) (LOC-WEL) CP DISC	110
		SCR, SKT HD CAP (6-32 X) REAR SHEAR PLATE	109
2	2-21000-7	SCR, SKT HD CAP (8-32 X .50) DEPRESSOR (REAR)	108
REF	2-21002-1	SCR, BUT HD MACH (8-32 X .38) FEED FINGER	107
2	1-21000-3	SCR, SKT HD CAP (4-40 X .25) F STRIP GUIDE	106
REF	2-21002-1	SCR, BUT HD CAP (8-32 X .38) STRIPPER	105
			104
			103
1	3-22603-1	SCR, HEX HD CAP (10-32 X .38) SG ADJ BLOCK	102
			101
			79
			78
2	463310-6	BLADE, STRIPPING (#22)	77
			76
1	455888-5	SPACER, CRIMPER	75
1	461679-3	CRIMPER, STABILIZER	74
			73
2	690603-1	SPRING, ASSIST	72
			71
			70
			69
			68
			67
			66
			65
			64
			63
			62
			61
REF	816472-1	STOP, WIRE	60

QTY	PART NO	DESCRIPTION	ITEM NO
			59
			58
			57
REF	1-694433-4	PAWL FEED	56
			55
			54
			53
			52
1	811242-2	BUMPER, HOLDDOWN	51
1	690753-1	SPACER, TONKER	50
1	7-21002-9	BOLT, CRIMPER (BUT. HD. 5/16-24 UNF X 1.00)	49
1	690602-6	CAM PRE FEED 1.62 STROKE	48
			47
			46
1	690191-1	PLUG, NYLON	45
1	455673-1	RAM	44
1	690125-1	WASHER, LAMINATED	43
1	690124-1	WASHER, RAM	42
		DISC, SPACER	41
2	23241-6	BALL, STEEL	40
2	690170-1	SPRING, COMPRESSION	39
1	690142-1	DISC, INSULATION	38
1	5-690692-9	DISC, WIRE	37
1	22480-5	WASHER, SPRING	36
1	690212-1	POST, RAM	35
1	460712-2	SUPPORT, TERMINAL	34
1	462544-1	PLATE, BASE SPECIAL	33
1	690432-3	SCREW, ADJUSTMENT	32
1	462543-1	BLOCK, SCREW SPECIAL	31
1	455689-1	BLOCK, STRIP GUIDE ADJ	30
1	455671-3	PLATE, STRIP GUIDE	29
1	455888-4	SPACER, FRONT SHEAR DEPRESSOR	28
2	1-22284-1	SPRING, DRAG	27
1	690546-1	LEVER, DRAG RELEASE	26
1	240792-1	DRAG, STOCK	25
1	6-690504-3	GUIDE STRIP (REAR)	24
1	690438-1	GUIDE, STRIP (FRONT)	23
			22
1	463756-1	GUIDE, SCRAP	21
			20
REF	462615-1	STRIPPER	19
		HOLDER, TERMINAL	18
		GUARD, CHIP (REAR)	17
		STOP, SHEAR (REAR)	16
		PLATE, SHEAR (REAR)	15
		HOLDER, SHEAR (REAR)	14
		SHEAR, FLOAT (REAR)	13
1	5-22280-0	SPRING, SHEAR	12
1	690461-2	STOP, SHEAR (FRONT)	11
1	462548-1	HOLDER, SHEAR (FRONT) SPECIAL	10
1	462547-1	SHEAR, FLOAT (FRONT) SPECIAL	9
1	9-690471-5	ANVIL	8
		SPACER, DEPRESSOR (REAR)	7
		DEPRESSOR, SHEAR (REAR)	6
1	462838-1	DEPRESSOR, SHEAR (FRONT) SPECIAL	5
1	1-238011-0	SPACER, TUBULAR, INS CRIMPER	4
1	5-456135-1	CRIMPER, INSULATION	3
1	455888-3	SPACER, CRIMPER	2
1	2-456402-5	CRIMPER, WIRE	1

VISIBLE	CRIMPING DATA			APPLICATOR WILL APPLY
PAD LTR	CRIMP HEIGHT	WIRE SIZE	WIRE STRIP LENGTH	87124
A	NOT	USED		87330
B	NOT	USED		87846
C	.034	22		
D	.030	26 OR 24		

CRIMP	SIZE	TYPE	FEED	APPL INST
WIRE	.055	F	.330	A1
INSUL	.070	O*		

WIRE RANGE	INSULATION RANGE	PRESS NO
26-22	.038-.062	463345-1

REMARKS
*INS CRIMP HEIGHT TO BE .072 MAX.

REMARKS	NO	REV
	TO APPLY TERMINAL	
APPL USED ON MACHINE PART NO	MACH SERIAL NO	DISTRIBUTION
CUSTOMER NAME	APPL SERIAL NO	ORIGINAL
ADDRESS	PURCHASE ORDER	CUSTOMER COPY
CITY	ENG APP	FIELD ENG COPY

SIM 687676

P.F. LTR	REVISION RECORD	APP	DATE
J	ECN 0150-1152-01	TE	11-01
H	0150-6280-95	LB	7-95
G	ECN A-045888		
F	ECN R-6696		3/86
E	ECN R-6640		2/86
D	ECN R-6547		11/85
C	REV PER R-5772		6-84
B	REV PER R-5105		5-83
A1	ADD TERM A7846 A8330		4-80
A	REV ITEM 37 R2377		2-78

SET UP GAGE 10-1 574
DR 11-1977 APP
CHK
REL 12/21 LOC A C NO 466930-1 REV J
NAME AMPOMATIC STRIPPER CRIMPER APPLICATOR
SIDE FEED (CONTACT ASSY.
CODE IDENT 00779
CUSTOMER AND ASSEMBLY DRAWING
RESTRICTED TO

AMP INCORPORATED Harrisburg Pa

466930-1

THIS DRAWING IS UNPUBLISHED COPYRIGHT 1999 BY AMP INCORPORATED ALL RIGHTS RESERVED
RELEASED FOR PUBLICATION 11

DIST 66

* Trademark of AMP Incorporated

AMP 2983-3 (8-73)