REV.	DATE	DESCRIPTION
NC	1/8/97	INITIAL RELEASE

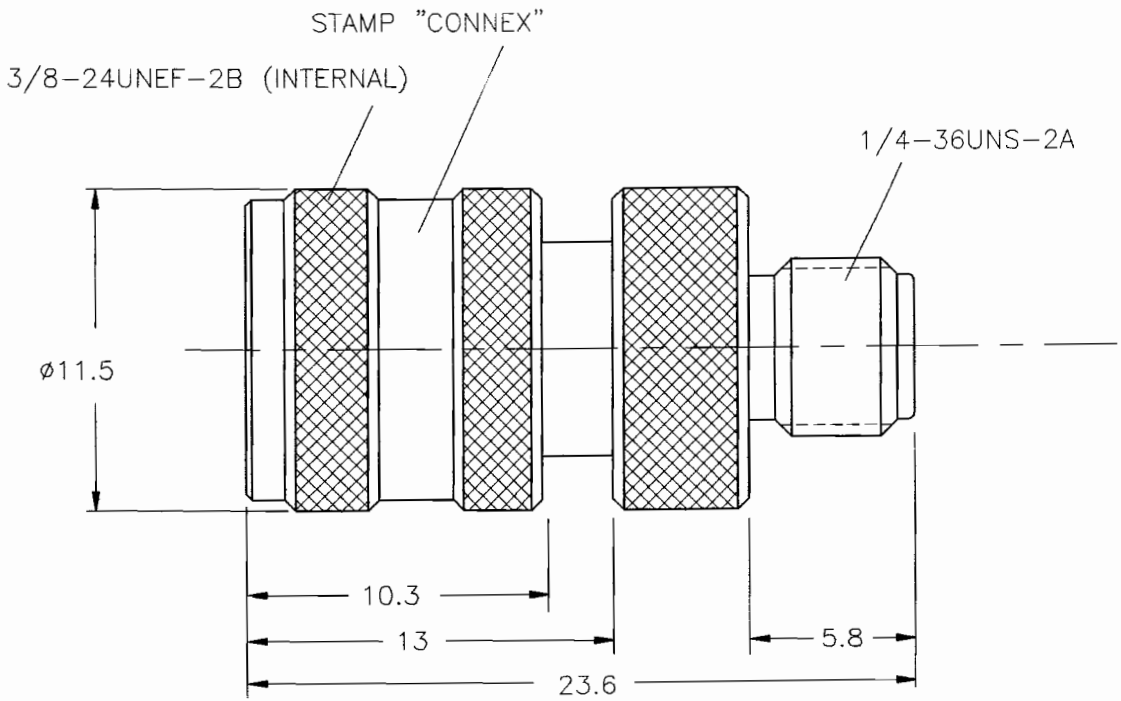

	DESCRIPTION	MATERIAL	FINISH
1	BODY	BRASS	NICKEL
2	CONTACT PIN	PHOS. BRONZE	GOLD
3	INSULATOR	TEFLON	NATURAL
4			
5			
6			
7			
8			

DIMENSIONS ARE IN MILLIMETERS

UNLESS OTHERWISE SPECIFIED TOLERANCES ARE:

0.5–6 = ± 0.2
6–30 = ± 0.4
30–120 = ± 0.6
120–315 = ± 1
315–1000 = ± 1.6
1000–2000 = ± 2.4

DO NOT SCALE DRAWING

APPROVALS		DATE
DRAWN	G.R.S.	1/8/97
CHECKED		
ISSUED		

Connector Corporation

TITLE: SMA FEMALE TO MINI-UHF MALE ADAPTOR

SIZE	FSCM NO.	DWG. NO.	REV.
A	99001	242117.DWG	NC

SCALE	PART NO.	SHEET
4:1	242117	1 OF 1