PART NO.	ENGINEERING NO.	FINISHED LENGTH
1300130008	1R4006A20F040	4.0FT (1.2M)
1300130353	1R4006A20A120	12.0IN (0.3M)
1300130918	1R4006A20M030	3M (9 FT, 10 IN)

CABLE LENGTH TOLERANCES
<.3M [1FT]: +19mm-0 [+.75in-0]
.3 - .9M [1 - 3FT]: +44.5mm-0 [+1.75in-0]
.9 - 1.8M [3 - 6FT]: +55.6mm-0 [+2.19in-0]
1.8 - 3.7M [6 - 12FT: +88.9mm-0 [+3.50in-0]
3.7 - 7.3M [12 - 24FT]: +165.1mm-0 [+6.50in-0]
7.3-14.6M [24 - 48FT]: +317.5mm-0 [+12.50in-0]
14.6 - 30.5M [48-100FT]: +622.3mm-0 [+24.50in-0]
OVER 30M [100FT] +2% OF FINISHED LENGTH

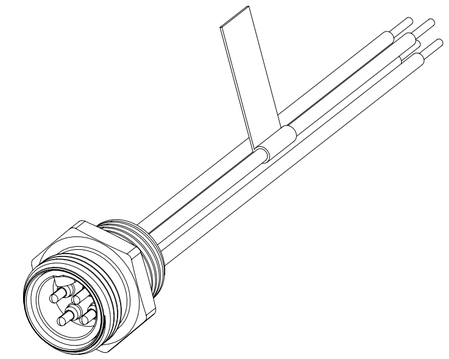

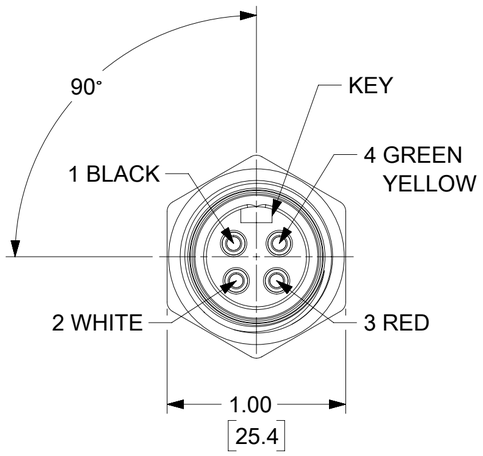

MALE FACE VIEW

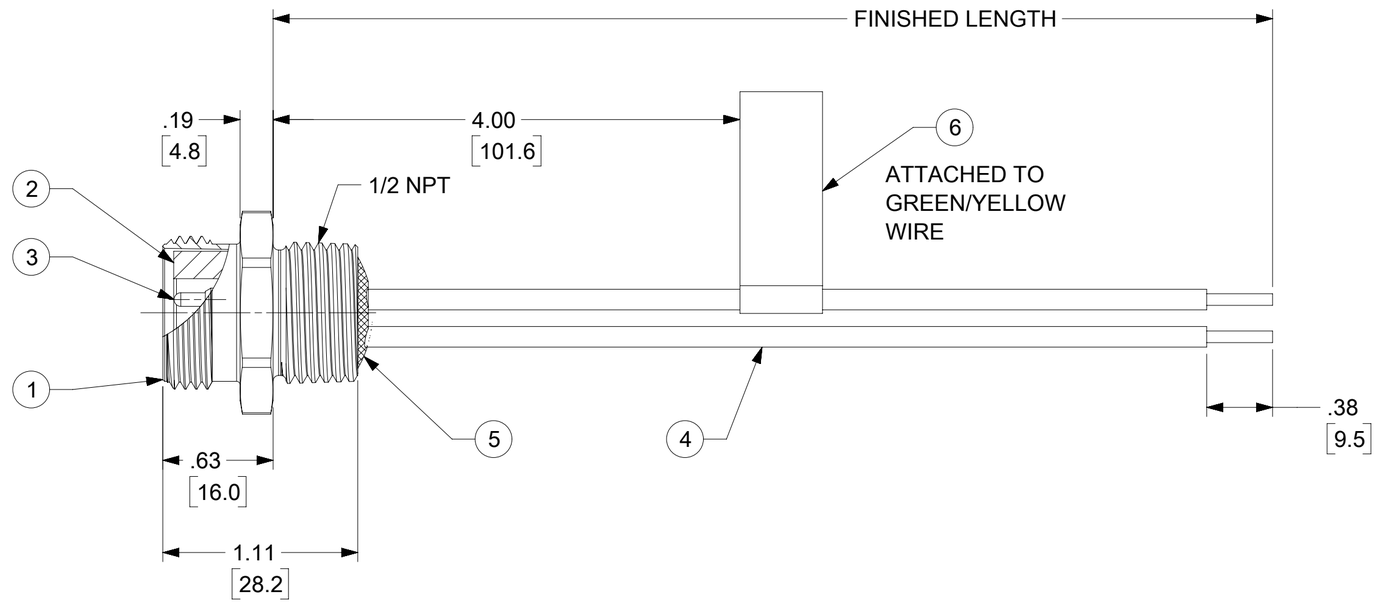

NOTES:
1. MATERIAL: AS NOTED
2. FINISH: AS NOTED
3. ELECTRICAL:
   VOLTAGE: 483V PER IEC60664
   600V PER UL2238
   CURRENT: 10A
4. TEMP RATING: -20°C TO +105°C
5. PROTECTION: IP67 (WHEN MATED)
6. COUPLING THREAD: 7/8-16 UN
7. UL RECOGNIZED FILE: E152210
   CSA CERTIFIED: LR6837
8. ALL DIMS ARE FOR REFERENCE UNLESS TOLERANCED OR NOTED OTHERWISE

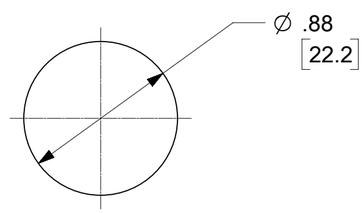

REF. KNOCKOUT HOLE

PART NUMBER LEGEND

1R4006A20F040

LENGTH
A060 =6 IN
A120 = 12 IN
F060 = 6.0 FT
M003 = 0.3 METERS
M010 = 1.0 METERS
M100 = 10.0 METERS

ITEM	DESCRIPTION	MATERIAL	FINISH
6	FLAG LABEL	VINYL	BLACK/YELLOW
5	POTTING MATERIAL	EPOXY	
4	WIRE #16 (UL 1015)	PVC INSULATION	SEE FACE VIEW
3	CONTACT PIN	Cu ALLOY	GOLD PLATED
2	INSERT	TPE	YELLOW
1	RECEPTACLE SHELL	ZINC (DIE-CAST)	BLACK E-COAT

DOCUMENT STATUS	P1	RELEASE DATE	2021/07/12 18:53:06

THIS DRAWING CONTAINS INFORMATION THAT IS PROPRIETARY TO MOLEX ELECTRONIC TECHNOLOGIES, LLC AND SHOULD NOT BE USED WITHOUT WRITTEN PERMISSION

FUNCTIONAL SYMBOLS
FA = 0
FC = 0
FP = 0
DIVISIONAL SYMBOLS

DIMENSION UNITS: INCH/MM
SCALE: 1:1

GENERAL TOLERANCES (UNLESS SPECIFIED)

	MM	INCH
4 PLACES	±	±
3 PLACES	±	±
2 PLACES	±	±
1 PLACE	±	±
0 PLACES	±	±
ANGULAR TOL	± °	

DRAFT WHERE APPLICABLE MUST REMAIN WITHIN DIMENSIONS

CURRENT REV DESC: REDRAWN TO NX FOR 4 POLE, REPLACES SD-130013-120

EC NO: 668276
DRWN: RSTONE 2021/06/23
CHK'D: MZIELINSKI 2021/07/08
APPR: BWOODMAN 2021/07/12

INITIAL REVISION:
DRWN: RSTONE 2021/06/23
APPR: BWOODMAN 2021/07/12

THIRD ANGLE PROJECTION
DRAWING: C-SIZE
SERIES: 130013

molex

MINI-CHANGE RECEPTACLE
4 POLE MALE, STRAIGHT, SINGLE KEY, 16 AWG

PRODUCT CUSTOMER DRAWING

DOCUMENT NUMBER	DOC TYPE	DOC PART	REVISION
1300130008	PSD	000	A

MATERIAL NUMBER	CUSTOMER	SHEET NUMBER
SEE P/N LEGEND	GENERAL MARKET	1 OF 1

FORMAT: Eng-lega-master-tb-prod-C
REVISION: E
DATE: 2020/01/14