MATERIAL NUMBER LOOSE PCS	ENGINEERING NUMBER LOOSE PCS	MATERIAL NUMBER ON STRIP	ENGINEERING NUMBER ON STRIP	MATERIAL NUMBER ON TAPE	ENGINEERING NUMBER ON TAPE	MATERIAL NUMBER REV WOUND ON TAPE	ENGINEERING NUMBER REV WOUND ON TAPE	MATERIAL NUMBER ON TAPE BIG REEL	ENGINEERING NUMBER ON TAPE BIG REEL	ACCEPTS TAB SIZE	STOCK THK	"A" MAX	"B" MAX	"F" REF	"G" MAX	"H" REF
190020001	AA-5261	190020004	AA-5261Z	190020002	AA-5261T	190020003	AA-5261TR	190020047	AA-5261BT	.250 X .032	.016/0.41	.89/22.6	.38/9.7	.16/4.1	.20/5.1	1.425/36.20
190020019	AA-5283	190020059	AA-5283Z	190020020	AA-5283T	190020058	AA-5283TR			.205 X .020	.016/0.41	.80/20.3	.32/8.1	.16/4.1	.22/5.6	1.395/35.43
190020021	AA-5285	190020023	AA-5285Z	190020022	AA-5285T	190020060	AA-5285TR			.205 X .032	.016/0.41	.80/20.3	.32/8.1	.16/4.1	.22/5.6	1.395/35.43
190020005	AA-5267	190020008	AA-5267Z	190020007	AA-5267T			190020006	AA-5267BT	.187 X .020	.016/0.41	.80/20.3	.32/8.1	.16/4.1	.22/5.6	1.380/35.10
190020009	AA-5271	190020012	AA-5271Z	190020010	AA-5271T	190020011	AA-5271TR			.187 X .032	.016/0.41	.80/20.3	.32/8.1	.16/4.1	.22/5.6	1.380/35.10
190020013	AA-5275	190020015	AA-5275Z	190020014	AA-5275T					.110 X .020	.012/0.31	.80/20.3	.23/5.8	.13/3.3	.20/5.1	1.380/35.05
190020016	AA-5279	190020018	AA-5279Z	190020017	AA-5279T	190020065	AA-5279TR			.110 X .032	.012/0.31	.80/20.3	.23/5.8	.13/3.3	.20/5.1	1.380/35.05

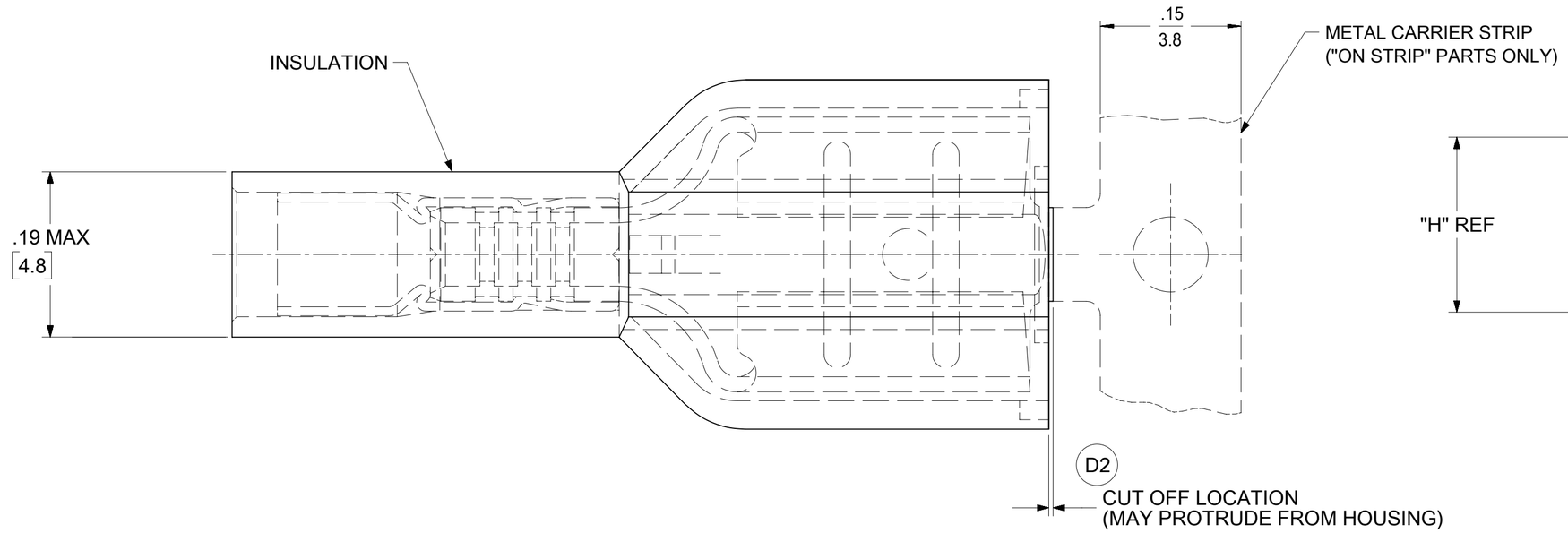

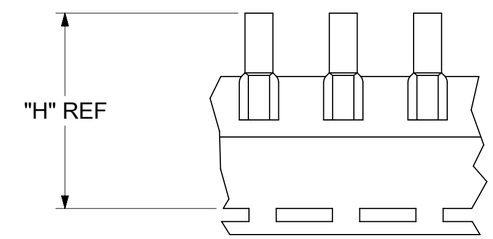

PARTS ON TAPE

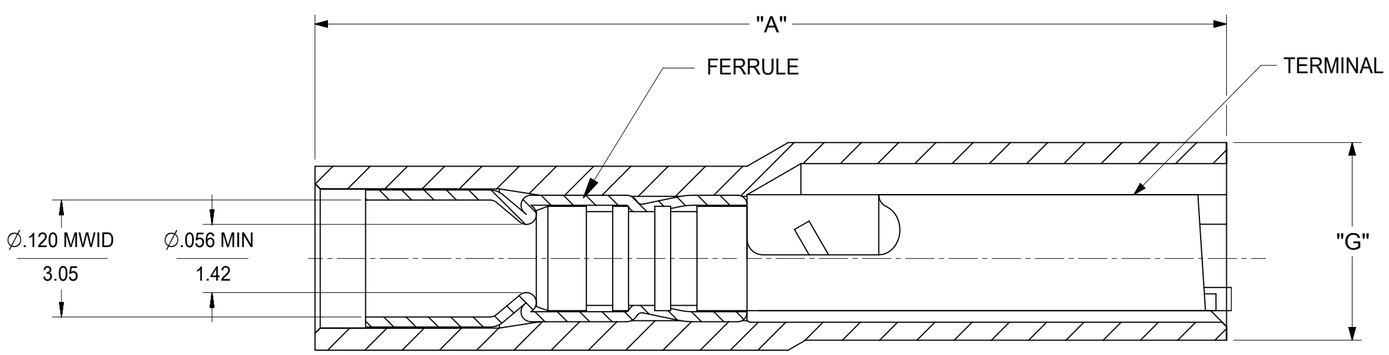

TERMINAL IS NOT SECTIONED FOR CLARITY

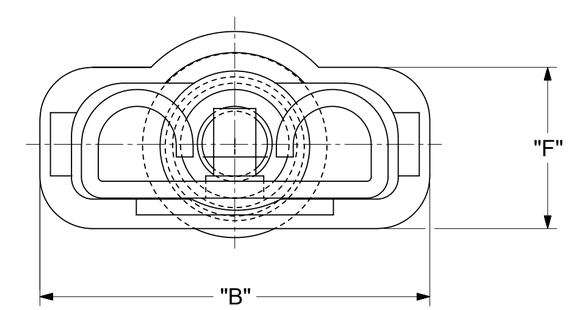

NOTES:

1. MATERIAL: TERMINAL BRASS
   TERMINAL PLATING: ELECTRO TIN
   FERRULE: COPPER ALLOY
   FERRULE PLATING: ELECTRO TIN
   INSULATION: NYLON 94V2 COLOR RED.
2. MWID = MAXIMUM WIRE INSULATION DIAMETER
3. PARTS ARE RoHS COMPLIANT.

DOCUMENT STATUS	P1	RELEASE DATE	2019/01/03 19:35:50

SYMBOLS: F/A = 0; F/C = 0; F/D = 0; S = 0; ▼ = 0; C = 0; ☒ = 0; ■ = 0; V = 0

DIMENSION UNITS: IN/MM
SCALE: 1:1

GENERAL TOLERANCES (UNLESS SPECIFIED)

	MM	INCH
4 PLACES	±	±
3 PLACES	±	± 0.005
2 PLACES	± 0.13	± 0.01
1 PLACE	± 0.25	±
0 PLACES	±	±
ANGULAR TOL	± °	

DRAFT WHERE APPLICABLE MUST REMAIN WITHIN DIMENSIONS

THIS DRAWING CONTAINS INFORMATION THAT IS PROPRIETARY TO MOLEX ELECTRONIC TECHNOLOGIES, LLC AND SHOULD NOT BE USED WITHOUT WRITTEN PERMISSION

CURRENT REV DESC: ADD CUTOFF MAX

EC NO: 609893
DRWN: DMYRICK 2019/01/02
CHK'D: JMACNEIL 2019/01/03
APPR: JMACNEIL 2019/01/03

INITIAL REVISION:
DRWN: BENDERLE 2005/04/25
APPR: RDEROSS 2005/04/26

THIRD ANGLE PROJECTION | DRAWING: C-SIZE | SERIES: 19002

molex

AVIKRIMP FEMALE FIQD
22-18 AWG

PRODUCT CUSTOMER DRAWING

DOCUMENT NUMBER	DOC TYPE	DOC PART	REVISION
SD-19002-003	PSD	001	D2

MATERIAL NUMBER	CUSTOMER	SHEET NUMBER
SEE CHART	GENERAL MARKET	1 OF 1

FORMAT: Eng-tega-master-tb-prod-C
REVISION: D
DATE: 2018/01/18