THIS COPY IS PROVIDED ON A RESTRICTED BASIS AND IS NOT TO BE USED IN ANY WAY DETRIMENTAL TO THE INTERESTS OF PANDUIT CORP.

NOTES:
1. DIAMETER DIMENSION SHOWN FOR REFERENCE ONLY.
2. DIMENSIONS IN BRACKETS [ ] ARE ENGLISH.
3. FOR PART NUMBERS AND LENGTHS OTHER THAN THOSE SHOWN, CONTACT YOUR PANDUIT SALES PERSON.
4. CABLE IS NOT LONGITUDINALLY WATER-BLOCKED.
5. CABLE MEETS REQUIRMENTS OF EUROCLASS Cca PER EN 50575.
6. CABLE DECLARATION OF PERFORMANCE IS PAN-DOP-FA016.

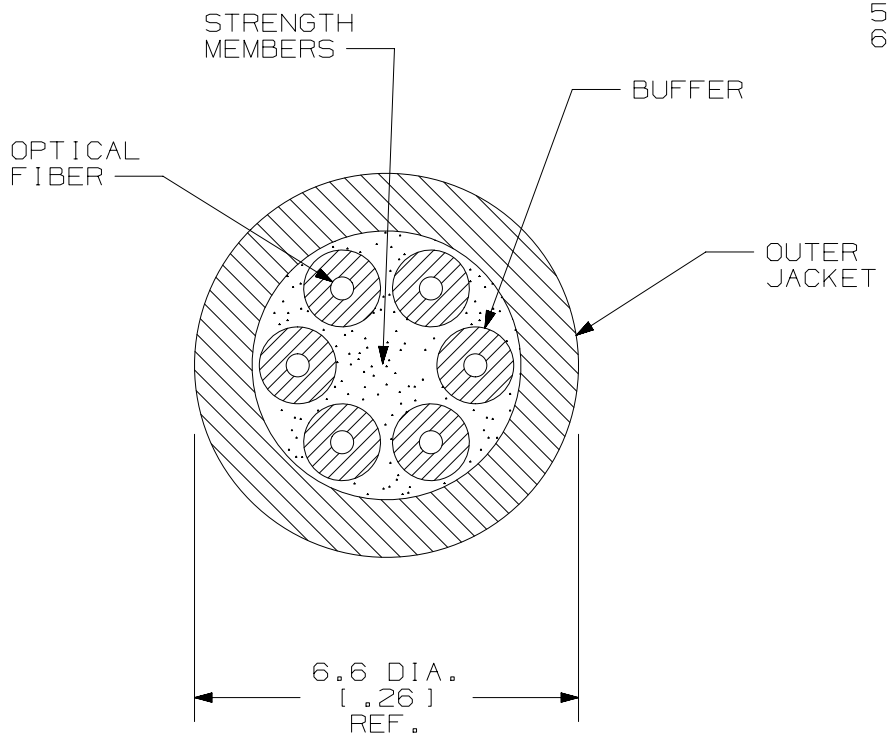

CABLE DESCRIPTION		
FIBER OPTIC SINGLE STRAND DISTRIBUTION CABLE		
PART NUMBERS AVAILABLE	FIBER TYPE	JACKET RATING
FAKC906-24	SINGLEMODE 9/125um	LSZH
FAKC606-24	MULTIMODE 62.5/125um OM1	LSZH
FAKC506-24	MULTIMODE 50/125um OM2	LSZH
FAKCX06-24	MULTIMODE 50/125um OM3	LSZH
FAKCZ06-24	MULTIMODE 50/125um OM4	LSZH

TECHNICAL SPECIFICATIONS		
MAXIMUM LOSS	BEND RADIUS	
	INSTALLATION	LONG TERM
3.5 dB/KM @ 850nm 1.5 dB/KM @ 1300nm	66 mm (2.60 in)	132 mm (5.20 in)
SINGLEMODE MAXIMUM LOSS	TENSILE LOAD - LSZH RATED	
	INSTALLATION	LONG TERM
.75 dB/KM @ 1310nm .75 dB/KM @ 1500nm	440 N (99 lbf)	220 N (49.5 lbf)

TEMPERATURE		
INSTALLATION	OPERATION	STORAGE
-20° C TO +60° C -4° F TO +140° F	-40° C TO +70° C -40° F TO +158° F	-40° C TO +70° C -40° F TO +158° F

REV	DATE	BY	CHK	APR	DESCRIPTION	ECN
00A	03-22-18	SAT	WMA	SKH	INITIAL RELEASE	M02432DW-DC-06

TITLE
FIBER OPTIC SINGLE STRAND 6 FIBER INDOOR/OUTDOOR CABLE WITH 900um BUFFERED FIBERS

CUSTOMER DRAWING

ITEM REVISION NAME: M02432DW/00

DATASET FILE NAME: M02432DW_DC_06/00A

UNLESS OTHERWISE SPECIFIED, DIMENSIONAL TOLERANCES ARE: IN [mm]
.X ± .XXX ± .010 [0.3]
.XX ± .03 [0.8] ANGLES ±

THIRD ANGLE PROJECTION

PART NO.: FAKC*06-24

DRAWING NUMBER: M02432DW-DC-06

DRAWN BY	DATE	CHK	SCALE	SHT 1 OF 1	SIZE
SAT	03-22-18	WMA	NONE		A