REV.	DATE	DESCRIPTION
NC	07/30/00	INITIAL RELEASE

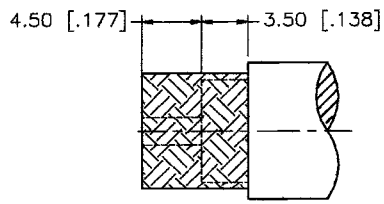

RECOMMENDED
CABLE STRIPPING DIM'S

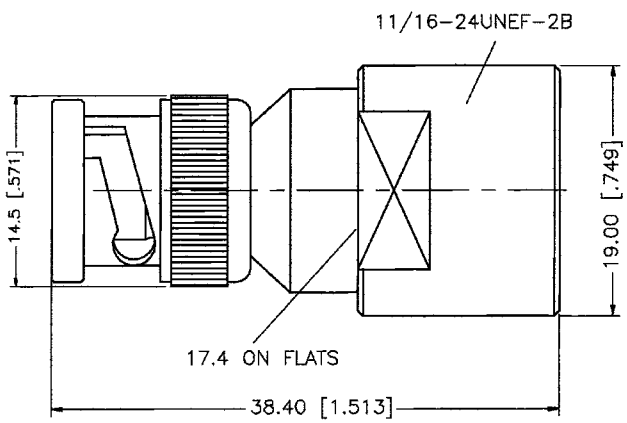

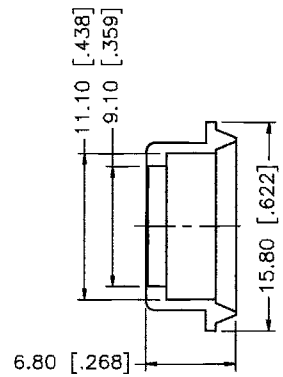

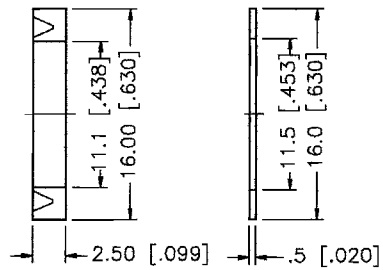

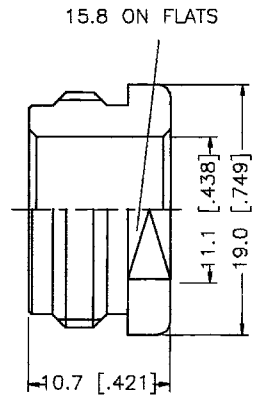

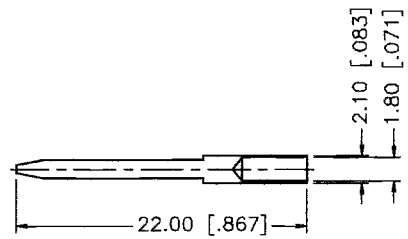

	DESCRIPTION	MATERIAL	FINISH
1	BODY	BRASS	NICKEL
2	INSULATOR	TEFLON	NATURAL
3	BRAID CLAMP	BRASS	NICKEL
4	GASKET	SILICONE	RED
5	WASHER	BRASS	NICKEL
6	NUT	BRASS	NICKEL
7			
8			

UNLESS OTHERWISE SPECIFIED DIMENSIONS ARE IN MILLIMETERS

DIMENSIONS IN [ ] ARE IN INCHES FOR CUSTOMER REFERANCE ONLY

UNLESS OTHERWISE SPECIFIED TOLERANCES FOR MILLIMETERS ARE:

0.5–6 = ± 0.2
6–30 = ± 0.4
30–120 = ± 0.6
120–315 = ± 1
315–1000 = ± 1.6
1000–2000 = ± 2.4

DO NOT SCALE DRAWING

APPROVALS		DATE
DRAWN	G.R.S.	07/30/00
CHECKED		
ISSUED		

Connex
Connector Corporation

TITLE BNC CLAMP JACK (FOR RG11/U, 14 AWG B 8213, B929L CABLE)

SIZE	FSCM NO.	DWG. NO.	REV.
A	99001	112657.DWG	NC

SCALE NA | PART NO. 112657 | SHEET 1 OF 1