PART NUMBER	A (Overall Depth)	B (Useable Depth)	C (Top/Btm U Usable)
HWMR1932U	18.0" - 24.0"	15.1" - 21.1"	12.4" - 18.4"

NOTE: DEPTH IS FULLY ADJUSTABLE WITHIN RANGE

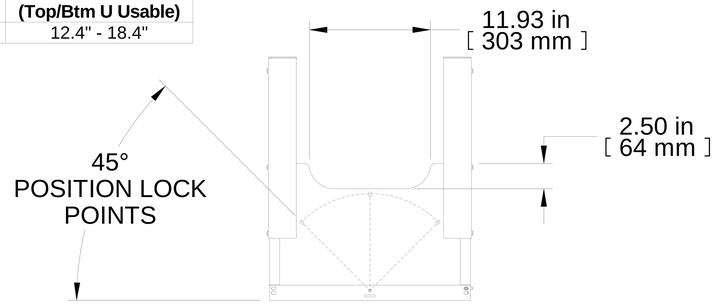

TOP VIEW

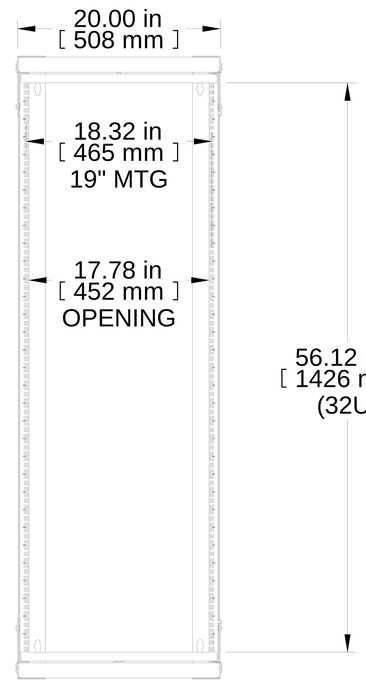

FRONT VIEW

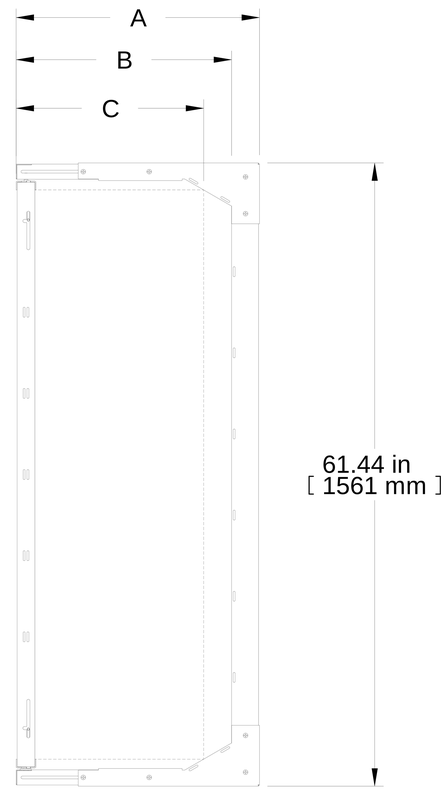

R.S. VIEW

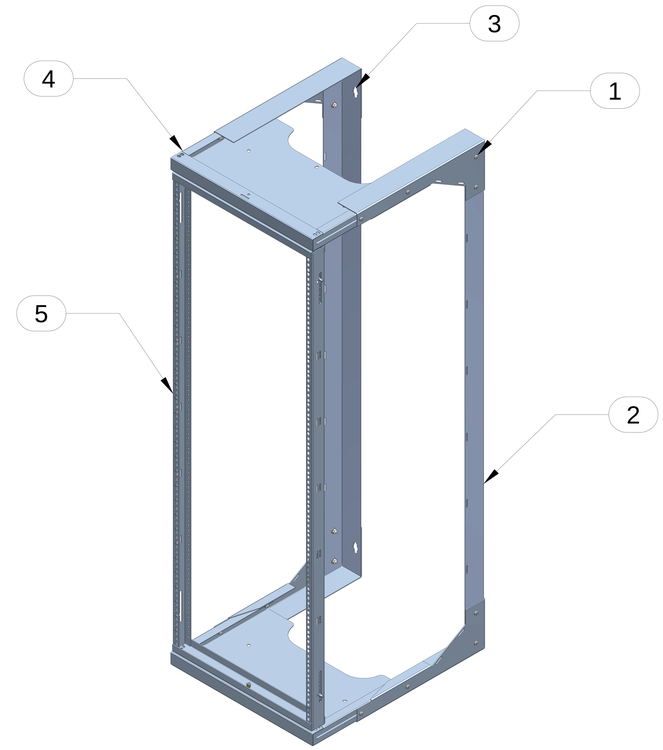

ISOMETRIC

REAR VIEW
WALL MOUNT DIMENSIONS

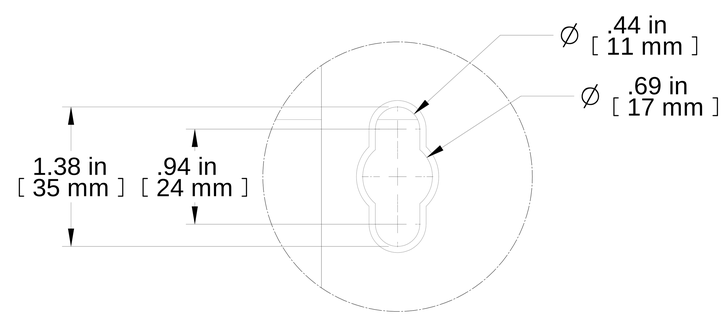

DETAIL A

Item Number	Title	Quantity
1	HWMR - MAIN SUPPORT BRKT RH	2
2	HWMR - VERT WALL BRKT	2
3	HWMR - MAIN SUPPORT BRKT LH	2
4	HWMR - TOP/BTM SUPPORT	2
5	HWMR - SWING FRAME ASSY	1
6	HME - SWING FRAME SPACER	1

PART NUMBERS

HWMR1932UBK	PAINTED THIN FILM BLACK

NOTES

Adjustable Depth and Rotating Rack
Shipped Knock-down, Assembly Hardware Included
No Mounting Hardware Included
See Hammond Website for More Information

Français

Pour tous les détails sur nos produits,
svp veuillez consulter notre site www.hammondmfg.com

Data subject to change without notice. Isometric drawing not to scale.
Les données sont sujettes à changement sans préavis.

RoHS

HAMMOND MANUFACTURING®
www.hammondmfg.com

PART NO. HWMR1932UBK