THIS DRAWING CONTAINS INFORMATION THAT IS PROPRIETARY TO J.S.T. AND SHALL NOT BE USED OR SHOWN WITHOUT WRITTEN PERMISSION.

ITEM	CONNECTOR PART NO.	DESCRIPTION	IPI CHECK	EOR CHECK	Applicable Tooling
1	RSFP-LP-1V-R-250-K	RSF CONNECTOR BLACK HOUSING, W-W			APPLICATOR
2	SRSF-61-250A	RSF CONTACT - BRASS			
3	UL1015, 16 AWG	BLACK			

SUGGESTED MATING TAB

NO SCALE

	WITHOUT STABILIZER	WITH STABILIZER
DIM. "A"	2.20 [0.087] MIN.	4.20±0.15 [0.165±0.006]
DIM. "B"	7.40 [0.291] MIN.	7.98 [0.314] MIN.
DIM. "C"	5.90 [0.232] MAX.	(7.6)

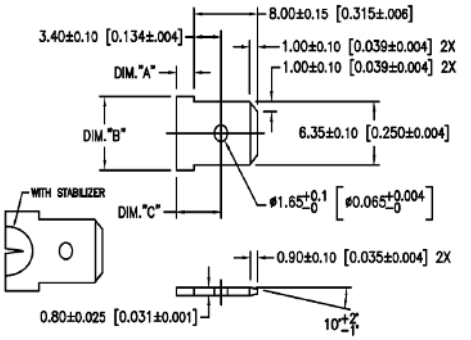

MATING TAB NOTES:
4. MAT'L: BRASS.
FINISH: SUGGESTED NO PLATING.

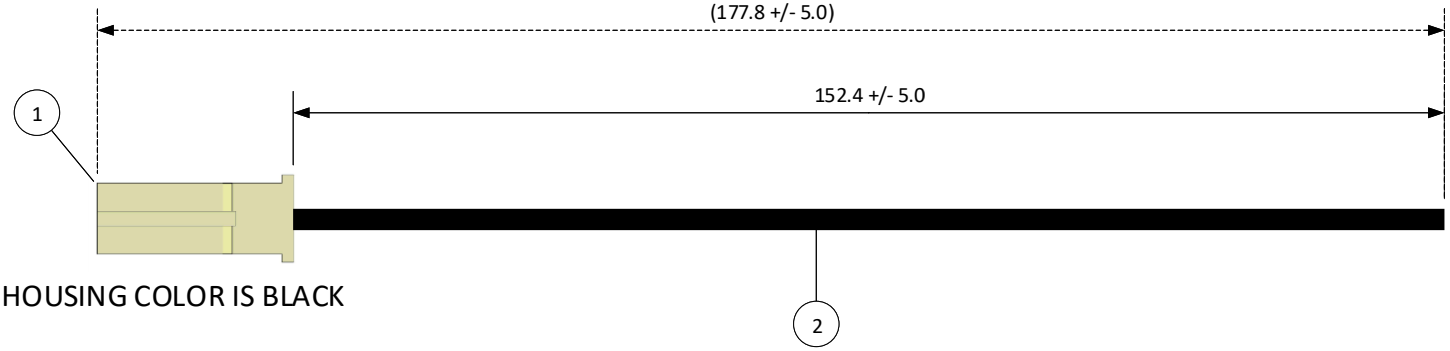

HOUSING COLOR IS BLACK

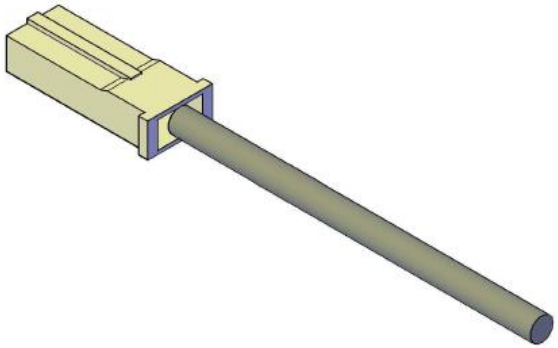

REV.	DESCRIPTION	DATE	BY

SCALE 1: 1	CUSTOMER NAME	CUSTOMER PART NO.
DIMENSIONS All dimensions are in MM with a tolerance of +/- 3.0 unless otherwise specified.	DESCRIPTION 6" INSIDE LENGTH – 1 POSITION, LIF, POS LOCK, .250, W-W INSULATED PLUG W/BLUNT LEADS, BLACK HSG MATES W/W-W RECPT 01RSFR16K152K	
DRAWN BY STEVEN PILKINGTON	ASSEMBLY PART NO. A01RSFP16K152K	
CHECKED BY JUSTIN BAKER	DRAWING NO. & REVISION GAM-113	REVISED 3/11/2016