REVISION RECORD		
REV	DESCRIPTION	DRFT

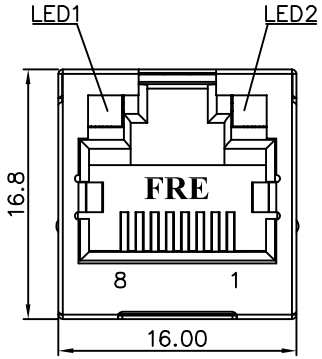

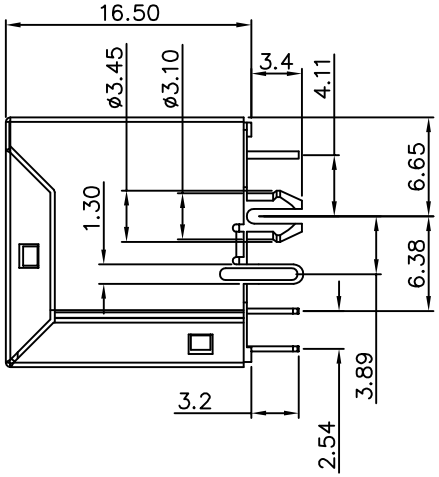

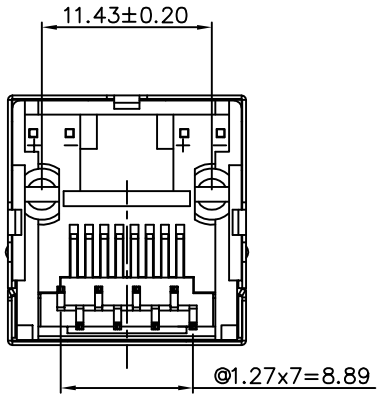

NOTES:

ELECTRICAL:

1. VOLTAGE RATING : 125 VAC RMS.
2. CURRENT RATING : 1.5 AMP.
3. CONTACT RESISTANCE : 40 MILLIOHMS MAX.
4. INSULATION RESISTANCE: 1000 MEGOHMS MIN @ 500 VDC.
5. DIELECTRIC STRENGTH : 1000 VDC RMS 60Hz, 1MIN.
6. LED RATINGS: FORWARD VOLTAGE: 2.2 VOLTS TYPICAL
   REVERSE VOLTAGE: 5 VOLTS MAXIMUM.

MECHANICAL:

1. SHIELD MATERIAL : COPPER ALLOY PLATING NI
2. HOUSING MATERIAL : FR50 UL94V-0
   HOUSING COLOR : BLACK
3. CONTACT MATERIAL : PHOSPHOR BRONZE t=0.35mm.
4. PLATING : GOLD PLATING OVER NICKEL.
5. OPERATING LIFE : 750 CYCLES MIN.
6. PCB RETENTION PRE-SOLDER : 1 LB MIN.
7. PCB RETENTION POST-SOLDER : 10 LBS MIN.

ENVIRONMENTAL:

1. STORAGE : -40°C TO +85°C.
2. OPERATION: -40°C TO +85°C.
3. WAVE SOLDER TEMPERATURE: 255°C ~265°C.
   5~10 SECONDS

MATES WITH MODULAR PLUG CONFORMING TO
FCC PART 68, SUBPART F.
CUL FILE NO. E163191

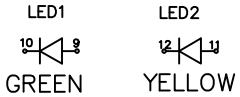

LED COLOR DISPLAY

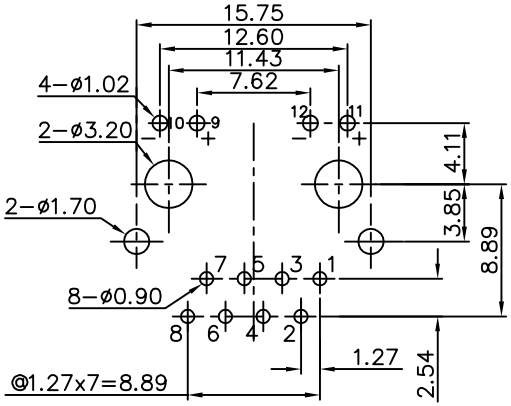

PC BOARD LAYOUT T=1.60mm
COMPONENT SIDE SHOWN
TOLERANCES±0.05mm

E5288-3A0C02-L	NICKEL	W/	6u"
PART NO.	SHIELD PLATING	FRE LOGO	Au PLATING

DETACHED LISTS

MM (INCH)

TOLERANCES EXCEPT AS NOTED

MM	
.0 ± 0.25	±
.00 ± 0.20	±
.000 ± 0.10	±

ANGLES ± 1°

THIRD ANGLE PROJECTION

RoHS Compliant

Pulse Electronics

TITLE

RJ45 TOP ENTRY PCB JACK(W/LED)

DFTO : KURT	DRAWING NO. CE5288-XX0XXX-L	SIZE A3	REV 0
DATE : 06/27/2012	/PART NO. E5288-3A0C02-L		
SCALE : 1.5:1	DO NOT SCALE DRAWING	SHEET 1 OF 1	