Ratings
Voltage: 300 V
Temperature: -40~105 °C
Flammability: VW-1

Conductor
Conductor count: 2
Gauge: 20 AWG 0.52 mm²
Material: tinned copper strands
Strand size: ∅0.127 x 41
Resistance at 20 °C: 36.7 Ω /km max

Insulator
Material: FEP
Color: red, black
Diameter: ∅1.25 ±0.10
Nominal thickness: 0.13 mm
Resistance at 20 °C: 10 MΩ /km min

Shield
Material: tinned copper strands
Strand size: ∅0.08 mm, 85% min coverage

Outer jacket
Material: TPE, 78A
Color: black, matte
Diameter: ∅4.1 ±0.20
Nominal thickness: 0.6 mm

Wire marking: E339579 UL AWM STYLE 21296 20 AWG 105°C 300V VW-1 - - - cUL AWM I A 105°C 300V FT1 TENSILITY DGT

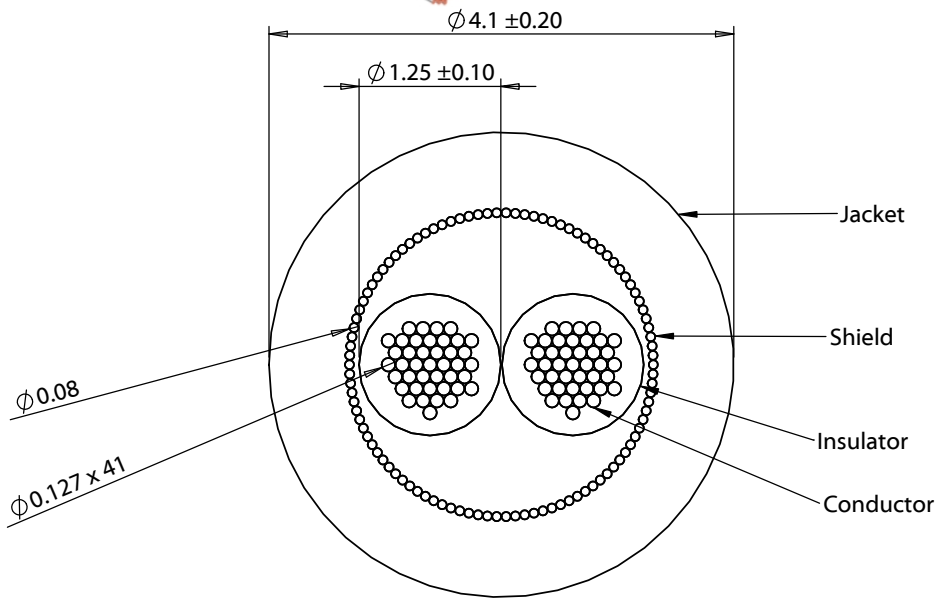

Revision:	Date:	Description:
A	10/26/2021	Initial release

Prepared: MP Digitally signed by MP Date: 2021.11.01 16:15:08 -07'00'

Verified: JD Digitally signed by JD Date: 2021.11.03 09:59:20 -07'00'

Dimensions are in millimeters.
Tolerances:
X: ± 0.5 mm
X.X: ± 0.3 mm
X.XX: ± 0.05 mm

Notes:

RoHS compliant
Phthalate free
Function test: no open, no short circuit, no intermittent

Description:

Wire, 2C TS, 20 AWG, UL 21296, 300V, 105C, 4.1 mm, shielded, VW-1, TPE

TENSILITY
tel 1.541.323.3228 800 877.670.7118
fax 1.541.323.4202 web tensility.com

Size: A
Part number: 30-02411
Scale: 15:1
Sheet 1 of 1

To see a custom version of this cable assembly, call Tensility at 541-323-3228 or email engineering@tensility.com

5 4 3 2 1