## 3-POLE

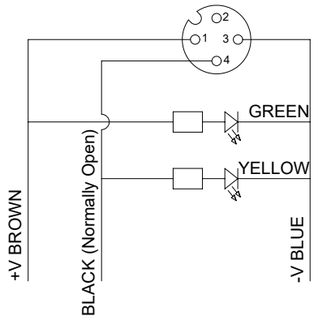


## 4-POLE

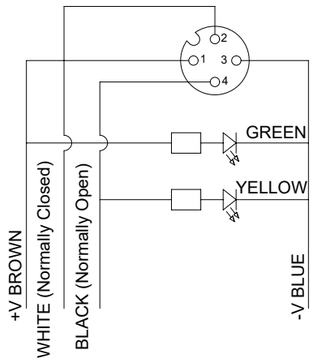


| FEMALE FACE VIEW | FEMALE FACE VIEW |
|---|---|
| 3-POLE | 4-POLE |
| 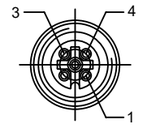 | 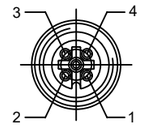 |
| WIRING DIAGRAM | WIRING DIAGRAM |
| 1 BROWN<br>2 NOT USED<br>3 BLUE<br>4 BLACK | 1 BROWN<br>2 WHITE<br>3 BLUE<br>4 BLACK |

## PART No MATRIX

| 8 | 0 | X | 0 | P | 1 | X | X | X | M | X | X | X | X |
|---|---|---|---|---|---|---|---|---|---|---|---|---|---|

- 8=Micro Change
- 0= Portable Change
- 3=3 Core, 4=4 Core
- 0P1 = PNP female 90°
- CABLE TYPES
- M=Metres, F=Feet
- LENGTH: 020=2 METRES, 050=5 METRES, 200=20 METRES
- OPTIONS

COUPLING NUT
blank and 3-standard (BRASS)
1 - STAINLESS STEEL
5 - DELRIN
7 - TEFLON COAT
H=ID CARRIER

E02 = 0,25mm², PVC black
E03 = 0,34mm², PVC black
E13 = 0,75mm², PVC yellow
E52 = 0,34mm², PVC grey (RAL7001)
E57 = 0,34mm², PVC grey (RAL7001)
H09 = 0,34mm², PUR black
H69 = 0,2mm², PUR grey LSOH SCR
I02 = 0,25mm², PVC grey CEI
I03 = 0,34mm², PVC grey CEI
I20 = 0,34mm², PVC grey CEI SCR DC
I26 = 0,34mm², PVC grey CEI SCR AC
P02 = 0,25mm², PUR/PVC black
P03 = 0,34mm², PUR/PVC black
P08 = 0,25mm², PUR yellow HIFLEX
P20 = 0,34mm², PUR black LSOH braid
P82 = 0,34mm², PUR orange irradiated DC
S20 = 0,34mm², PVC yellow SJTO braid
S26 = 0,34mm², PVC yellow SJTO braid AC

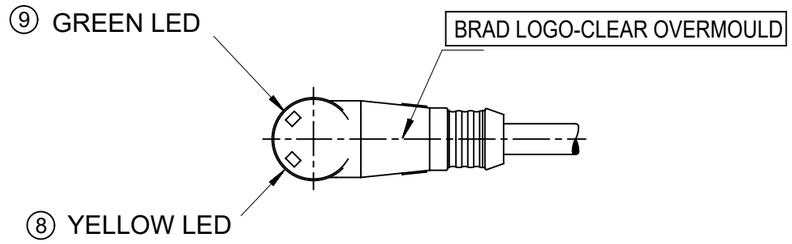


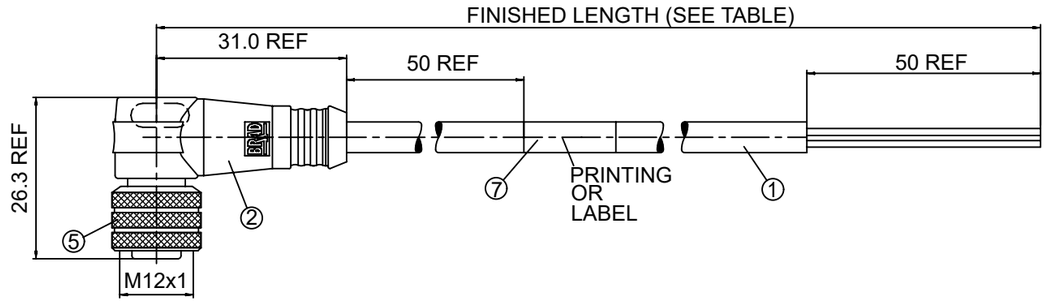


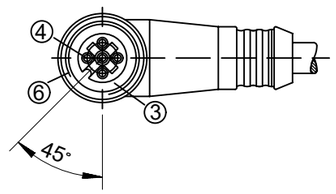


FRONT SIDE VIEW

| Table of lenght tolerances | | |
|---|---|---|
| Over | Up to and including | Tolerance (+) |
| 0 | 305 | +19 |
| 305 | 915 | +45 |
| 915 | 1830 | +56 |
| 1830 | 3660 | +89 |
| 3660 | 7320 | +165 |
| 7320 | 14640 | +317 |
| 14640 | 30500 | +610 |
| 30500 | > | +2% of lenght |

## CONNECTOR SPECIFICATION:

| | |
|---|---|
| VOLTAGE RATING | 10 TO 30VDC |
| AMPERAGE RATING | max. 4 AMPS |
| PROTECTION | IP67 |
| OPERATING TEMPERATURE | FLEXING: -5°C TO +90°C<br>STATIC: -30°C TO +90°C |

| ITEM | COMPONENT | MATERIAL | FINISH |
|---|---|---|---|
| 9 | LED | | GREEN |
| 8 | LED | | YELLOW |
| 7 | LABEL | --- | --- |
| 6 | O-RING | VITON | RED |
| 5 | COUPLER | --- | --- |
| 4 | PIN CONTACT | COPPER ALLOY | --- |
| 3 | INSERT | PUR | BLACK |
| 2 | OVERMOLD | PUR | NATURAL |
| 1 | CABLE | SEE TABLE | BLACK |

| DOCUMENT STATUS | P1 | RELEASE DATE | 2023/02/24 12:54:48 |
|---|---|---|---|

THIS DRAWING CONTAINS INFORMATION THAT IS PROPRIETARY TO MOLEX ELECTRONIC TECHNOLOGIES, LLC AND SHOULD NOT BE USED WITHOUT WRITTEN PERMISSION

| DIMENSION UNITS | SCALE |
|---|---|
| mm | NTS |

GENERAL TOLERANCES (UNLESS SPECIFIED)

| | MM | INCH |
|---|---|---|
| 4 PLACES | ± | ± |
| 3 PLACES | ± | ± |
| 2 PLACES | ± | ± |
| 1 PLACE | ± | ± |
| 0 PLACES | ± | ± |
| ANGULAR TOL | ± 1.0 ° | |

DRAFT WHERE APPLICABLE MUST REMAIN WITHIN DIMENSIONS

CURRENT REV DESC: REMOVED OBSOLETED PART NUMBERS AS PER PCN#510806.

EC NO: 733771
DRWN: LIKITV 2023/01/12
CHK'D: GGA 2023/02/24
APPR: GGA 2023/02/24

INITIAL REVISION:
DRWN: HWALCZAK 2012/11/24
APPR: MIWASIECZKO 2013/01/15

FIRST ANGLE PROJECTION | DRAWING: A3-SIZE | SERIES: 120067

molex

CSE M12 PNP XP AC FE
RA XM SE

PRODUCT CUSTOMER DRAWING

| DOCUMENT NUMBER | DOC TYPE | DOC PART | REVISION |
|---|---|---|---|
| SD-120067-035 | PSD | 001 | B1 |

| MATERIAL NUMBER | CUSTOMER | SHEET NUMBER |
|---|---|---|
| SEE TABLE | GENERAL MARKET | 1 OF 2 |

FORMAT: Met-lega-master-tb-prod-A3
REVISION: E1
DATE: 2021/05/01

# TABLE

| | |
|---|---|
| 1200675067 | 8030P1E03M020 |
| 1200675059 | 8030P1E03M030 |
| 1200675060 | 8030P1E03M050 |
| 1200678020 | 8030P1E03M0501 |
| 1200678326 | 8030P1E03M050H |
| 1200675061 | 8030P1E03M100 |
| 1200678259 | 8030P1E03M150 |
| 1200678021 | 8030P1E03M2005 |
| 1200675027 | 8030P1E52M020 |
| 1200675025 | 8030P1E52M050 |
| 1200675026 | 8030P1E52M100 |
| 1200678308 | 8030P1H09M020 |
| 1200678310 | 8030P1H09M050 |
| 1200678006 | 8030P1H09M050H |
| 1200678311 | 8030P1H09M100 |
| 1200678007 | 8030P1H09M100H |
| 1200675009 | 8030P1I03M020 |
| 1200675093 | 8030P1I03M025 |
| 1200678144 | 8030P1I03M030 |
| 1200675010 | 8030P1I03M050 |
| 1200678210 | 8030P1I03M060 |
| 1200675011 | 8030P1I03M100 |
| 1200678145 | 8030P1I20M020 |
| 1200678026 | 8030P1I20M060 |
| 1200675068 | 8030P1I20M120 |
| 1200678029 | 8030P1P03M010 |
| 1200678030 | 8030P1P03M0101 |
| 1200675069 | 8030P1P03M020 |
| 1200678031 | 8030P1P03M0201 |
| 1200678032 | 8030P1P03M030 |
| 1200678147 | 8030P1P03M030H |
| 1200675002 | 8030P1P03M050 |
| 1200675082 | 8030P1P03M050H |
| 1200678197 | 8030P1P03M075 |

| | |
|---|---|
| 1200060366 | 8030P1P03M100 |
| 1200675083 | 8030P1P03M100H |
| 1200678033 | 8030P1P03M150 |
| 1200678035 | 8030P1P09M050 |
| 1200678234 | 8030P1P09M100 |
| 1200678036 | 8030P1P09M150 |
| 1200675029 | 8030P1P82M020 |
| 1200675022 | 8030P1P82M050 |
| 1200678038 | 8030P1S20M010 |
| 1200678248 | 8030P1S20M0101 |
| 1200678039 | 8030P1S20M020 |
| 1200678040 | 8030P1S20M030 |
| 1200675012 | 8030P1S20M050 |
| 1200678192 | 8030P1S20M050H |
| 1200678172 | 8030P1S20M1001 |
| 1200675013 | 8030P1S20M2001 |
| 1200678384 | 8040P1E02M100 |
| 1200678304 | 8040P1E03M010 |
| 1200675014 | 8040P1E03M020 |
| 1200675015 | 8040P1E03M030 |
| 1200678303 | 8040P1E03M040 |
| 1200060611 | 8040P1E03M050 |
| 1200675073 | 8040P1E03M100 |
| 1200678258 | 8040P1E03M150 |
| 1200678282 | 8040P1E03M200 |
| 1200678309 | 8040P1H09M020 |
| 1200678312 | 8040P1H09M050 |
| 1200678008 | 8040P1H09M050H |
| 1200678313 | 8040P1H09M100 |
| 1200678009 | 8040P1H09M100H |
| 1200678306 | 8040P1I03M010 |
| 1200678044 | 8040P1I03M020 |
| 1200678045 | 8040P1I03M030 |

| | |
|---|---|
| 1200678307 | 8040P1I03M040 |
| 1200670293 | 8040P1I03M050 |
| 1200670292 | 8040P1I03M100 |
| 1200658616 | 8040P1P03M010 |
| 1200060618 | 8040P1P03M020 |
| 1200651777 | 8040P1P03M030 |
| 1200658621 | 8040P1P03M040 |
| 1200678150 | 8040P1P03M050H |
| 1200675017 | 8040P1P03M100 |
| 1200678151 | 8040P1P03M100H |
| 1200678046 | 8040P1P03M150 |
| 1200678305 | 8040P1P82M0207 |
| 1200678010 | 8040P1S20M010 |
| 1200678201 | 8040P1S20M020 |
| 1200678051 | 8040P1S20M020H |
| 1200675086 | 8040P1S20M030 |
| 1200675024 | 8040P1S20M040H |
| 1200675018 | 8040P1S20M050 |
| 1200675023 | 8040P1S20M100 |
| 1200675019 | 8040P1S20M1001 |
| 1200678053 | 8040P1S20M100H |
| 1200678265 | 8040P1S20M200 |
| 1200675074 | 8040P1S20M2001 |

THIS DRAWING CONTAINS INFORMATION THAT IS PROPRIETARY TO MOLEX ELECTRONIC TECHNOLOGIES, LLC AND SHOULD NOT BE USED WITHOUT WRITTEN PERMISSION

| DIMENSION UNITS | SCALE |
|---|---|
| mm | NTS |

GENERAL TOLERANCES (UNLESS SPECIFIED)

| | MM | INCH |
|---|---|---|
| 4 PLACES | ± | ± |
| 3 PLACES | ± | ± |
| 2 PLACES | ± | ± |
| 1 PLACE | ± | ± |
| 0 PLACES | ± | ± |
| ANGULAR TOL | ± 1.0 ° | |

DRAFT WHERE APPLICABLE MUST REMAIN WITHIN DIMENSIONS

CURRENT REV DESC: REMOVED OBSOLETED PART NUMBERS AS PER PCN#510806.

EC NO: 733771
DRWN: LIKITV 2023/01/12
CHK'D: GGA 2023/02/24
APPR: GGA 2023/02/24

INITIAL REVISION:
DRWN: HWALCZAK 2012/11/24
APPR: MIWASIECZKO 2013/01/15

molex

CSE M12 PNP XP AC FE
RA XM SE

PRODUCT CUSTOMER DRAWING

| DOCUMENT NUMBER | DOC TYPE | DOC PART | REVISION |
|---|---|---|---|
| SD-120067-035 | PSD | 001 | B1 |

| FIRST ANGLE PROJECTION | DRAWING | SERIES | MATERIAL NUMBER | CUSTOMER | SHEET NUMBER |
|---|---|---|---|---|---|
| | A3-SIZE | 120067 | SEE TABLE | GENERAL MARKET | 2 OF 2 |

| DOCUMENT STATUS | P1 | RELEASE DATE | 2023/02/24 12:54:48 |
|---|---|---|---|

FORMAT: Met-lega-master-tb-prod-A3
REVISION: E1
DATE: 2021/05/01