| INDEX | |
|---|---|
| PAGE TITLE | PAGE |
| TITLE BLOCK | 1 |
| REVISION BLOCK | 2 |
| PART BLOCK | 3 |
| KPC BLOCK | 4 |
| COMPONENT TABLE | 5 |
| NOTES | 6 |
| NOTES | 7 |
| WIRE DRESS PACKAGING DIMENSIONS | 8 |
| LOCATION AND PACKAGING DIMENSIONS REFERENCING INTERFACE DATUMS B & C | 9 |
| LOCATION AND PACKAGING DIMENSIONS REFERENCING INTERFACE DATUM A | 10 |
| KEY ID REF - WIRE DRESS OPTION 0 | 11 |
| KEY ID REF - WIRE DRESS OPTION 9 | 12 |
| CIRCUIT CONFIGURATIONS | 13 |
| CIRCUIT CONFIGURATIONS | 14 |
| COMPONENT CONNECTOR INTERFACE | 15 |
| COMPONENT CONNECTOR INTERFACE | 16 |
| COMPONENT CONNECTOR INTERFACE | 17 |
| COMPONENT CONNECTOR INTERFACE | 18 |
| COMPONENT CONNECTOR INTERFACE | 19 |
| COMPONENT CONNECTOR INTERFACE | 20 |
| COMPONENT CONNECTOR INTERFACE | 21 |

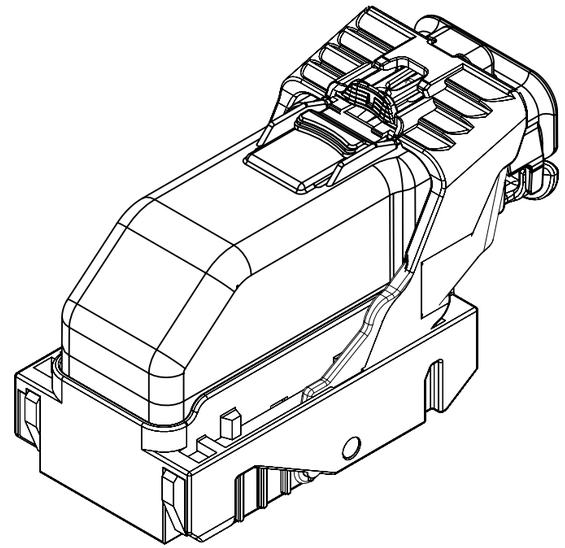

ISO VIEW

GM

**UNLESS OTHERWISE SPECIFIED:** THIS DOCUMENT IS IN ACCORDANCE WITH ASME Y14.5M-1994 AS AMMENDED BY THE GM GLOBAL DIMENSIONING AND TOLERANCING ADDENDUM-1997. ALL GEOMETRIC TOLERANCES AND RELATED DATUMS APPLY RFS. RULE #1 (PERFECT FORM AT MMC) DOES NOT APPLY WHEN A RELATIONSHIP BETWEEN FEATURES IS ESTABLISHED BY ORIENTATION OR LOCATION TOLERANCES. SEPARATE POSITION CALLOUTS MAY BE GAGED SEPARATELY REGARDLESS OF DATUM REFERENCES.

CHANGE RESTRICTED
NO MANUAL CHANGES

DO NOT SCALE

METRIC

DIMENSIONS SHOWN IN MILLIMETERS UNLESS OTHERWISE SPECIFIED

REFERENCE
12H (MOLEX AUTOMOTIVE)

| | | DATE |
|---|---|---|
| DRAFTER | J SZYMKOWSKI | 22DE05 |
| APVD1 | D PFAFFINGER | 22DE05 |
| APVD2 | B BURT | 22DE05 |
| APVD3 | | |
| APVD4 | | |
| APVD5 | | |

DRAWING NAME
HARNESS CONN ASM
66/73/80 CKTS

DRAWING NUMBER
12642695

| DWG STATUS | | |
|---|---|---|
| ST | REV | PDI |
| R | 002 | |

PAGE NUMBER
1 OF 21

| PAGE | DWG STATUS | | | | | REVISION HISTORY | AUTH | DR | CK | ENG |
|---|---|---|---|---|---|---|---|---|---|---|
| | DATE | ST | REV | CHG | PDI | | | | | |
| | 19DE11 | R | 001 | | | RELEASED TO PRODUCTION AT DLS A | CRMRJB | SC | MRO | GF |
| 3 | 08MY15 | R | 002 | A | | REORDERED PART BLOCK AND ADDED MASS<br>CORRECTED P/N TYPO FROM 12562676<br>TO 12582676 | | | | |
| 3, 5 | | R | 002 | B | | ADDED 12659312, 12659313, 12653574 AND 12653575 | | | | |
| 6 | | R | 002 | C | | REMOVED NOTE 1 . D . 3 . C | | | | |
| 20 | | R | 002 | D | | DIM 125 WAS 3.25<br>DIM 131 WAS 5.5 | CRMRJD | DFK | MRO | GF |

| PAGE | DWG STATUS | | | | | REVISION HISTORY | AUTH | DR | CK | ENG |
|---|---|---|---|---|---|---|---|---|---|---|
| | DATE | ST | REV | CHG | PDI | | | | | |

| | | PAGE TITLE | | DRAWING NUMBER | DWG STATUS | | | PAGE NUMBER |
|---|---|---|---|---|---|---|---|---|
| | GM | REVISION BLOCK | | 12642695 | ST | REV | PDI | 2 OF 21 |
| | | | | | R | 002 | | |

002A 002B

| | | | | | | | | | | |
|---|---|---|---|---|---|---|---|---|---|---|
| 30 | RD | 12582676 | | C | 003 | | 0.011 | WIRE HARNESS COVER | 66/73/80 WAY |
| 29 | RD | AMJ29214 | | C | 003 | | 0.050 | HARN CONN ASM 80 CKT | KEY M OPTION 9 |
| 28 | RD | AMJ29136 | | C | 003 | | 0.050 | HARN CONN ASM 80 CKT | KEY L OPTION 9 |
| 27 | RD | AMJ29117 | | C | 003 | | 0.050 | HARN CONN ASM 80 CKT | KEY K OPTION 9 |
| 26 | RD | 12615657 | | C | 003 | | 0.050 | HARN CONN ASM 80 CKT | KEY J OPTION 9 |
| 25 | RD | 12603599 | | C | 003 | | 0.050 | HARN CONN ASM 80 CKT | KEY H OPTION 9 |
| 24 | RD | 12603598 | | C | 003 | | 0.050 | HARN CONN ASM 80 CKT | KEY G OPTION 9 |
| 23 | RD | AMJ28669 | | C | 003 | | 0.050 | HARN CONN ASM 80 CKT | KEY M OPTION 0 |
| 22 | RD | AMJ29057 | | C | 003 | | 0.050 | HARN CONN ASM 80 CKT | KEY L OPTION 0 |
| 21 | RD | AMJ28595 | | C | 003 | | 0.050 | HARN CONN ASM 80 CKT | KEY K OPTION 0 |
| 20 | RD | 12615656 | | C | 003 | | 0.050 | HARN CONN ASM 80 CKT | KEY J OPTION 0 |
| 19 | RD | 12588058 | | C | 004 | | 0.050 | HARN CONN ASM 80 CKT | KEY H OPTION 0 |
| 18 | RD | 12588057 | | C | 003 | | 0.050 | HARN CONN ASM 80 CKT | KEY G OPTION 0 |
| 17 | RD | 12653575 | | C | 002 | | 0.050 | HARN CONN ASM 73 CKT | KEY F OPTION 9 |
| 16 | RD | AMJ28698 | | C | 003 | | 0.050 | HARN CONN ASM 73 CKT | KEY E OPTION 9 |
| 15 | RD | 12647269 | | C | 002 | | 0.050 | HARN CONN ASM 73 CKT | KEY D OPTION 9 |
| 14 | RD | 12615655 | | C | 003 | | 0.050 | HARN CONN ASM 73 CKT | KEY C OPTION 9 |
| 13 | RD | 12603597 | | C | 005 | | 0.050 | HARN CONN ASM 73 CKT | KEY B OPTION 9 |
| 12 | RD | 12603596 | | C | 006 | | 0.050 | HARN CONN ASM 73 CKT | KEY A OPTION 9 |
| 11 | RD | 12653574 | | C | 002 | | 0.050 | HARN CONN ASM 73 CKT | KEY F OPTION 0 |
| 10 | RD | AMJ28633 | | C | 003 | | 0.050 | HARN CONN ASM 73 CKT | KEY E OPTION 0 |
| 09 | RD | 12647268 | | C | 002 | | 0.050 | HARN CONN ASM 73 CKT | KEY D OPTION 0 |
| 08 | RD | 12615654 | | C | 005 | | 0.050 | HARN CONN ASM 73 CKT | KEY C OPTION 0 |
| 07 | RD | 12582678 | | C | 008 | | 0.050 | HARN CONN ASM 73 CKT | KEY B OPTION 0 |
| 06 | RD | 12582677 | | C | 010 | | 0.050 | HARN CONN ASM 73 CKT | KEY A OPTION 0 |
| 05 | RD | 12659313 | | 2 | 001 | | 0.050 | HARN CONN ASM 66 CKT | KEY C OPTION 9 |
| 04 | RD | 12642693 | | C | 002 | | 0.050 | HARN CONN ASM 66 CKT | KEY A OPTION 9 |
| 03 | RD | 12659312 | | 2 | 001 | | 0.050 | HARN CONN ASM 66 CKT | KEY C OPTION 0 |
| 02 | RD | 12642692 | | C | 003 | | 0.050 | HARN CONN ASM 66 CKT | KEY A OPTION 0 |
| 01 | RD | 12642695 | | A | | 002 | 3.408 | HARNESS CONN ASM | |
| | | | | | | | | DRAWING | |

| HIERARCHY /QUANTITY | DWG ITM | DWG RLTN SHIP | PART NUMBER | P-A ITM | D L S | ST | REV | P D I | N M C I | MASS (KG) | PART NAME | NOTES |
|---|---|---|---|---|---|---|---|---|---|---|---|---|

PARTS SHOWN ON DRAWING

| | PAGE TITLE | | DRAWING NUMBER | DWG STATUS | | | PAGE NUMBER |
|---|---|---|---|---|---|---|---|
| GM | PART BLOCK | | 12642695 | ST | REV | PDI | 3 OF 21 |
| | | | | R | 002 | | |

# KEY PRODUCT CHARACTERISTICS
# (IN ACCORDANCE WITH QN 1805 OR QN 1050)

▽ SAFETY/COMPLIANCE

◇ FIT/FUNCTION

| TOTAL ON DRAWING | 5 |
|---|---|
| LAST NO. USED | 5 |

| NO | TYPE | DESCRIPTION | RATIONALE | PAGE/ZONE |
|---|---|---|---|---|
| 1 | F/F | 32.68 | IMPROVE CONNECTOR SYSTEM MATING | 15 |
| 2 | F/F | 29.00 | INSURE PROPER RELEASE OF LEVER | 15 |
| 3 | F/F | 15.25 | INSURE FINAL MATE POSITION | 16 |
| 5 | F/F | POSITIONAL TOLERANCE (2 PLACES) | INSURE CONNECTOR SYSTEM MATEABILITY | 19 |

| | | | | | APPLICABLE COMPONENTS | | | | | |
|---|---|---|---|---|---|---|---|---|---|---|
| LINE | MFG. | MFG. P/N | GM P/N | EFFECTIVE DATE | DESCRIPTION | KEY OPTION | WIRE DRESS OPTION | KEY CONFIG. | COLOR | STATUS |
| - | | | | | | | | | | |
| 1 | MOLEX | 34565-0003 | 12582676 | 02JN03 | MX123 DRESS COVER 66/73/80 CKT | N/A | N/A | N/A | BLACK | AVAILABLE |
| 2 | MOLEX | 34822-0013 | 12642692 | 01SP13 | MX123 HRNS CONN ASSY 66 CKT | A | 0 | 1458 | BLACK | AVAILABLE |
| 3 | MOLEX | 34822-0033 | 12659312 | 01SP13 | MX123 HRNS CONN ASSY 66 CKT | C | 0 | 2467 | BLUE | AVAILABLE |
| 4 | MOLEX | 34822-0023 | 12642693 | 01SP13 | MX123 HRNS CONN ASSY 66 CKT | A | 9 | 1458 | BLACK | AVAILABLE |
| 5 | MOLEX | 34822-0043 | 12659313 | 01SP13 | MX123 HRNS CONN ASSY 66 CKT | C | 9 | 2467 | BLUE | AVAILABLE |
| 6 | MOLEX | 34566-0103 | 12582677 | 11JN04 | MX123 HRNS CONN ASSY 73 CKT | A | 0 | 1458 | BLACK | AVAILABLE |
| 7 | MOLEX | 34566-0203 | 12582678 | 11JN04 | MX123 HRNS CONN ASSY 73 CKT | B | 0 | 1468 | ST GRAY | AVAILABLE |
| 8 | MOLEX | 34566-0303 | 12615654 | 09AP08 | MX123 HRNS CONN ASSY 73 CKT | C | 0 | 2467 | BLUE | AVAILABLE |
| 9 | MOLEX | 34566-0403 | 12647268 | T.B.D | MX123 HRNS CONN ASSY 73 CKT | D | 0 | 2367 | BROWN | NOT ACTIVE |
| 10 | MOLEX | 34566-0503 | AMJ28633 | T.B.D | MX123 HRNS CONN ASSY 73 CKT | E | 0 | 2468 | GREEN | NOT ACTIVE |
| 11 | MOLEX | 34566-0603 | 12653574 | 05DC14 | MX123 HRNS CONN ASSY 73 CKT | F | 0 | 1357 | NATURAL | AVAILABLE |
| 12 | MOLEX | 34566-0703 | 12588057 | 09AP08 | MX123 HRNS CONN ASSY 80 CKT | G | 0 | 1358 | BLUE | AVAILABLE |
| 13 | MOLEX | 34566-0803 | 12588058 | 11JN04 | MX123 HRNS CONN ASSY 80 CKT | H | 0 | 2458 | ST GRAY | AVAILABLE |
| 14 | MOLEX | 34566-0903 | 12615656 | T.B.D | MX123 HRNS CONN ASSY 80 CKT | J | 0 | 2457 | BLACK | NOT ACTIVE |
| 15 | MOLEX | 34566-1003 | AMJ28595 | T.B.D | MX123 HRNS CONN ASSY 80 CKT | K | 0 | 2357 | BROWN | NOT ACTIVE |
| 16 | MOLEX | 34566-1103 | AMJ29057 | T.B.D | MX123 HRNS CONN ASSY 80 CKT | L | 0 | 2368 | GREEN | NOT ACTIVE |
| 17 | MOLEX | 34566-1203 | AMJ28669 | T.B.D | MX123 HRNS CONN ASSY 80 CKT | M | 0 | 2358 | NATURAL | NOT ACTIVE |
| 18 | MOLEX | 34566-1303 | 12603596 | 11JN04 | MX123 HRNS CONN ASSY 73 CKT | A | 9 | 1458 | BLACK | AVAILABLE |
| 19 | MOLEX | 34566-1403 | 12603597 | 11JN04 | MX123 HRNS CONN ASSY 73 CKT | B | 9 | 1468 | ST GRAY | AVAILABLE |
| 20 | MOLEX | 34566-1503 | 12615655 | 09AP08 | MX123 HRNS CONN ASSY 73 CKT | C | 9 | 2467 | BLUE | AVAILABLE |
| 21 | MOLEX | 34566-1603 | 12647269 | T.B.D | MX123 HRNS CONN ASSY 73 CKT | D | 9 | 2367 | BROWN | NOT ACTIVE |
| 22 | MOLEX | 34566-1703 | AMJ28698 | T.B.D | MX123 HRNS CONN ASSY 73 CKT | E | 9 | 2468 | GREEN | NOT ACTIVE |
| 23 | MOLEX | 34566-1803 | 12653575 | 05DC14 | MX123 HRNS CONN ASSY 73 CKT | F | 9 | 1357 | NATURAL | AVAILABLE |
| 24 | MOLEX | 34566-1903 | 12603598 | 09AP08 | MX123 HRNS CONN ASSY 80 CKT | G | 9 | 1358 | BLUE | AVAILABLE |
| 25 | MOLEX | 34566-2003 | 12603599 | 11JN04 | MX123 HRNS CONN ASSY 80 CKT | H | 9 | 2458 | ST GRAY | AVAILABLE |
| 26 | MOLEX | 34566-2103 | 12615657 | T.B.D | MX123 HRNS CONN ASSY 80 CKT | J | 9 | 2457 | BLACK | NOT ACTIVE |
| 27 | MOLEX | 34566-2203 | AMJ29117 | T.B.D | MX123 HRNS CONN ASSY 80 CKT | K | 9 | 2357 | BROWN | NOT ACTIVE |
| 28 | MOLEX | 34566-2303 | AMJ29136 | T.B.D | MX123 HRNS CONN ASSY 80 CKT | L | 9 | 2368 | GREEN | NOT ACTIVE |
| 29 | MOLEX | 34566-2403 | AMJ29214 | T.B.D | MX123 HRNS CONN ASSY 80 CKT | M | 9 | 2358 | NATURAL | NOT ACTIVE |
| 30 | MOLEX | 34736-2002 | 12642697 | 01AU10 | MX64 RCPT TERM Ag 18/20 GAGE B (RIGHT PAYOFF) | N/A | N/A | N/A | N/A | AVAILABLE |
| 31 | MOLEX | 34736-2001 | 12642696 | 01AU10 | MX64 RCPT TERM Ag 22 GAGE B (RIGHT PAYOFF) | N/A | N/A | N/A | N/A | AVAILABLE |
| 32 | MOLEX | 34586-0001 | T.B.D. | 11JN04 | MX123 0.64MM GROMMET PLUG | N/A | N/A | N/A | NATURAL | AVAILABLE |
| 33 | YAZAKI | 7116-4150-02 | 12588066 | 02JN03 | 2.8mm YESC SEALED FEMALE TERMINAL TIN 20/22 GAGE (CABLE RANGE 0.30mm-0.60mm) | N/A | N/A | N/A | N/A | NOT ACTIVE |
| 34 | YAZAKI | 7116-4151-02 | 12588067 | 02JN03 | 2.8mm YESC SEALED FEMALE TERMINAL TIN 16/18 GAGE (CABLE RANGE 0.75mm-1.40mm) | N/A | N/A | N/A | N/A | NOT ACTIVE |
| 35 | YAZAKI | 7116-4152-02 | 12582685 | 02JN03 | 2.8mm YESC SEALED FEMALE TERMINAL TIN 14 GAGE (CABLE RANGE 1.50mm-2.50mm) | N/A | N/A | N/A | N/A | AVAILABLE |
| 36 | YAZAKI | 7158-3111-60 | 12588068 | 02JN03 | 2.8mm CABLE SEAL (wire O.D. range 1.20mm-1.90mm) | N/A | N/A | N/A | GREEN | NOT ACTIVE |
| 37 | YAZAKI | 7158-3112-70 | 12588069 | 02JN03 | 2.8mm CABLE SEAL (wire O.D. range 1.80mm-2.30mm) | N/A | N/A | N/A | YELLOW | NOT ACTIVE |
| 38 | YAZAKI | 7158-3113-40 | 12582686 | 02JN03 | 2.8mm CABLE SEAL (wire O.D. range 2.18mm-3.00mm) | N/A | N/A | N/A | WHITE | AVAILABLE |
| 39 | YAZAKI | 7158-3114-90 | T.B.D | 02JN03 | 2.8mm YESC CAVITY PLUG | N/A | N/A | N/A | BLUE | AVAILABLE |
| 40 | MOLEX | 63811-4200 | XX019825 | 02JN03 | MX64 TERM HAND CRIMP TOOL | N/A | N/A | N/A | N/A | AVAILABLE |
| 41 | MOLEX | 63813-1400 | XX019826 | 02JN03 | MX64 TERM SERVICE TOOL | N/A | N/A | N/A | N/A | AVAILABLE |
| 42 | MOLEX | 63865-8000 | XX019827 | 02JN03 | MX64 CRIMP APPLICATOR with TOOL KIT 18/20 GAGE PAYOFF DIRECTION D (left payoff) (contact Molex for payoff detail) | N/A | N/A | N/A | N/A | AVAILABLE |
| 43 | MOLEX | 63865-8070 | XX019828 | 02JN03 | MX64 APPLICATOR TOOL KIT 18/20 GAGE | N/A | N/A | N/A | N/A | AVAILABLE |
| 44 | MOLEX | 63865-8100 | XX019829 | 02JN03 | MX64 CRIMP APPLICATOR with TOOL KIT 22 GAGE PAYOFF DIRECTION D (left payoff) (contact Molex for payoff detail) | N/A | N/A | N/A | N/A | AVAILABLE |
| 45 | MOLEX | 63865-8170 | XX019830 | 02JN03 | MX64 APPLICATOR TOOL KIT 22 GAGE | N/A | N/A | N/A | N/A | AVAILABLE |
| 46 | SPX | J35616-64 | T.B.D. | 02JN03 | 0.64mm PROBE TOOL (for rcpt) | N/A | N/A | N/A | N/A | AVAILABLE |
| 47 | SPX | J35616-64A | T.B.D. | 02JN03 | 0.64mm PROBE TOOL WITH EXT (for rcpt) | N/A | N/A | N/A | N/A | AVAILABLE |
| 48 | SPX | J35616-65 | T.B.D. | 02JN03 | 0.64mm PROBE TOOL WITH EXT (for pin) | N/A | N/A | N/A | N/A | AVAILABLE |
| 49 | SPX | J35616-4A | T.B.D. | 02JN03 | 2.8mm PROBE TOOL (for rcpt) | N/A | N/A | N/A | N/A | AVAILABLE |
| 50 | YAZAKI | X39899-J374 | 12094430 | 02JN03 | 2.8mm TERM SERVICE TOOL | N/A | N/A | N/A | N/A | AVAILABLE |

002B

* - MX123 DRESS COVER 73/80/66 CKT MATES TO ANY MX123 HARN CONN ASSY SHOWN ON TABLE ABOVE

# NOTES: UNLESS OTHERWISE SPECIFIED

1. MATERIAL FOR INTERFACE:

A. RESIN:
   1. 30% G.F. PBT; 20% MAX. (BY WEIGHT) REGRIND.
   2. MATING CONNECTOR INTERFACE PART COLOR MUST BE SAME AS MATCHING KEYED HARNESS CONNECTOR ASSEMBLY.
   3. MUST BE VALIDATED FOR INDIVIDUAL DEVICE APPLICATION REQUIREMENTS.

B. 0.64MM PINS:
   1. BASE MATERIAL: COPPER ALLOY; CONDUCTIVITY >= 28% IACS AT 20°C; TENSILE STRENGTH >= 635 N/mm²;SURFACE ROUGHNESS $R_a$ 6 MAX.
   2. PLATING FINISH: SILVER (Ag). PLATING TO BE 1.9-3.3 um ELECTRODEPOSITED SEMI-BRIGHT SILVER OVER 1.25-2.25 um DUCTILE SULPHAMATE NICKEL PER NOTE 1(D).
   3. ANTI-TARNISH: SYNTHETIC HYDROCARBON CONTACT SURFACE FINISH OR EQUIVALENT APPLIED WITHOUT VOID TO CONTACT AREA (MIN 3.7mm FROM PIN TIP).

C. 2.8MM BLADE:
   1. BASE MATERIAL: COPPER ALLOY; CONDUCTIVITY>= 28% IACS AT 20°C; TENSILE STRENGTH >= 350 N/mm²; SURFACE ROUGHNESS $R_a$ 6 MAX.
   2. PLATING FINISH: TIN. PLATING TO BE 2.5-5.0 um ELECTRODEPOSITED TIN, MATTE FINISH OVER 1.25-2.5um DUCTILE SULPHAMATE NICKEL PER NOTE 1(D).

D. PLATING REQUIREMENTS:

   1. SILVER PLATING
      a. 99.5% PURE SEMI-BRIGHT WITH NO ORGANIC BRIGHTNERS OR CHROMATES.

   2. NICKEL PLATING
      a. ELECTRODEPOSITED DUCTILE SULFAMATE NICKEL WITH A NON-BRIGHTENED FINISH. NO ORGANIC OR BRIGHTENING AGENTS SHALL BE ALLOWED.
      b. SHALL ONLY BE USED AS AN UNDERLYING PLATING AND MAY NOT BE USED AS AN ELECTRICAL CONTACT SURFACE PLATING.
      c. SHALL BE NODULE FREE WHEN VIEWED AT 10X MAGNIFICATION IN MEASURED IN CONTACT SURFACE AREA PLUS 0.5MM PERIMETER AROUND THE CONTACT SURFACE AREA.
      d. ALL PLATINGS SHALL HAVE A 1.0% MAXIMUM BY WEIGHT IMPURITIES. IMPURITIES ARE DEFINED AS ALL ELEMENTS NOT THE PRIMARY PLATING OR HARDENING AGENT IF APPLICABLE, AS DETERMINED BY WET CHEMICAL ANALYSIS OR AUGER METHOD. NO SINGLE IMPURITY SHALL EXCEED 0.1% MAXIMUM BY WEIGHT.

   3. TESTING
      a. THICKNESS TO BE MEASURED IN CONTACT SURFACE AREA PLUS 0.5MM PERIMETER AROUND THE CONTACT SURFACE AREA AS DESIGNATED IN THE DRAWING. THICKNESS SHALL BE DETERMINED BY METHOD OF X-RAY (XRF).
      b. PLATING ADHESION SHALL BE TESTED BY A BEND TEST FOR ALL METALS. THE TEST SAMPLE SHALL BE BENT 90 DEGREES TO DETERMINE DEPOSIT ADHESION. TESTING SHALL BE COMPLETED IN ACCORDANCE WITH ASTM SPEC B571.

002C

2. DESIGN - GENERAL:

A. THIS IS A 100% CAD GENERATED PART. THE CAD MATHEMATICAL DATA IS THE MASTER FOR THIS PART. FOR DIMENSIONAL OR ANY INFORMATION NOT SHOWN ON THIS DRAWING, ANALYZE THE CAD MODEL.
B. TOLERANCES:
   1. LINEAR  0.X ± 0.30
              0.XX ± 0.10
              0.XXX ± 0.10
   2. ANGULAR  X° ± 3°
   3. ⌓ | 1.0 | A | B | C
C. MINIMUM WALL THICKNESS REQUIRED: 1.3mm.
D. CORNERS SHOWN AS SHARP TO BE R 0.2 MAX.
E. LETTERING SHALL BE 0.15 MAX RAISED IN 0.20 MAX RECESS PAD. THIS INCLUDES MATERIAL CODE, RECYCLING CODE, CAVITY ID AND DATE CODE.
F-1. PARTS MUST BE FREE OF DISCOLORATION, SALT RESIDUE AND OTHER IMPERFECTIONS THAT AFFECT FIT OR FUNCTION.
F-2. SCRATCHES OR DENTS NOT TO EXCEED 0.013mm IN DEPTH.
G. FOLLOWING PRODUCTION CODES TO BE PERMANENTLY MARKED & HUMAN READABLE TO A LETTER HEIGHT OF 1.5 ±0.5MM X 0.3 MAX DEEP
   1. MATERIAL #: XXXXX-XXXX
   2. DATE CODE: JJJY (JULIAN DAY, LAST DIGIT OF YEAR)
   3. INSPECTION MACHINE CODE + SERIAL #: X_XXXXX

3. DESIGN - MANUFACTURING:

A. DRAFT TO BE WITHIN TOLERANCE.
B. ALLOWABLE FLASH MAX 0.2 HIGH X MAX 0.13 THICK.
C. ALLOWABLE PARTING LINE MISMATCH 0.2 MAX.
D. EJECTOR PINS MARK TO BE FLUSH TO 0.25 MAX DEPRESSED.
E. ALLOWABLE GATE VESTIGE FLUSH TO 0.25 MAX PROTRUSION.
F. NO EXTERNAL MOLD RELEASE AGENT ALLOWED DURING MANUFACTURING.
G. STEEL THAT FORMS THE INDICATED SURFACE MUST BE POLISHED WITH A DIAMOND FINISH (SPI A-2) OVER THE FULL PERIPHERY OF THE TOOL. SURFACE MUST HAVE NO MISMATCH.
H. ANY PROCESS LUBRICANT REMAINING ON THE TERMINAL MUST NOT VARNISH OR DEGRADE IT'S ELECTRICAL PERFORMANCE UP TO A MAXIMUM CLASS AMBIENT TEMPERATURE PER SAE USCAR-2 FOR 1008 HOURS. PROCESS LUBRICANTS SHOULD BE APPROVED BY THE RESPONSIBLE ENGINEER.
J. OPTIONAL FEATURES PROVIDED FOR AUTOMATION.
K. PART MUST BE FREE FROM BURRS AND SHARP EDGES, WHICH MIGHT BE DETRIMENTAL TO SATISFACTORY ASSEMBLY, SAFE HANDLING OR FUNCTION OF PART.
L. PARTS AS DELIVERED TO ASSEMBLY SHALL BE CLEAN AND FREE OF DEBRIS, RESIDUAL ABRASIVE MATERIAL AND CORROSION PRODUCTS ADVERESLY AFFECTING FUNCTION OR APPEARENCE.
M. RESTRICTED AND REPORTABLE SUBSTANCES FOR PARTS PER GMW3059.

# NOTES: UNLESS OTHERWISE SPECIFIED

4. SYSTEM REQUIREMENTS:

   A. HARNESS CONNECTOR IS COMPATIBLE WITH THE FOLLOWING SAE WIRE SIZE NO'S:
      14, MEETING SAE J1128
      18, MEETING SAE J1128, MAX O.D. OF 2.06 MM
      20, MEETING SAE J1128
      22, MEETING SAE J1128, MIN O.D. OF 1.47 MM

   B. CABLE TIE SPECIFICATIONS:
      1. CABLE TIE:
         TENSILE RATING: 220N / (50lbs) MIN
         TIE LENGTH: 186mm MIN
         TIE WIDTH: 4.75mm MAX
         MATERIAL: NYLON
      2. INSTALLATION:
         CABLE TIE TENSION: 190N MIN
      3. DRESSED WIRE BUNDLE PACKAGING: SEE FIG. 1

   C. WHEN MATED WITH COMPONENT CONNECTOR INTERFACE AND/OR DRESS COVER, HARNESS CONNECTOR SYSTEM CONFORMS TO THE FOLLOWING:
      1. SAE/USCAR-2, REV: 3 APRIL, 2001; CLASS 3
      2. FIELD CORRELATED LIFE TEST, SAE/USCAR-20, NOV. 2001
      3. GMW #3191 AUGUST 22, 2000 (DRAFT); TEMPERATURE CLASS 3, SEALING CLASS 1, VIBRATION CLASS 2
      4. RESTRICTED AND REPORTABLE CHEMICALS PER GMW #3059, REV: D AUGUST 2002
      5. TPA USER FORCES (FULLY POPULATED WITH TERMINALS)
         a. REMOVAL FROM LOCK TO PRE-SET: <=120N

   D. WIRE SPECIFICATIONS:
      1. WIRE SURFACE MUST BE FREE OF SCRATCHES, GROOVES OR DENTS WHERE FUNCTIONAL

5. TERMINAL CURRENT RATINGS:

   ALL TESTING DONE IN ACCORDANCE WITH USCAR-2 REV5 SECTION 5.3

   A. MX64 RCPT TERM
      1. MX64 RCPT TERM Ag 18/20 GAGE CRIMPED TO SAE WIRE SIZE NO.18 AND MATED TO MX123 0.64MM PIN: 11.3 AMPS
      2. MX64 RCPT TERM Ag 22 GAGE CRIMPED TO SAE WIRE SIZE NO.22 AND MATED TO MX123 0.64MM PIN:8.5 AMPS

| WIRE | CURRENT RATING | | | |
|---|---|---|---|---|
| | 23'C | 85'C | 105'C | 125'C |
| 18AWG | 11.3A | 11.3A | 9.5A | 6.6A |
| 20AWG | 10.0A | 10.0A | 8.3A | 5.7A |
| 22AWG | 8.6A | 8.6A | 7.1A | 5.0A |

   B. 2.8MM RCPT TERM
      1. 2.8MM RCPT TERM TIN 14 GAGE CRIMPED TO SAE WIRE SIZE NO.14 AND MATED TO MX123 2.8MM BLADE: 25.6 AMPS

6. CONTACT MOLEX AUTOMOTIVE FOR AVAILABLE CUSTOM PATTERNS OF CAVITIES OPEN FOR CIRCUITS

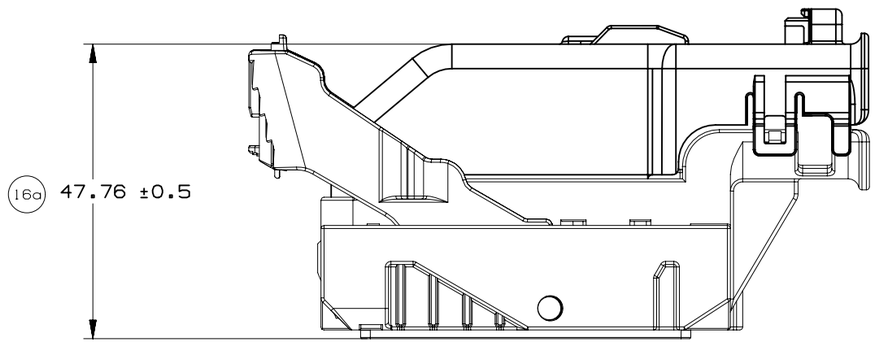


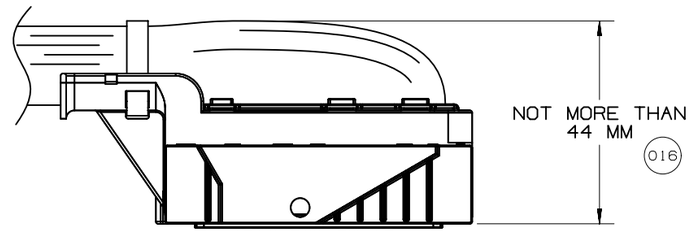


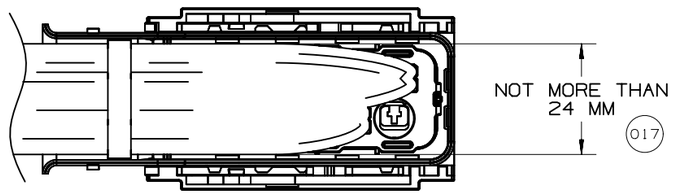


Fig. 1

| | | | | | | | |
|---|---|---|---|---|---|---|---|
| | GM | PAGE TITLE<br>WIRE DRESS PACKAGING DIMENSIONS | | DRAWING NUMBER<br>12642695 | DWG STATUS<br>ST: R / REV: 002 / PDI: | | PAGE NUMBER<br>8 OF 21 |

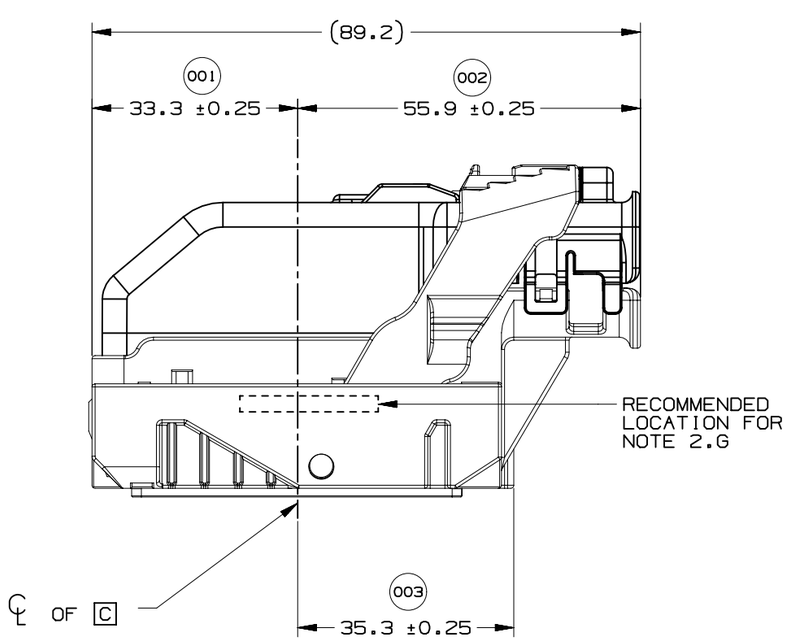


WIRE DRESS OPTION 0 SHOWN

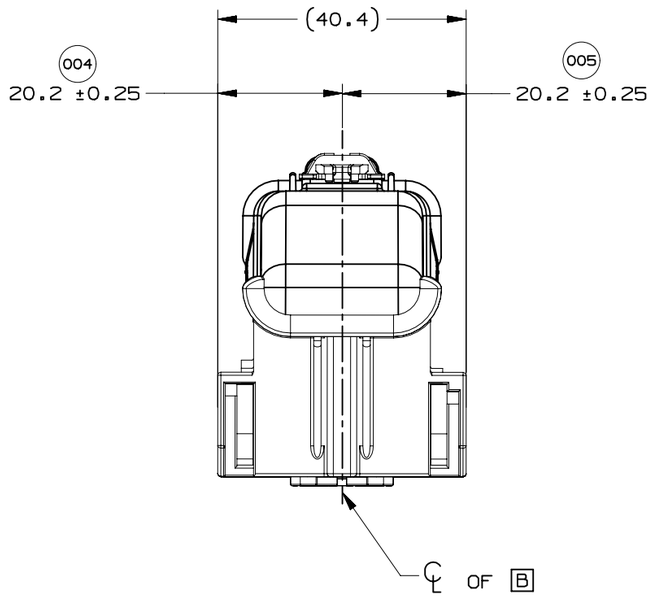


WIRE DRESS OPTION 0 SHOWN

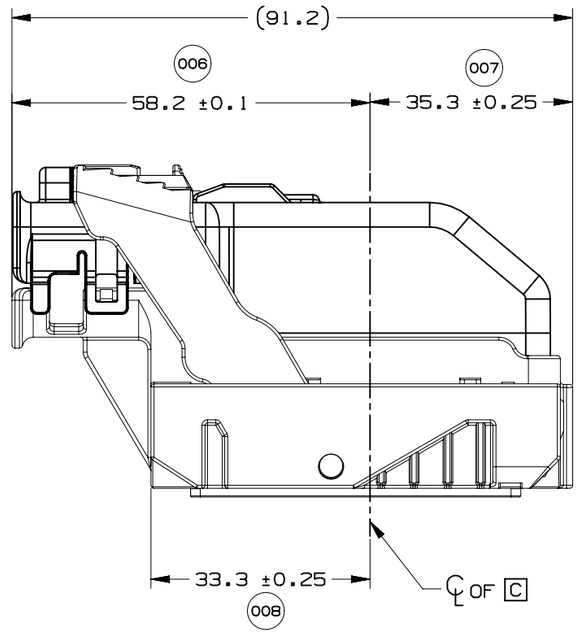


WIRE DRESS OPTION 9 SHOWN

| | | | | | | | |
|---|---|---|---|---|---|---|---|
| | GM | PAGE TITLE<br>LOCATION AND PACKAGING DIMENSIONS<br>REFERENCING INTERFACE DATUMS B & C | | DRAWING NUMBER<br>12642695 | DWG STATUS<br>ST: R / REV: 002 / PDI: | | PAGE NUMBER<br>9 OF 21 |

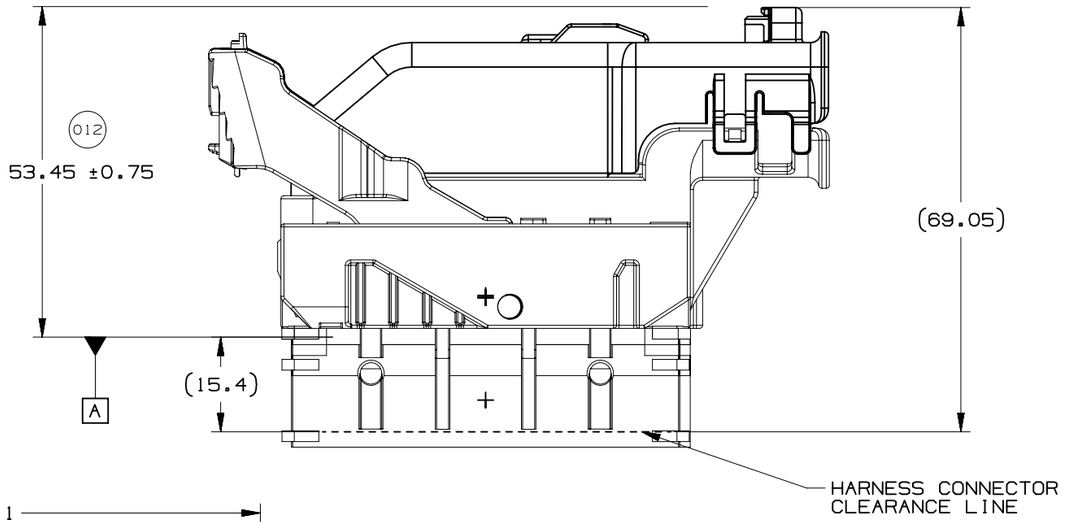


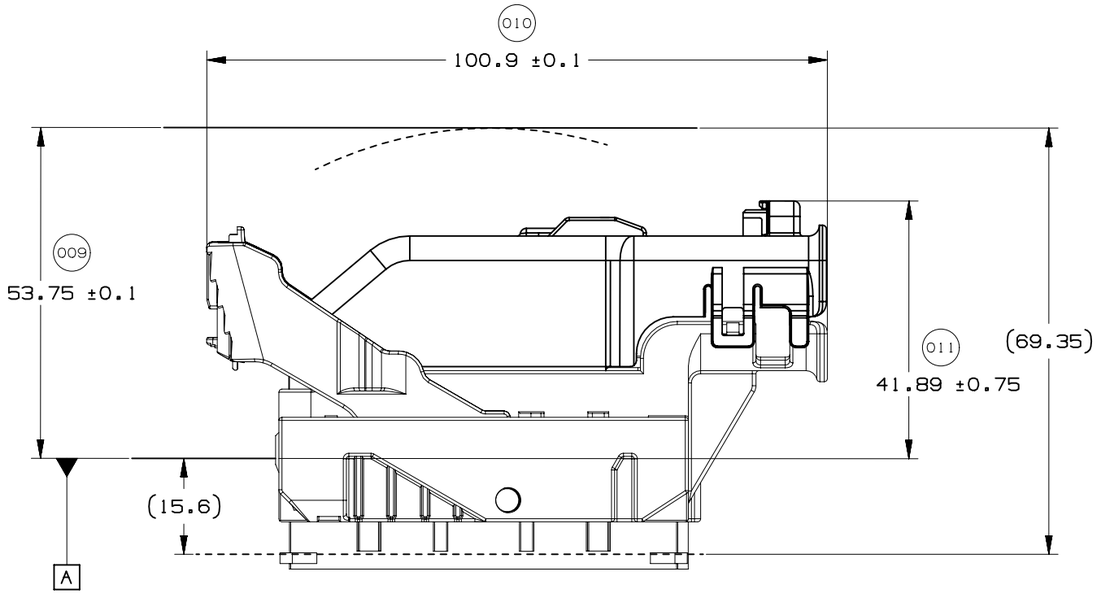


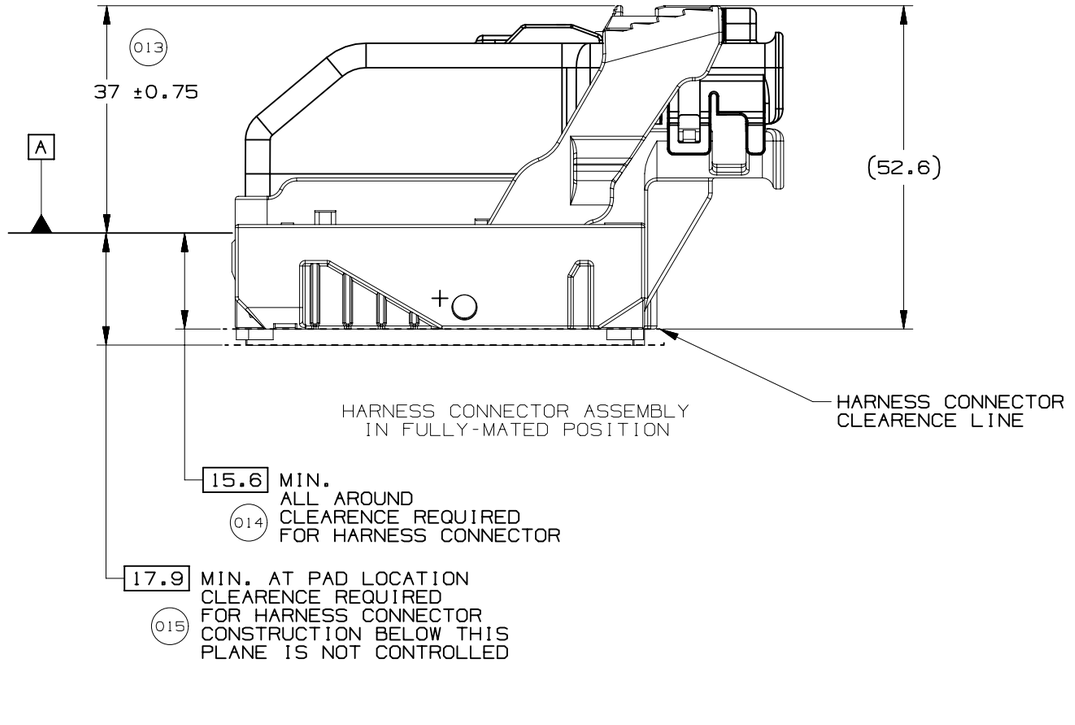


| | | | | | | |
|---|---|---|---|---|---|---|
| | GM | PAGE TITLE<br>LOCATION AND PACKAGING DIMENSIONS<br>REFERENCING INTERFACE DATUM A | | DRAWING NUMBER<br>12642695 | DWG STATUS<br>ST: R / REV: 002 / PDI: | PAGE NUMBER<br>10 OF 21 |

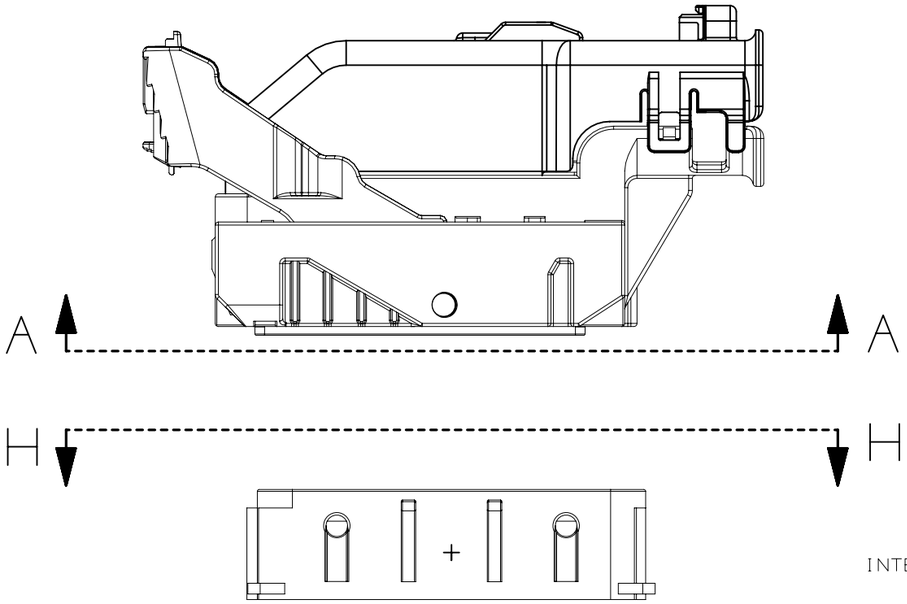


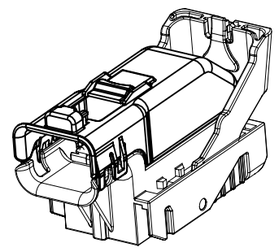

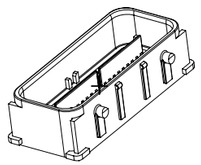

NOTE: REFERENCE THE COMPONENT TABLE FOR KEY OPTIONS AND CONFIGURATIONS

INTERFACE SIDE SHOWN ON ALL SECTION VIEWS

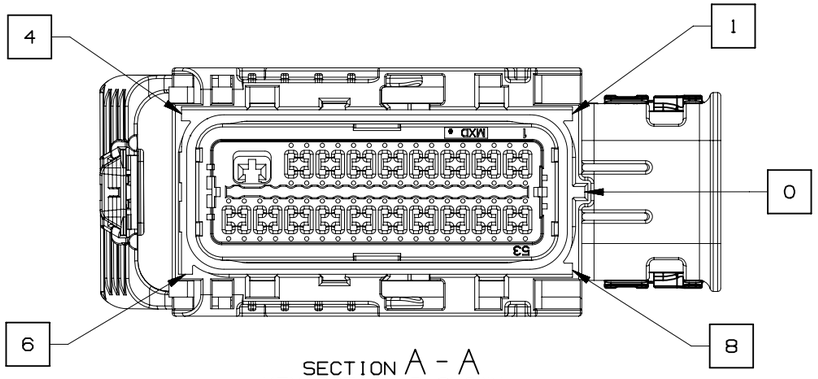


SECTION A - A
KEY OPTION B SHOWN

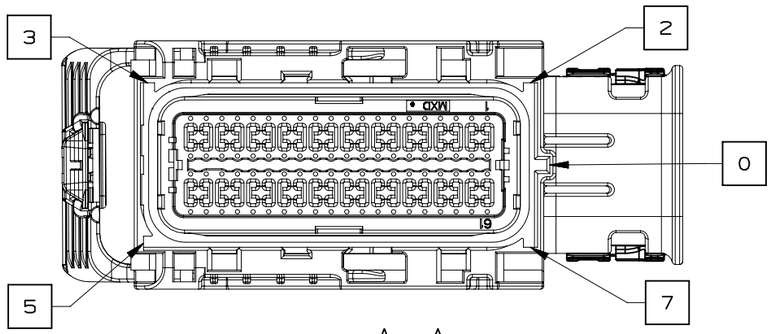


SECTION A - A
KEY OPTION K SHOWN

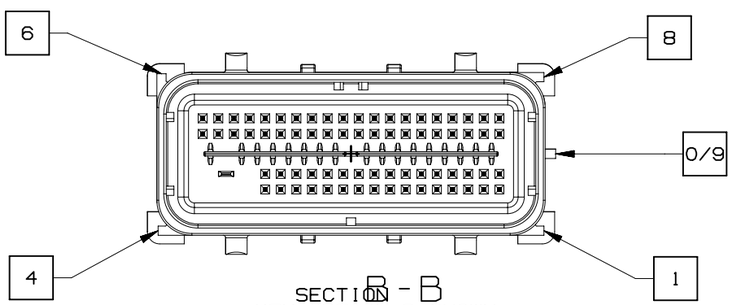


SECTION B - B
KEY OPTION B SHOWN

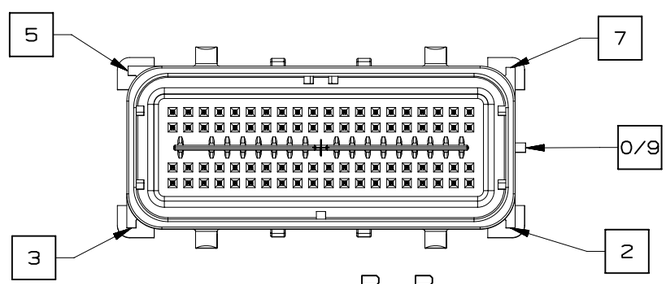


SECTION B - B
KEY OPTION K SHOWN

| | | | | | | | |
|---|---|---|---|---|---|---|---|
| | GM | PAGE TITLE: KEY ID REF - WIRE DRESS OPTION 0 | | DRAWING NUMBER: 12642695 | DWG STATUS ST: R | REV: 002 | PDI: | PAGE NUMBER: 11 OF 21 |

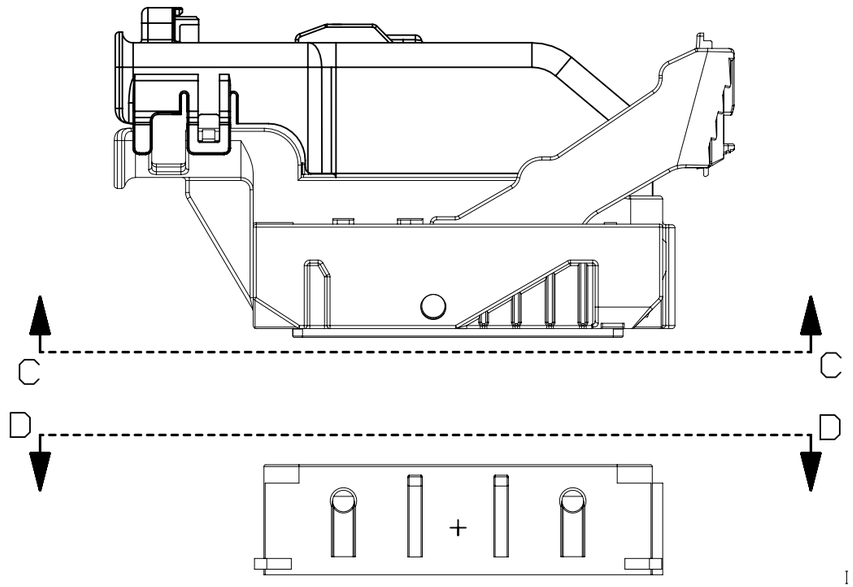


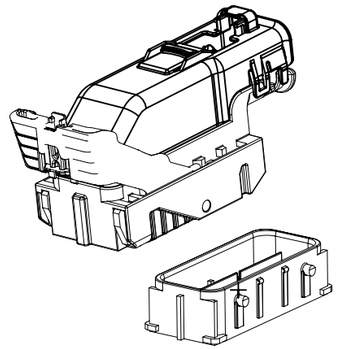

NOTE: REFERENCE THE COMPONENT TABLE
FOR KEY OPTIONS AND CONFIGURATIONS

INTERFACE SIDE SHOWN ON ALL SECTION VIEWS

VIEW V

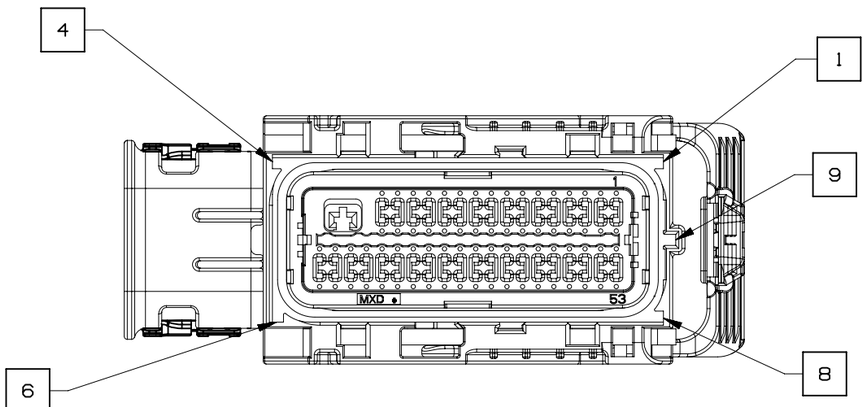


SECTION C-C
KEY OPTION B SHOWN

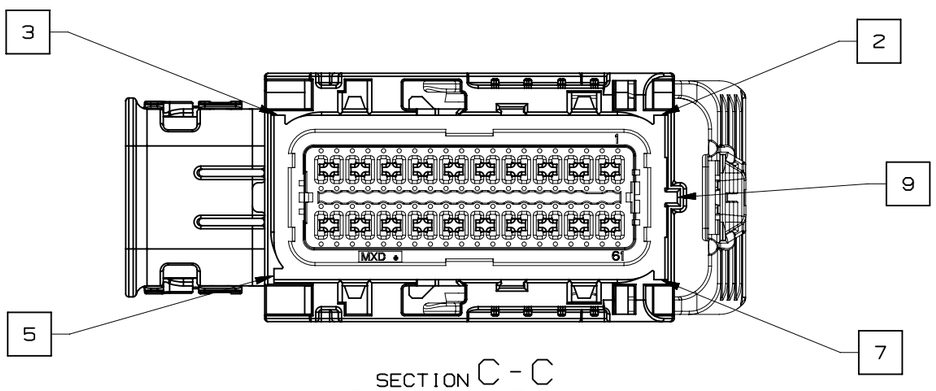


SECTION C - C
KEY OPTION K SHOWN

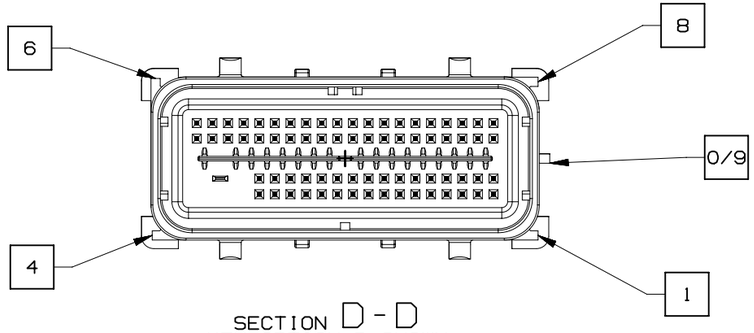


SECTION D - D
KEY OPTION B SHOWN

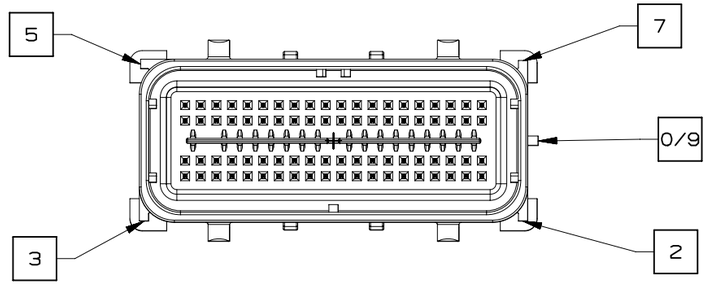


SECTION D - D
KEY OPTION K SHOWN

| | | | | | | |
|---|---|---|---|---|---|---|
| | GM | PAGE TITLE: KEY ID REF - WIRE DRESS OPTION 9 | | DRAWING NUMBER: 12642695 | DWG STATUS: ST R / REV 002 / PDI | PAGE NUMBER: 12 OF 21 |

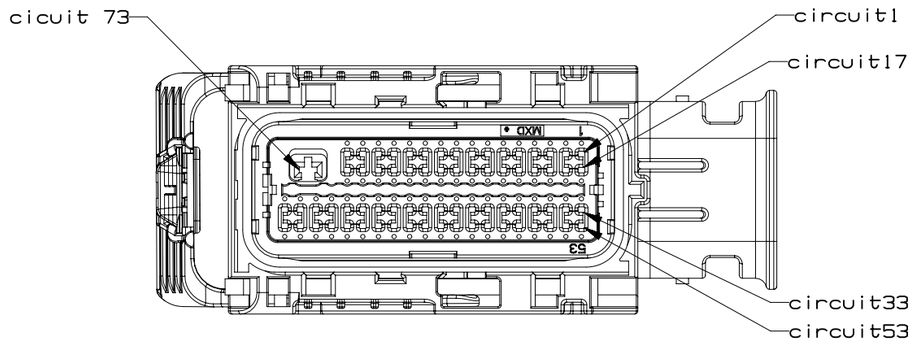


73 CKT HARNESS CONNECTOR ASSEMBLY
WIRE DRESS OPTION 0

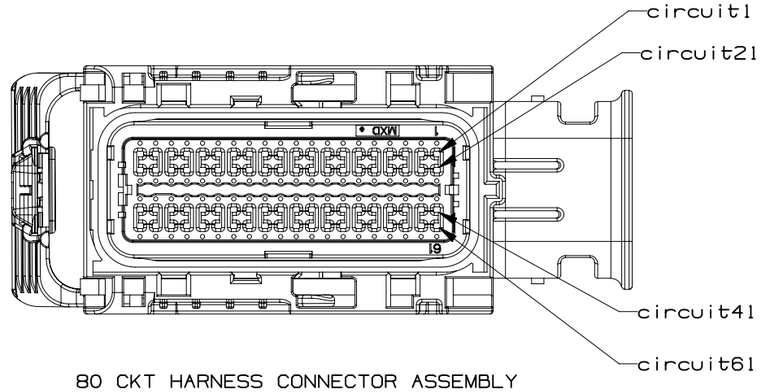


80 CKT HARNESS CONNECTOR ASSEMBLY
WIRE DRESS OPTION 0

INTERFACE SIDE SHOWN ON ALL VIEWS

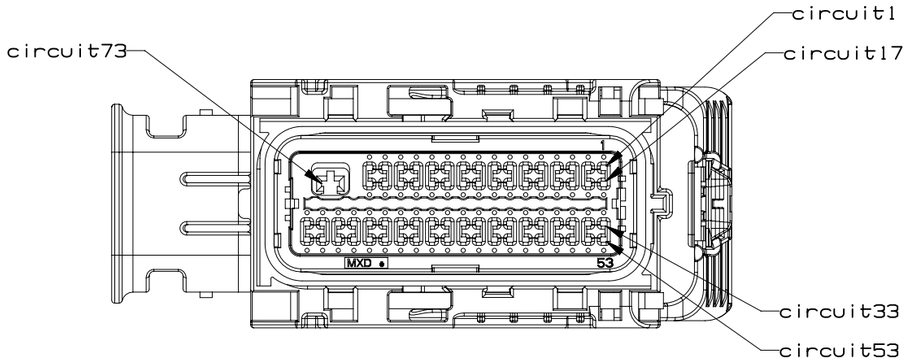


73 CKT HARNESS CONNECTOR ASSEMBLY
WIRE DRESS OPTION 9

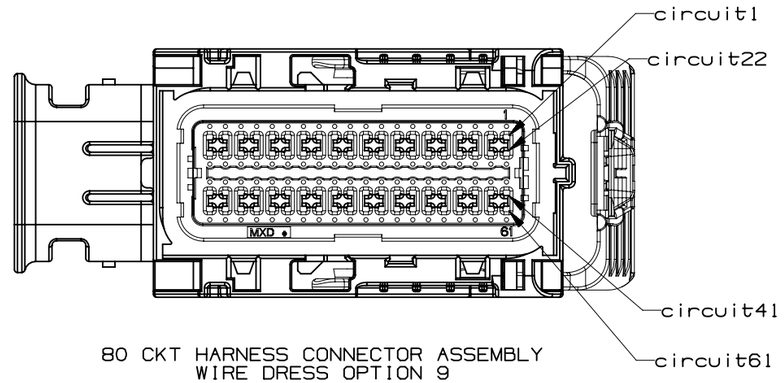


80 CKT HARNESS CONNECTOR ASSEMBLY
WIRE DRESS OPTION 9

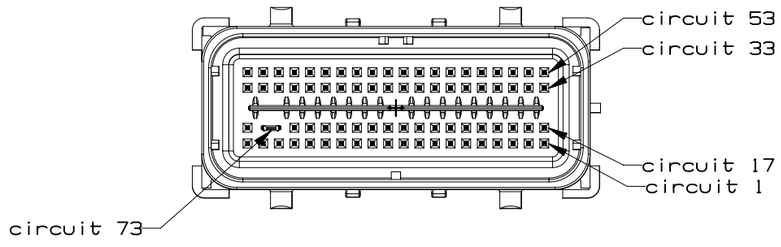


73 CKT COMPONENT CONNECTOR INTERFACE

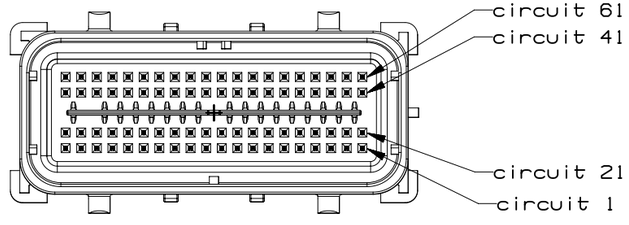


80 CKT COMPONENT CONNECTOR INTERFACE

| | | | | | | | |
|---|---|---|---|---|---|---|---|
| | GM | PAGE TITLE: CIRCUIT CONFIGURATIONS | | DRAWING NUMBER: 12642695 | DWG STATUS | | PAGE NUMBER |
| | | | | | ST: R | REV: 002 | PDI: | 13 OF 21 |

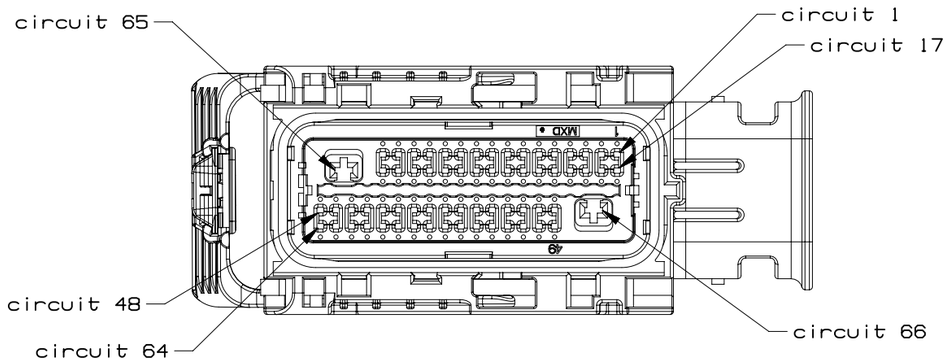


66 CKT HARNESS CONNECTOR ASSEMBLY
WIRE DRESS OPTION 0

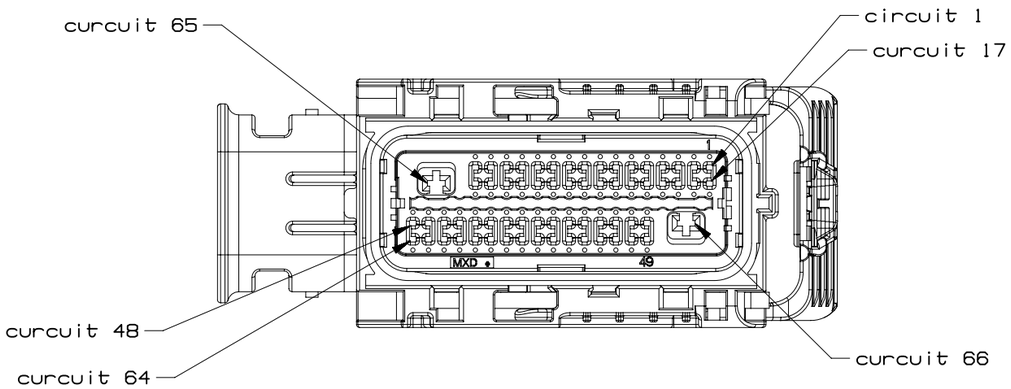


66 CKT HARNESS CONNECTOR ASSEMBLY
WIRE DRESS OPTION 9

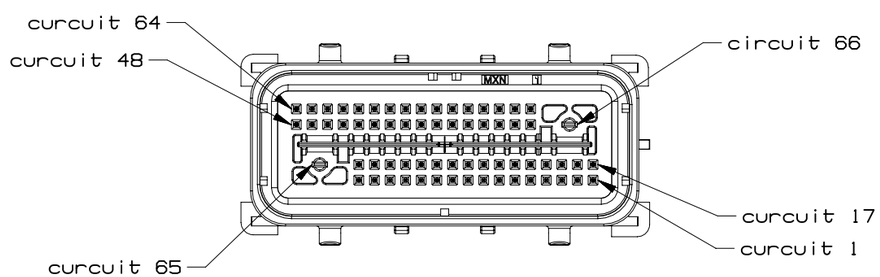


66 CKT COMPONENT CONNECTOR INTERFACE

| | | | | | | | |
|---|---|---|---|---|---|---|---|
| | GM | PAGE TITLE<br>CIRCUIT CONFIGURATIONS | | DRAWING NUMBER<br>12642695 | DWG STATUS<br>ST: R<br>REV: 002<br>PDI: | | PAGE NUMBER<br>14 OF 21 |

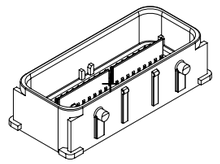

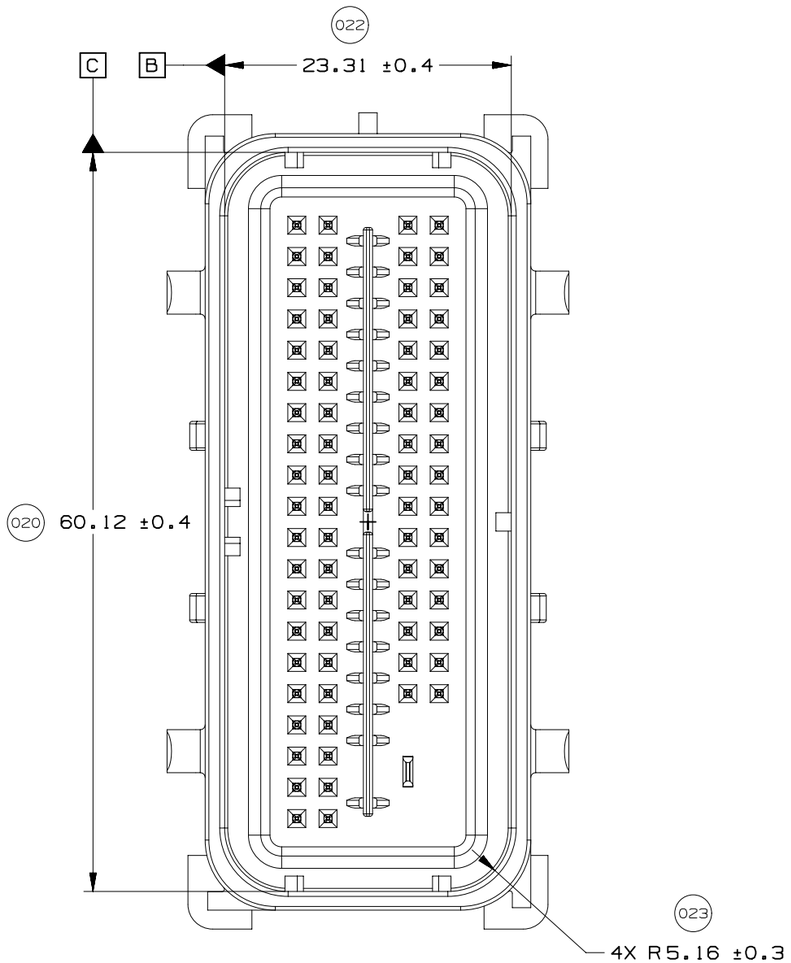


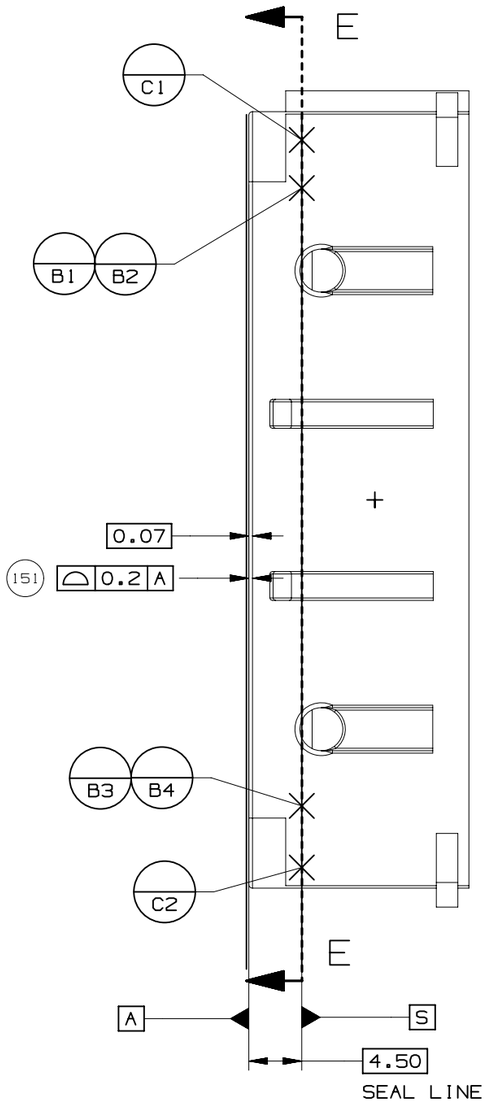


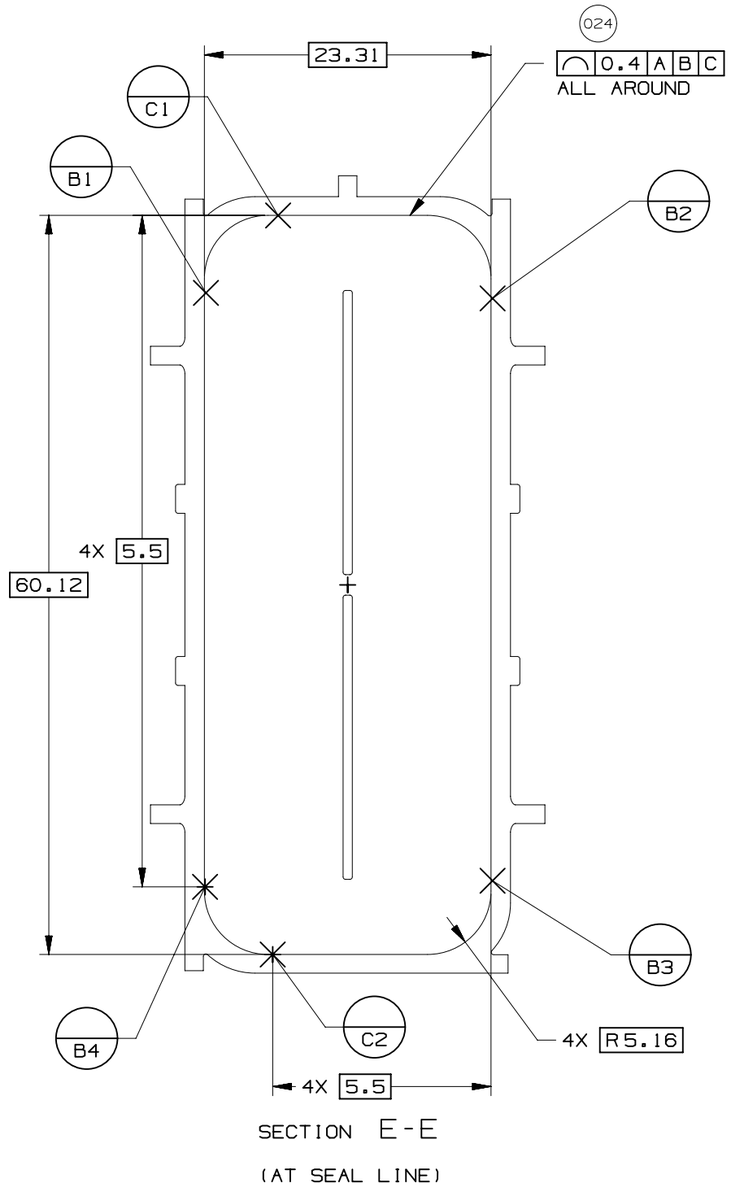


UNLESS SPECIFIED, TOLERANCE OF THE COMPONENT CONNECTOR INTERFACE TO BE 0.13 A B C

| | | | | | | |
|---|---|---|---|---|---|---|
| GM | PAGE TITLE: COMPONENT CONNECTOR INTERFACE | | DRAWING NUMBER: 12642695 | DWG STATUS ST: R | REV: 002 | PDI: | PAGE NUMBER: 15 OF 21 |

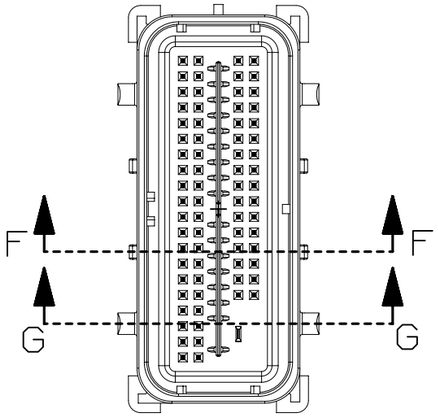


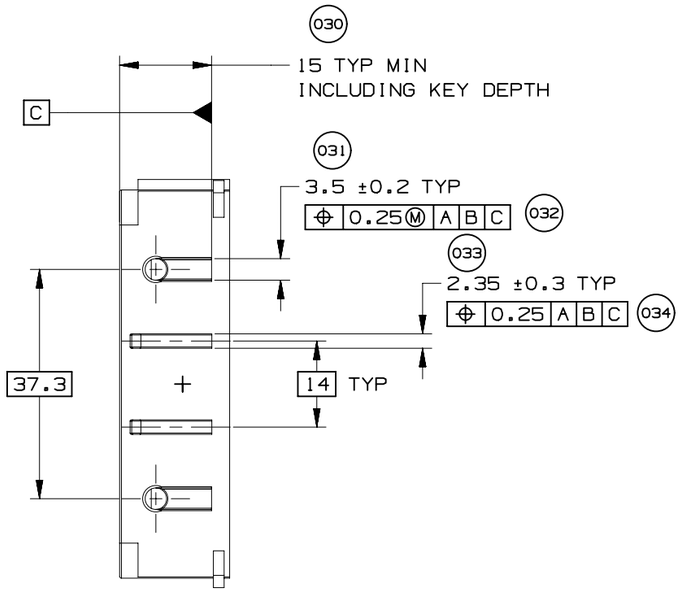


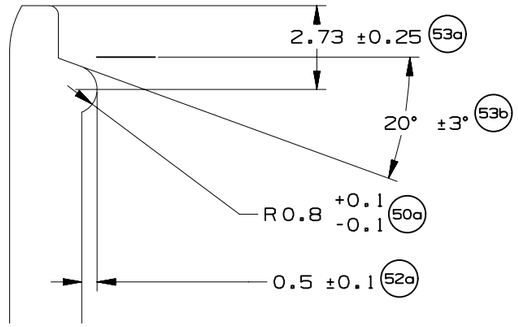


VIEW YY
SCALE 5:1

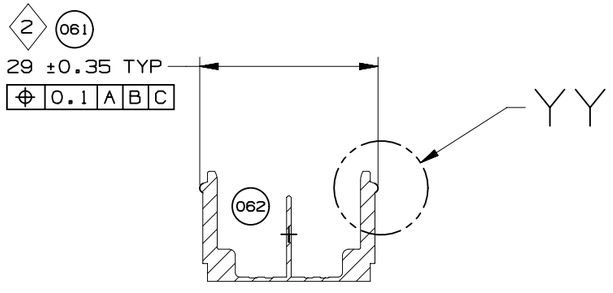


SECTION F-F

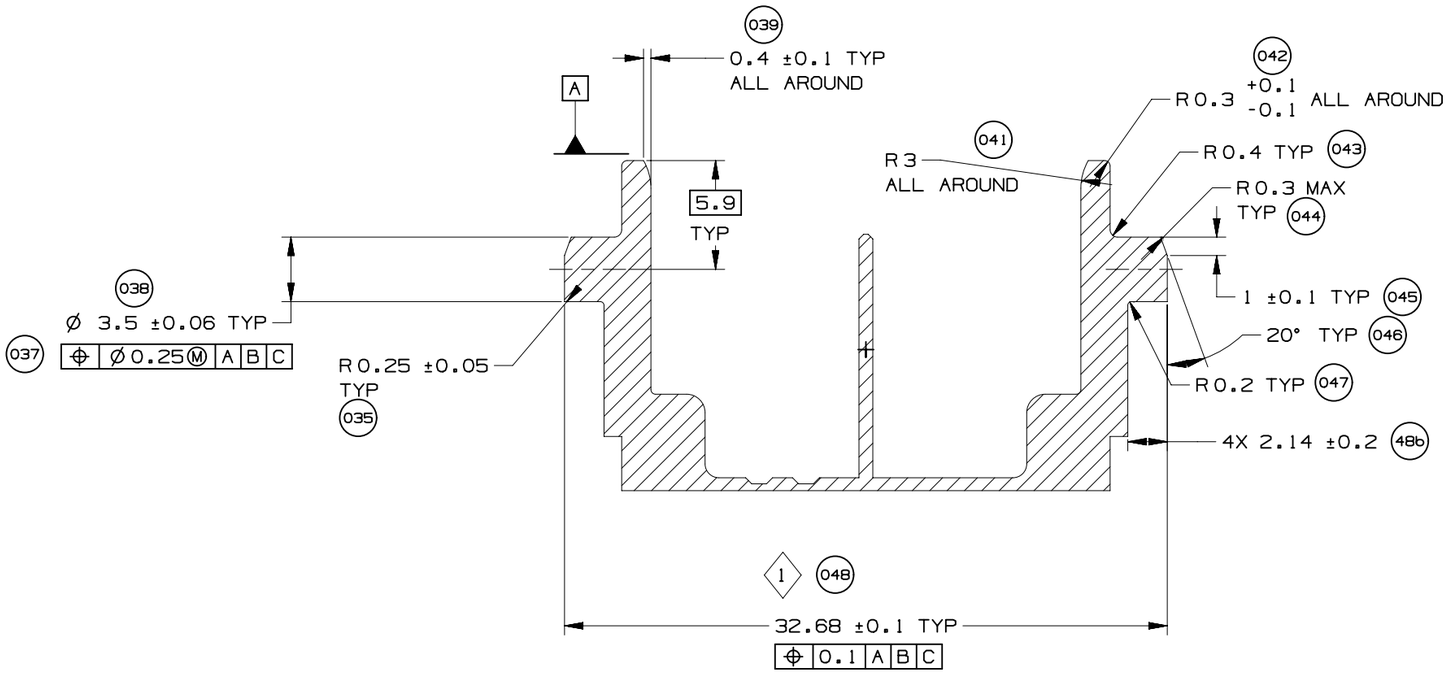


SECTION G-G
(CAM POST)

| | | | | | | | |
|---|---|---|---|---|---|---|---|
| | GM | PAGE TITLE<br>COMPONENT CONNECTOR INTERFACE | | DRAWING NUMBER<br>12642695 | DWG STATUS<br>ST: R / REV: 002 / PDI: | | PAGE NUMBER<br>16 OF 21 |

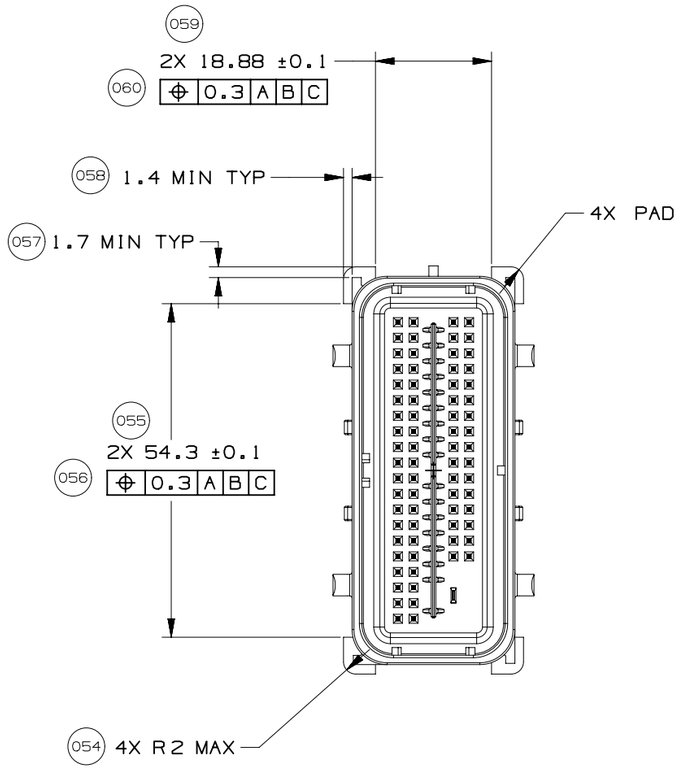


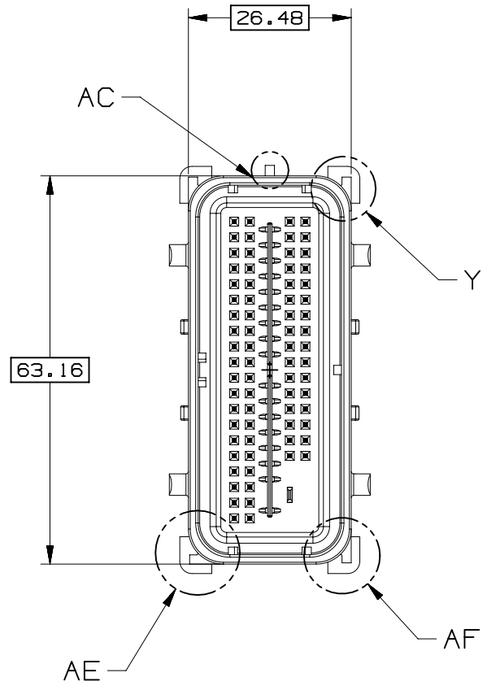


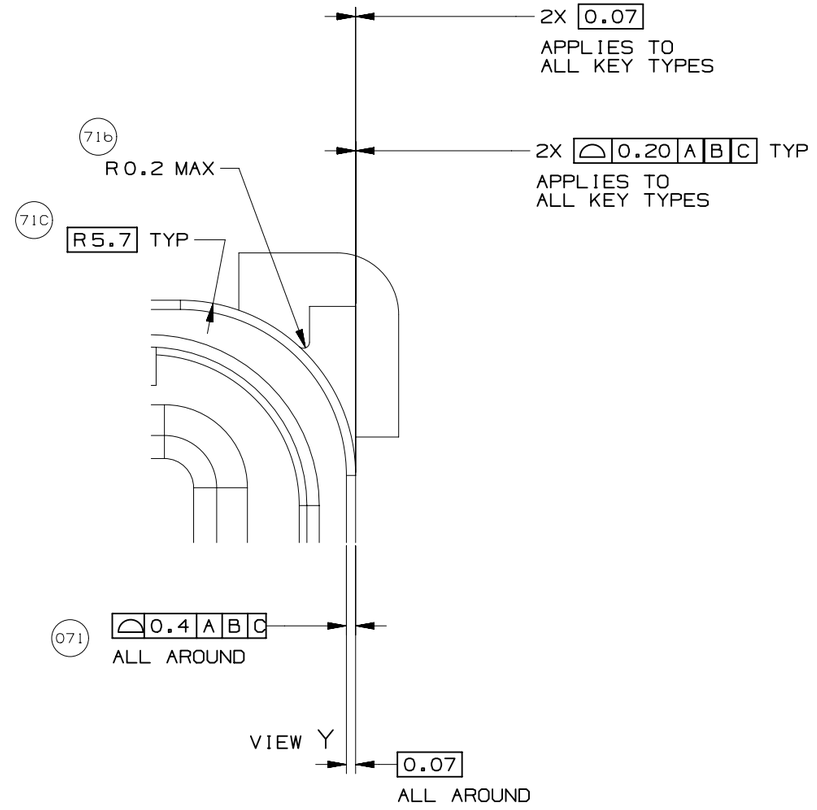


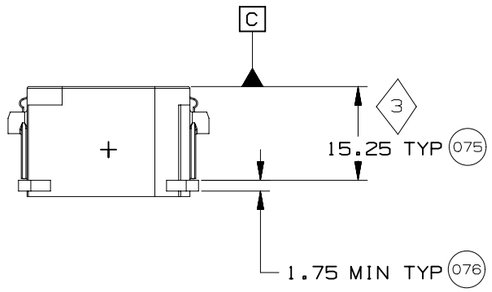


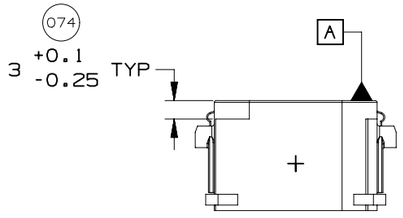


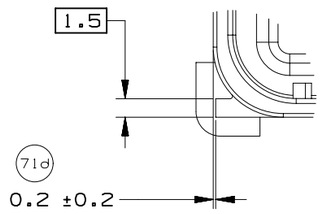


VIEW AE
KEY TYPE 2
SCALE 2:1

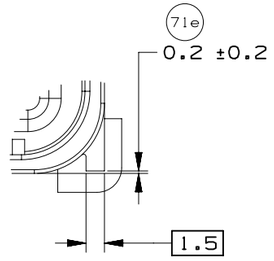


VIEW AF
KEY TYPE 1
SCALE 2:1

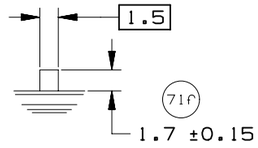


VIEW AC
KEY TYPE 3
SCALE 2:1

| | | | | | | |
|---|---|---|---|---|---|---|
| | GM | PAGE TITLE: COMPONENT CONNECTOR INTERFACE | | DRAWING NUMBER: 12642695 | DWG STATUS: ST R / REV 002 / PDI | PAGE NUMBER: 17 OF 21 |

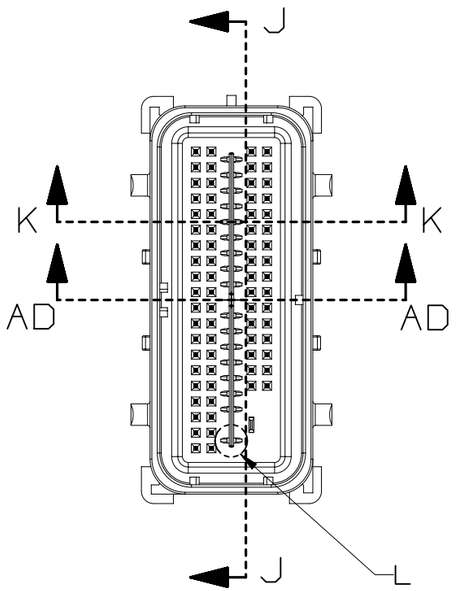


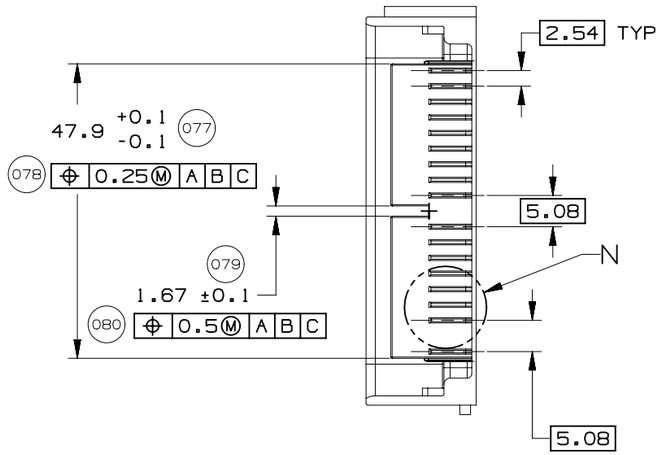


SECTION J-J

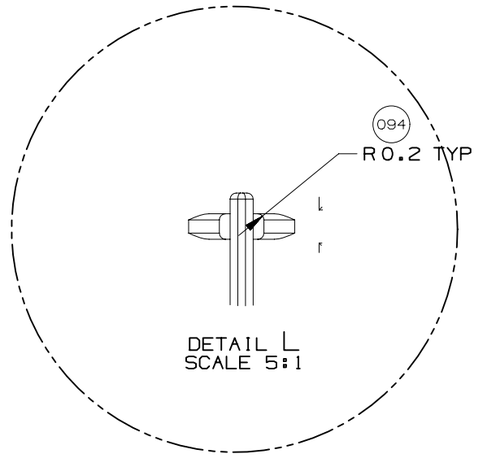


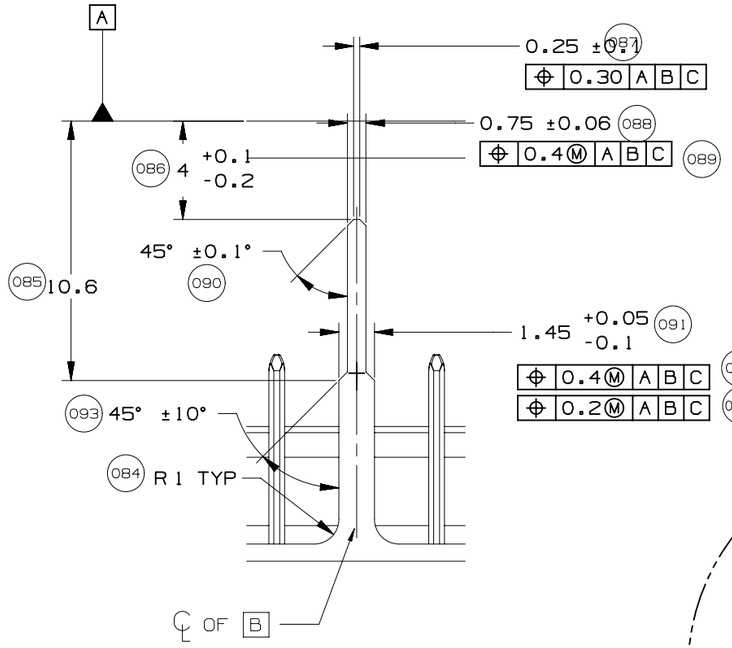


DETAIL M
TYPICAL
SCALE 4:1

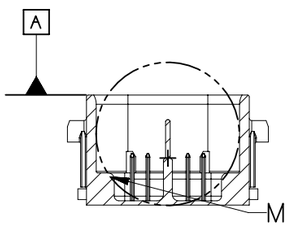


SECTION K-K

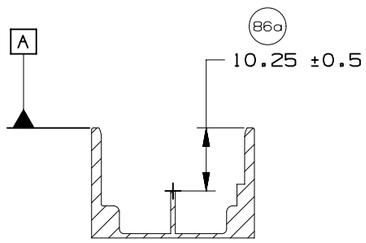


SECTION AD-AD

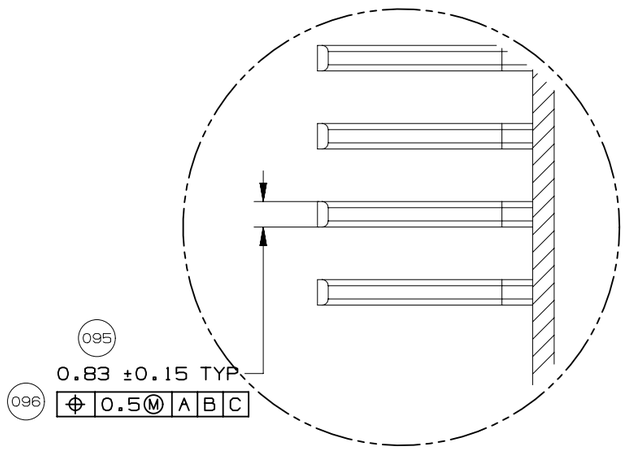


DETAIL N
SCALE 5:1

| | | | | | | |
|---|---|---|---|---|---|---|
| | GM | PAGE TITLE: COMPONENT CONNECTOR INTERFACE | | DRAWING NUMBER: 12642695 | DWG STATUS: ST R / REV 002 / PDI | PAGE NUMBER: 18 OF 21 |

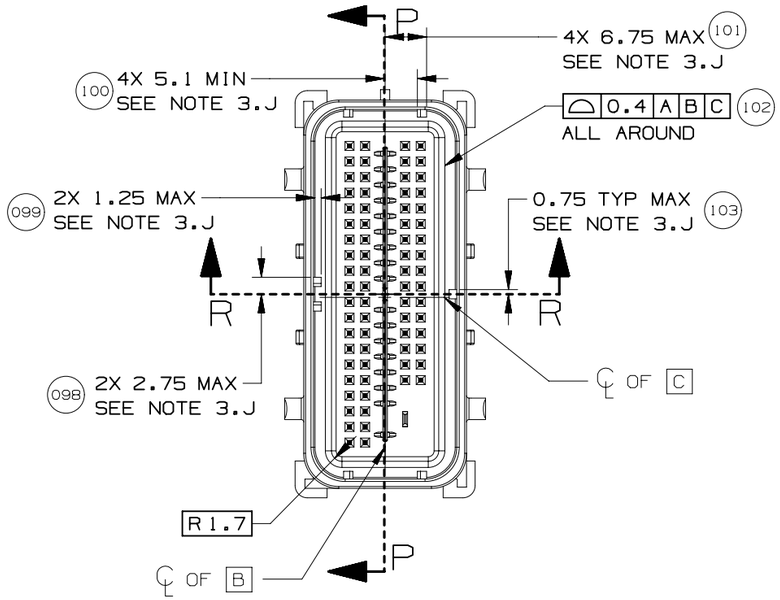


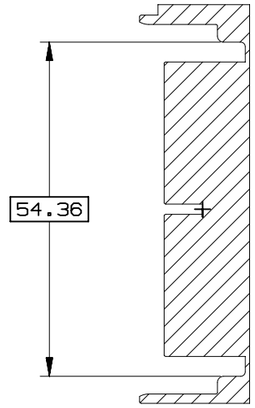


SECTION P-P

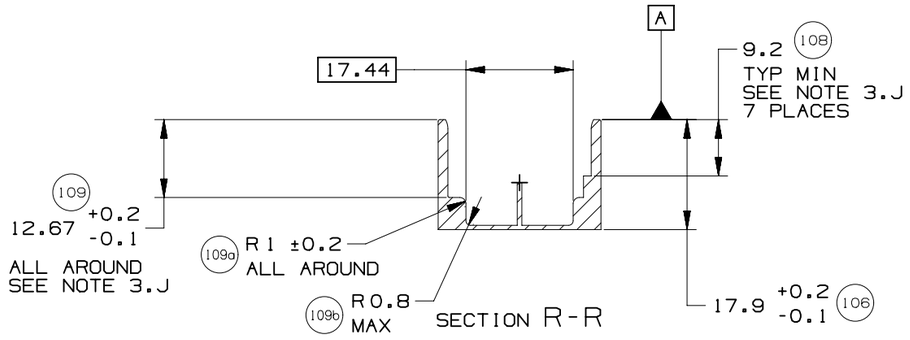


SECTION R-R

| | | | | | | |
|---|---|---|---|---|---|---|
| | GM | PAGE TITLE<br>COMPONENT CONNECTOR INTERFACE | | DRAWING NUMBER<br>12642695 | DWG STATUS<br>ST: R / REV: 002 / PDI: | PAGE NUMBER<br>19 OF 21 |

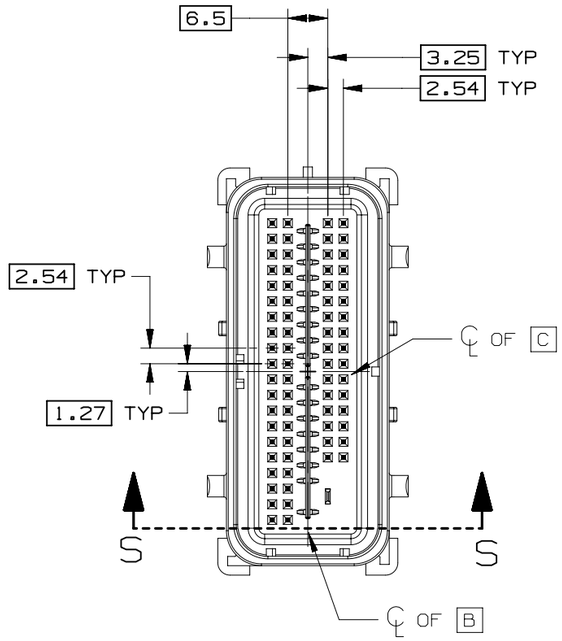


SECTION S-S

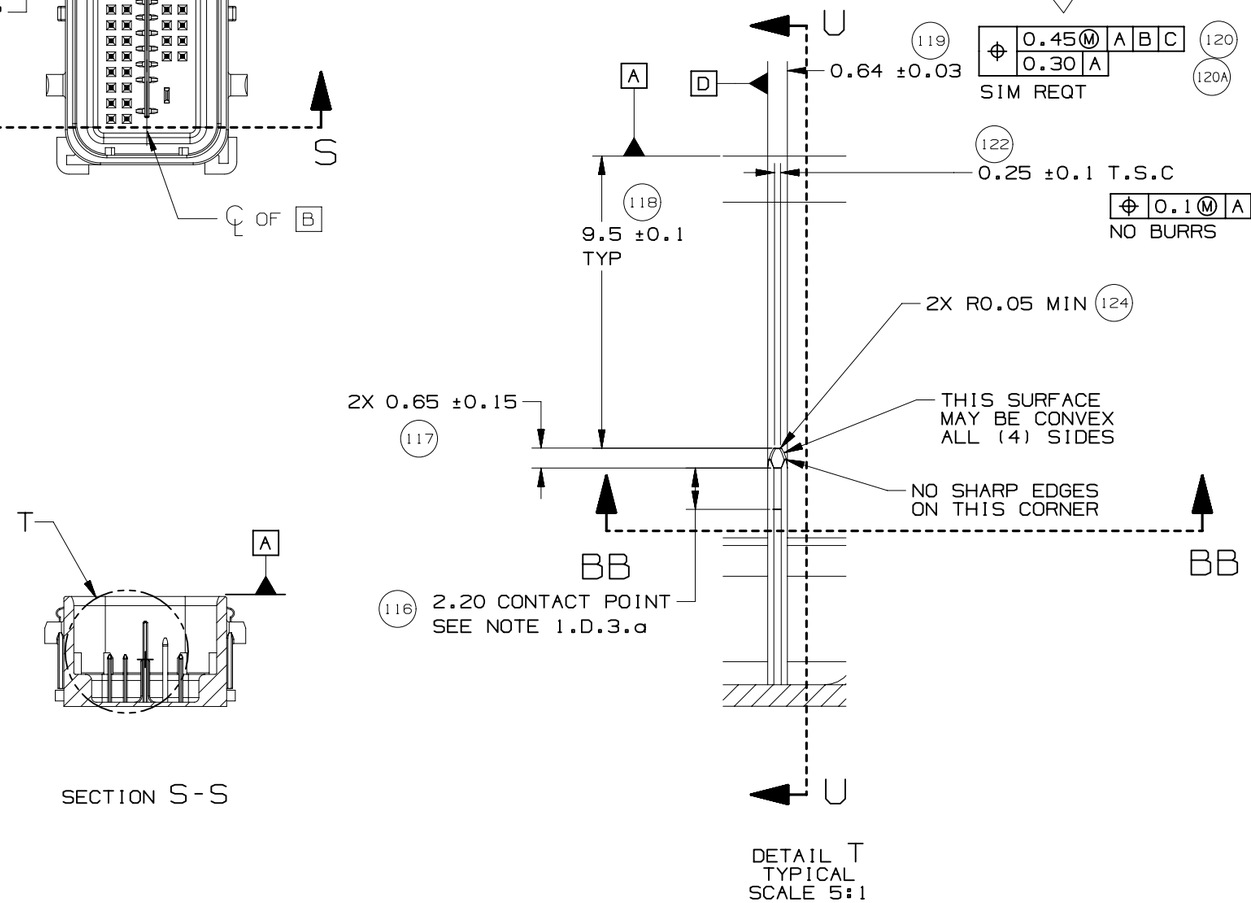


DETAIL T
TYPICAL
SCALE 5:1

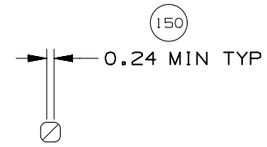


SECTION BB-BB

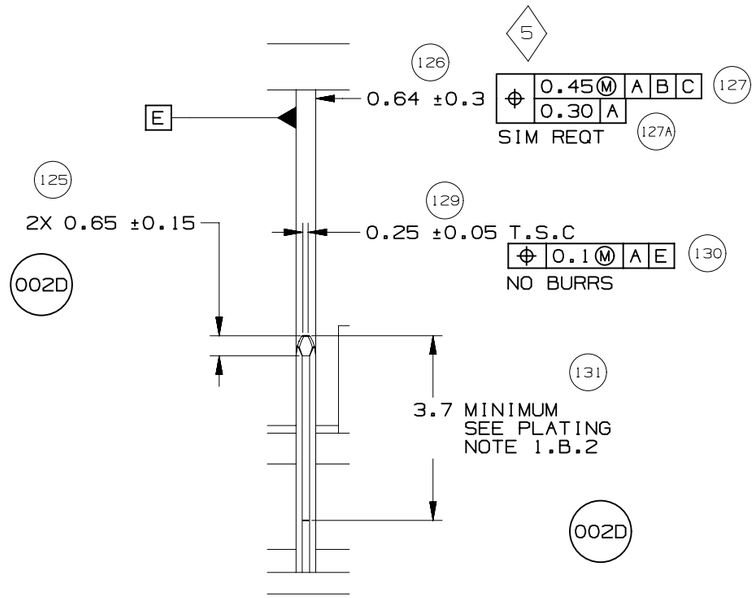


SECTION U-U

| | | | | | | |
|---|---|---|---|---|---|---|
| GM | PAGE TITLE: COMPONENT CONNECTOR INTERFACE | | DRAWING NUMBER: 12642695 | DWG STATUS ST: R | REV: 002 | PDI: | PAGE NUMBER: 20 OF 21 |

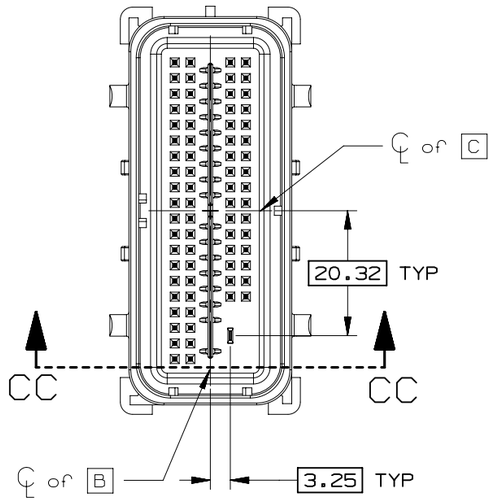


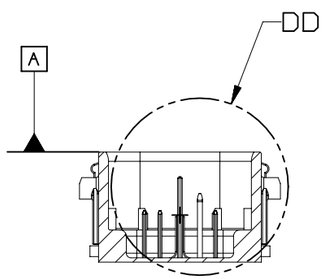


SECTION CC-CC

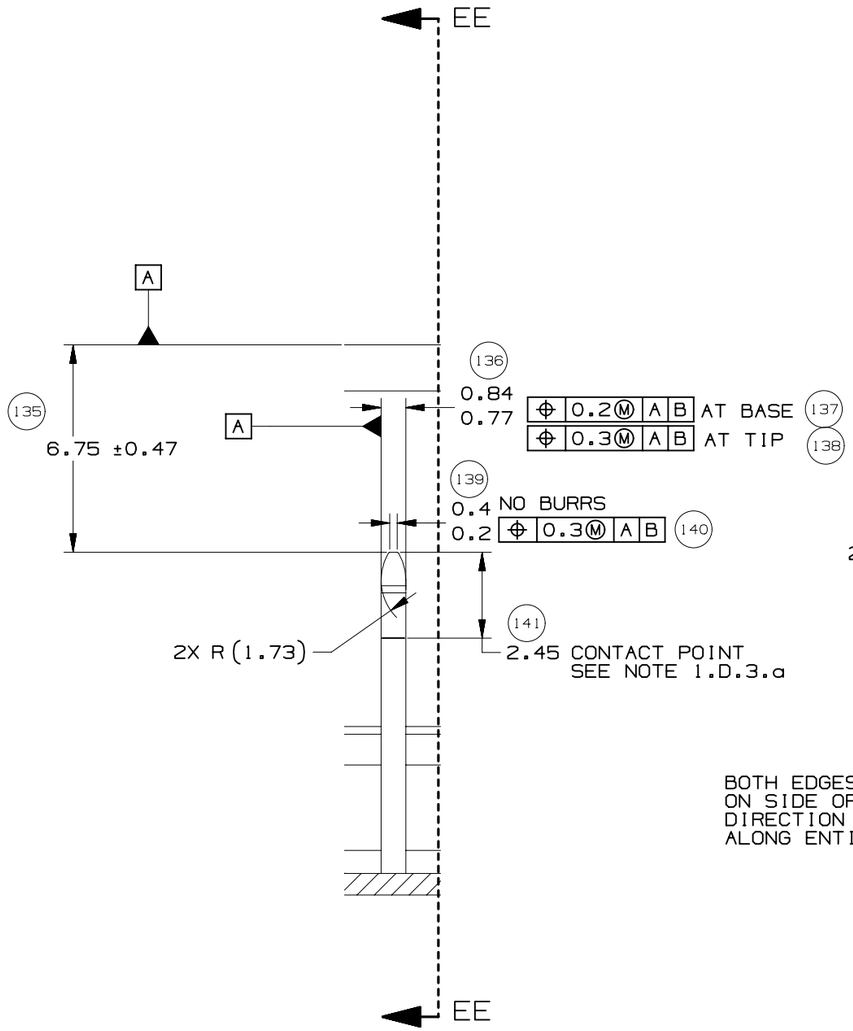


DETAIL DD
TYPICAL
SCALE 5:1

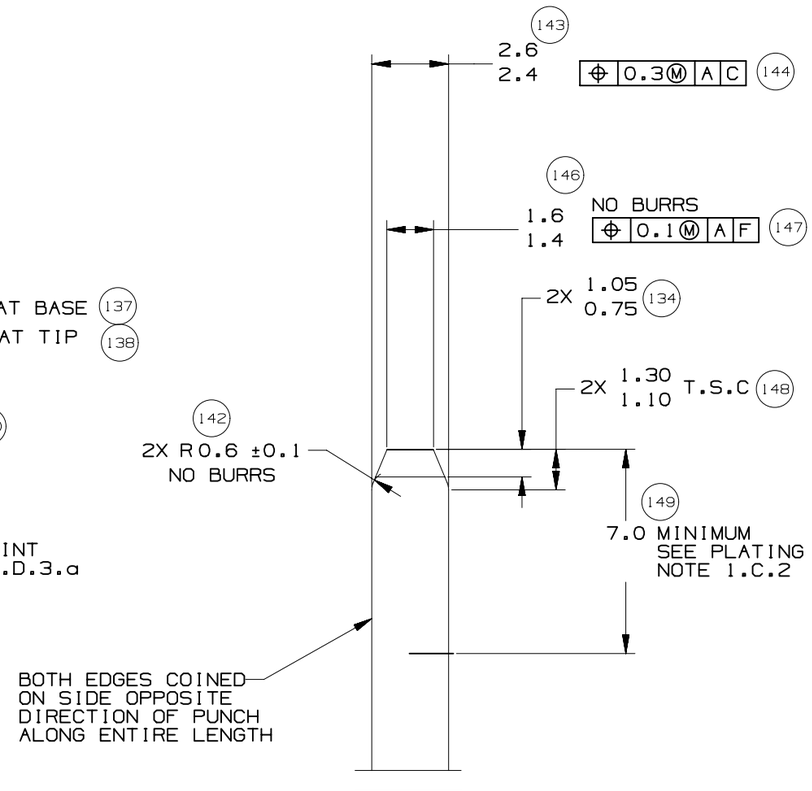


SECTION EE-EE
TYPICAL

| | | | | | | | |
|---|---|---|---|---|---|---|---|
| | GM | PAGE TITLE: COMPONENT CONNECTOR INTERFACE | | DRAWING NUMBER: 12642695 | DWG STATUS ST: R | REV: 002 | PDI: | PAGE NUMBER: 21 OF 21 |

| INDEX | |
|---|---|
| PAGE TITLE | PAGE |
| TITLE BLOCK | 1 |
| REVISION BLOCK | 2 |
| PART BLOCK | 3 |
| KPC BLOCK | 4 |
| COMPONENT TABLE | 5 |
| NOTES | 6 |
| NOTES | 7 |
| WIRE DRESS PACKAGING DIMENSIONS | 8 |
| LOCATION AND PACKAGING DIMENSIONS REFERENCING INTERFACE DATUMS B & C | 9 |
| LOCATION AND PACKAGING DIMENSIONS REFERENCING INTERFACE DATUM A | 10 |
| KEY ID REF - WIRE DRESS OPTION 0 | 11 |
| KEY ID REF - WIRE DRESS OPTION 9 | 12 |
| CIRCUIT CONFIGURATIONS | 13 |
| CIRCUIT CONFIGURATIONS | 14 |
| COMPONENT CONNECTOR INTERFACE | 15 |
| COMPONENT CONNECTOR INTERFACE | 16 |
| COMPONENT CONNECTOR INTERFACE | 17 |
| COMPONENT CONNECTOR INTERFACE | 18 |
| COMPONENT CONNECTOR INTERFACE | 19 |
| COMPONENT CONNECTOR INTERFACE | 20 |
| COMPONENT CONNECTOR INTERFACE | 21 |

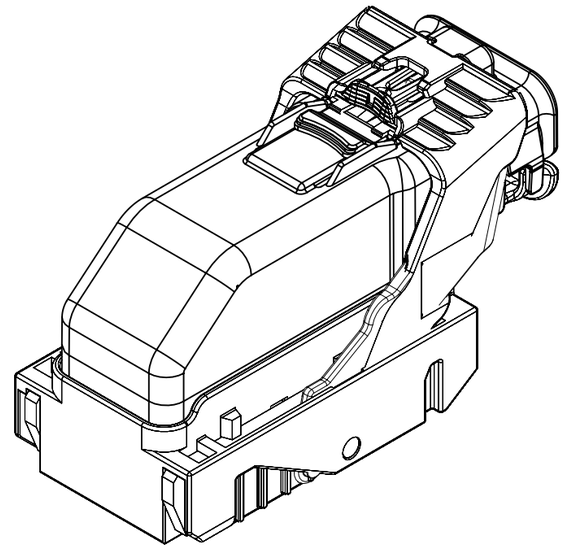

ISO VIEW

GM

**UNLESS OTHERWISE SPECIFIED:** THIS DOCUMENT IS IN ACCORDANCE WITH ASME Y14.5M-1994 AS AMMENDED BY THE GM GLOBAL DIMENSIONING AND TOLERANCING ADDENDUM-1997. ALL GEOMETRIC TOLERANCES AND RELATED DATUMS APPLY RFS. RULE #1 (PERFECT FORM AT MMC) DOES NOT APPLY WHEN A RELATIONSHIP BETWEEN FEATURES IS ESTABLISHED BY ORIENTATION OR LOCATION TOLERANCES. SEPARATE POSITION CALLOUTS MAY BE GAGED SEPARATELY REGARDLESS OF DATUM REFERENCES.

CHANGE RESTRICTED
NO MANUAL CHANGES

DO NOT SCALE

METRIC

DIMENSIONS SHOWN IN MILLIMETERS UNLESS OTHERWISE SPECIFIED

REFERENCE
12H (MOLEX AUTOMOTIVE)

| | | DATE |
|---|---|---|
| DRAFTER | J SZYMKOWSKI | 22DE05 |
| APVD1 | D PFAFFINGER | 22DE05 |
| APVD2 | B BURT | 22DE05 |
| APVD3 | | |
| APVD4 | | |
| APVD5 | | |

DRAWING NAME
HARNESS CONN ASM
66/73/80 CKTS

DRAWING NUMBER
12642695

| DWG STATUS | | |
|---|---|---|
| ST | REV | PDI |
| R | 002 | |

PAGE NUMBER
1 OF 21

| PAGE | DWG STATUS | | | | | REVISION HISTORY | AUTH | DR | CK | ENG |
|---|---|---|---|---|---|---|---|---|---|---|
| | DATE | ST | REV | CHG | PDI | | | | | |
| | 19DE11 | R | 001 | | | RELEASED TO PRODUCTION AT DLS A | CRMRJB | SC | MRO | GF |
| 3 | 08MY15 | R | 002 | A | | REORDERED PART BLOCK AND ADDED MASS<br>CORRECTED P/N TYPO FROM 12562676<br>TO 12582676 | | | | |
| 3, 5 | | R | 002 | B | | ADDED 12659312, 12659313, 12653574 AND 12653575 | | | | |
| 6 | | R | 002 | C | | REMOVED NOTE 1 . D . 3 . C | | | | |
| 20 | | R | 002 | D | | DIM 125 WAS 3.25<br>DIM 131 WAS 5.5 | CRMRJD | DFK | MRO | GF |

| PAGE | DWG STATUS | | | | | REVISION HISTORY | AUTH | DR | CK | ENG |
|---|---|---|---|---|---|---|---|---|---|---|
| | DATE | ST | REV | CHG | PDI | | | | | |

| | | PAGE TITLE | | DRAWING NUMBER | DWG STATUS | | | PAGE NUMBER |
|---|---|---|---|---|---|---|---|---|
| | GM | REVISION BLOCK | | 12642695 | ST | REV | PDI | 2 OF 21 |
| | | | | | R | 002 | | |

002A 002B

| | | | | | | | | | | |
|---|---|---|---|---|---|---|---|---|---|---|
| 30 | RD | 12582676 | | C | 003 | | 0.011 | WIRE HARNESS COVER | 66/73/80 WAY |
| 29 | RD | AMJ29214 | | C | 003 | | 0.050 | HARN CONN ASM 80 CKT | KEY M OPTION 9 |
| 28 | RD | AMJ29136 | | C | 003 | | 0.050 | HARN CONN ASM 80 CKT | KEY L OPTION 9 |
| 27 | RD | AMJ29117 | | C | 003 | | 0.050 | HARN CONN ASM 80 CKT | KEY K OPTION 9 |
| 26 | RD | 12615657 | | C | 003 | | 0.050 | HARN CONN ASM 80 CKT | KEY J OPTION 9 |
| 25 | RD | 12603599 | | C | 003 | | 0.050 | HARN CONN ASM 80 CKT | KEY H OPTION 9 |
| 24 | RD | 12603598 | | C | 003 | | 0.050 | HARN CONN ASM 80 CKT | KEY G OPTION 9 |
| 23 | RD | AMJ28669 | | C | 003 | | 0.050 | HARN CONN ASM 80 CKT | KEY M OPTION 0 |
| 22 | RD | AMJ29057 | | C | 003 | | 0.050 | HARN CONN ASM 80 CKT | KEY L OPTION 0 |
| 21 | RD | AMJ28595 | | C | 003 | | 0.050 | HARN CONN ASM 80 CKT | KEY K OPTION 0 |
| 20 | RD | 12615656 | | C | 003 | | 0.050 | HARN CONN ASM 80 CKT | KEY J OPTION 0 |
| 19 | RD | 12588058 | | C | 004 | | 0.050 | HARN CONN ASM 80 CKT | KEY H OPTION 0 |
| 18 | RD | 12588057 | | C | 003 | | 0.050 | HARN CONN ASM 80 CKT | KEY G OPTION 0 |
| 17 | RD | 12653575 | | C | 002 | | 0.050 | HARN CONN ASM 73 CKT | KEY F OPTION 9 |
| 16 | RD | AMJ28698 | | C | 003 | | 0.050 | HARN CONN ASM 73 CKT | KEY E OPTION 9 |
| 15 | RD | 12647269 | | C | 002 | | 0.050 | HARN CONN ASM 73 CKT | KEY D OPTION 9 |
| 14 | RD | 12615655 | | C | 003 | | 0.050 | HARN CONN ASM 73 CKT | KEY C OPTION 9 |
| 13 | RD | 12603597 | | C | 005 | | 0.050 | HARN CONN ASM 73 CKT | KEY B OPTION 9 |
| 12 | RD | 12603596 | | C | 006 | | 0.050 | HARN CONN ASM 73 CKT | KEY A OPTION 9 |
| 11 | RD | 12653574 | | C | 002 | | 0.050 | HARN CONN ASM 73 CKT | KEY F OPTION 0 |
| 10 | RD | AMJ28633 | | C | 003 | | 0.050 | HARN CONN ASM 73 CKT | KEY E OPTION 0 |
| 09 | RD | 12647268 | | C | 002 | | 0.050 | HARN CONN ASM 73 CKT | KEY D OPTION 0 |
| 08 | RD | 12615654 | | C | 005 | | 0.050 | HARN CONN ASM 73 CKT | KEY C OPTION 0 |
| 07 | RD | 12582678 | | C | 008 | | 0.050 | HARN CONN ASM 73 CKT | KEY B OPTION 0 |
| 06 | RD | 12582677 | | C | 010 | | 0.050 | HARN CONN ASM 73 CKT | KEY A OPTION 0 |
| 05 | RD | 12659313 | | 2 | 001 | | 0.050 | HARN CONN ASM 66 CKT | KEY C OPTION 9 |
| 04 | RD | 12642693 | | C | 002 | | 0.050 | HARN CONN ASM 66 CKT | KEY A OPTION 9 |
| 03 | RD | 12659312 | | 2 | 001 | | 0.050 | HARN CONN ASM 66 CKT | KEY C OPTION 0 |
| 02 | RD | 12642692 | | C | 003 | | 0.050 | HARN CONN ASM 66 CKT | KEY A OPTION 0 |
| 01 | RD | 12642695 | | A | | 002 | 3.408 | HARNESS CONN ASM | |
| | | | | | | | | DRAWING | |

| HIERARCHY /QUANTITY | DWG ITM | DWG RLTN SHIP | PART NUMBER | P-A ITM | D L S | ST | REV | P D I | N M C I | MASS (KG) | PART NAME | NOTES |
|---|---|---|---|---|---|---|---|---|---|---|---|---|

PARTS SHOWN ON DRAWING

| | PAGE TITLE | | DRAWING NUMBER | DWG STATUS | | | PAGE NUMBER |
|---|---|---|---|---|---|---|---|
| GM | PART BLOCK | | 12642695 | ST | REV | PDI | 3 OF 21 |
| | | | | R | 002 | | |

# KEY PRODUCT CHARACTERISTICS
# (IN ACCORDANCE WITH QN 1805 OR QN 1050)

▽ SAFETY/COMPLIANCE

◇ FIT/FUNCTION

| TOTAL ON DRAWING | 5 |
|---|---|
| LAST NO. USED | 5 |

| NO | TYPE | DESCRIPTION | RATIONALE | PAGE/ZONE |
|---|---|---|---|---|
| 1 | F/F | 32.68 | IMPROVE CONNECTOR SYSTEM MATING | 15 |
| 2 | F/F | 29.00 | INSURE PROPER RELEASE OF LEVER | 15 |
| 3 | F/F | 15.25 | INSURE FINAL MATE POSITION | 16 |
| 5 | F/F | POSITIONAL TOLERANCE (2 PLACES) | INSURE CONNECTOR SYSTEM MATEABILITY | 19 |

| | | | | | APPLICABLE COMPONENTS | | | | | |
|---|---|---|---|---|---|---|---|---|---|---|
| LINE | MFG. | MFG. P/N | GM P/N | EFFECTIVE DATE | DESCRIPTION | KEY OPTION | WIRE DRESS OPTION | KEY CONFIG. | COLOR | STATUS |
| - | | | | | | | | | | |
| 1 | MOLEX | 34565-0003 | 12582676 | 02JN03 | MX123 DRESS COVER 66/73/80 CKT | N/A | N/A | N/A | BLACK | AVAILABLE |
| 2 | MOLEX | 34822-0013 | 12642692 | 01SP13 | MX123 HRNS CONN ASSY 66 CKT | A | 0 | 1458 | BLACK | AVAILABLE |
| 3 | MOLEX | 34822-0033 | 12659312 | 01SP13 | MX123 HRNS CONN ASSY 66 CKT | C | 0 | 2467 | BLUE | AVAILABLE |
| 4 | MOLEX | 34822-0023 | 12642693 | 01SP13 | MX123 HRNS CONN ASSY 66 CKT | A | 9 | 1458 | BLACK | AVAILABLE |
| 5 | MOLEX | 34822-0043 | 12659313 | 01SP13 | MX123 HRNS CONN ASSY 66 CKT | C | 9 | 2467 | BLUE | AVAILABLE |
| 6 | MOLEX | 34566-0103 | 12582677 | 11JN04 | MX123 HRNS CONN ASSY 73 CKT | A | 0 | 1458 | BLACK | AVAILABLE |
| 7 | MOLEX | 34566-0203 | 12582678 | 11JN04 | MX123 HRNS CONN ASSY 73 CKT | B | 0 | 1468 | ST GRAY | AVAILABLE |
| 8 | MOLEX | 34566-0303 | 12615654 | 09AP08 | MX123 HRNS CONN ASSY 73 CKT | C | 0 | 2467 | BLUE | AVAILABLE |
| 9 | MOLEX | 34566-0403 | 12647268 | T.B.D | MX123 HRNS CONN ASSY 73 CKT | D | 0 | 2367 | BROWN | NOT ACTIVE |
| 10 | MOLEX | 34566-0503 | AMJ28633 | T.B.D | MX123 HRNS CONN ASSY 73 CKT | E | 0 | 2468 | GREEN | NOT ACTIVE |
| 11 | MOLEX | 34566-0603 | 12653574 | 05DC14 | MX123 HRNS CONN ASSY 73 CKT | F | 0 | 1357 | NATURAL | AVAILABLE |
| 12 | MOLEX | 34566-0703 | 12588057 | 09AP08 | MX123 HRNS CONN ASSY 80 CKT | G | 0 | 1358 | BLUE | AVAILABLE |
| 13 | MOLEX | 34566-0803 | 12588058 | 11JN04 | MX123 HRNS CONN ASSY 80 CKT | H | 0 | 2458 | ST GRAY | AVAILABLE |
| 14 | MOLEX | 34566-0903 | 12615656 | T.B.D | MX123 HRNS CONN ASSY 80 CKT | J | 0 | 2457 | BLACK | NOT ACTIVE |
| 15 | MOLEX | 34566-1003 | AMJ28595 | T.B.D | MX123 HRNS CONN ASSY 80 CKT | K | 0 | 2357 | BROWN | NOT ACTIVE |
| 16 | MOLEX | 34566-1103 | AMJ29057 | T.B.D | MX123 HRNS CONN ASSY 80 CKT | L | 0 | 2368 | GREEN | NOT ACTIVE |
| 17 | MOLEX | 34566-1203 | AMJ28669 | T.B.D | MX123 HRNS CONN ASSY 80 CKT | M | 0 | 2358 | NATURAL | NOT ACTIVE |
| 18 | MOLEX | 34566-1303 | 12603596 | 11JN04 | MX123 HRNS CONN ASSY 73 CKT | A | 9 | 1458 | BLACK | AVAILABLE |
| 19 | MOLEX | 34566-1403 | 12603597 | 11JN04 | MX123 HRNS CONN ASSY 73 CKT | B | 9 | 1468 | ST GRAY | AVAILABLE |
| 20 | MOLEX | 34566-1503 | 12615655 | 09AP08 | MX123 HRNS CONN ASSY 73 CKT | C | 9 | 2467 | BLUE | AVAILABLE |
| 21 | MOLEX | 34566-1603 | 12647269 | T.B.D | MX123 HRNS CONN ASSY 73 CKT | D | 9 | 2367 | BROWN | NOT ACTIVE |
| 22 | MOLEX | 34566-1703 | AMJ28698 | T.B.D | MX123 HRNS CONN ASSY 73 CKT | E | 9 | 2468 | GREEN | NOT ACTIVE |
| 23 | MOLEX | 34566-1803 | 12653575 | 05DC14 | MX123 HRNS CONN ASSY 73 CKT | F | 9 | 1357 | NATURAL | AVAILABLE |
| 24 | MOLEX | 34566-1903 | 12603598 | 09AP08 | MX123 HRNS CONN ASSY 80 CKT | G | 9 | 1358 | BLUE | AVAILABLE |
| 25 | MOLEX | 34566-2003 | 12603599 | 11JN04 | MX123 HRNS CONN ASSY 80 CKT | H | 9 | 2458 | ST GRAY | AVAILABLE |
| 26 | MOLEX | 34566-2103 | 12615657 | T.B.D | MX123 HRNS CONN ASSY 80 CKT | J | 9 | 2457 | BLACK | NOT ACTIVE |
| 27 | MOLEX | 34566-2203 | AMJ29117 | T.B.D | MX123 HRNS CONN ASSY 80 CKT | K | 9 | 2357 | BROWN | NOT ACTIVE |
| 28 | MOLEX | 34566-2303 | AMJ29136 | T.B.D | MX123 HRNS CONN ASSY 80 CKT | L | 9 | 2368 | GREEN | NOT ACTIVE |
| 29 | MOLEX | 34566-2403 | AMJ29214 | T.B.D | MX123 HRNS CONN ASSY 80 CKT | M | 9 | 2358 | NATURAL | NOT ACTIVE |
| 30 | MOLEX | 34736-2002 | 12642697 | 01AU10 | MX64 RCPT TERM Ag 18/20 GAGE B (RIGHT PAYOFF) | N/A | N/A | N/A | N/A | AVAILABLE |
| 31 | MOLEX | 34736-2001 | 12642696 | 01AU10 | MX64 RCPT TERM Ag 22 GAGE B (RIGHT PAYOFF) | N/A | N/A | N/A | N/A | AVAILABLE |
| 32 | MOLEX | 34586-0001 | T.B.D. | 11JN04 | MX123 0.64MM GROMMET PLUG | N/A | N/A | N/A | NATURAL | AVAILABLE |
| 33 | YAZAKI | 7116-4150-02 | 12588066 | 02JN03 | 2.8mm YESC SEALED FEMALE TERMINAL TIN 20/22 GAGE (CABLE RANGE 0.30mm-0.60mm) | N/A | N/A | N/A | N/A | NOT ACTIVE |
| 34 | YAZAKI | 7116-4151-02 | 12588067 | 02JN03 | 2.8mm YESC SEALED FEMALE TERMINAL TIN 16/18 GAGE (CABLE RANGE 0.75mm-1.40mm) | N/A | N/A | N/A | N/A | NOT ACTIVE |
| 35 | YAZAKI | 7116-4152-02 | 12582685 | 02JN03 | 2.8mm YESC SEALED FEMALE TERMINAL TIN 14 GAGE (CABLE RANGE 1.50mm-2.50mm) | N/A | N/A | N/A | N/A | AVAILABLE |
| 36 | YAZAKI | 7158-3111-60 | 12588068 | 02JN03 | 2.8mm CABLE SEAL (wire O.D. range 1.20mm-1.90mm) | N/A | N/A | N/A | GREEN | NOT ACTIVE |
| 37 | YAZAKI | 7158-3112-70 | 12588069 | 02JN03 | 2.8mm CABLE SEAL (wire O.D. range 1.80mm-2.30mm) | N/A | N/A | N/A | YELLOW | NOT ACTIVE |
| 38 | YAZAKI | 7158-3113-40 | 12582686 | 02JN03 | 2.8mm CABLE SEAL (wire O.D. range 2.18mm-3.00mm) | N/A | N/A | N/A | WHITE | AVAILABLE |
| 39 | YAZAKI | 7158-3114-90 | T.B.D | 02JN03 | 2.8mm YESC CAVITY PLUG | N/A | N/A | N/A | BLUE | AVAILABLE |
| 40 | MOLEX | 63811-4200 | XX019825 | 02JN03 | MX64 TERM HAND CRIMP TOOL | N/A | N/A | N/A | N/A | AVAILABLE |
| 41 | MOLEX | 63813-1400 | XX019826 | 02JN03 | MX64 TERM SERVICE TOOL | N/A | N/A | N/A | N/A | AVAILABLE |
| 42 | MOLEX | 63865-8000 | XX019827 | 02JN03 | MX64 CRIMP APPLICATOR with TOOL KIT 18/20 GAGE PAYOFF DIRECTION D (left payoff) (contact Molex for payoff detail) | N/A | N/A | N/A | N/A | AVAILABLE |
| 43 | MOLEX | 63865-8070 | XX019828 | 02JN03 | MX64 APPLICATOR TOOL KIT 18/20 GAGE | N/A | N/A | N/A | N/A | AVAILABLE |
| 44 | MOLEX | 63865-8100 | XX019829 | 02JN03 | MX64 CRIMP APPLICATOR with TOOL KIT 22 GAGE PAYOFF DIRECTION D (left payoff) (contact Molex for payoff detail) | N/A | N/A | N/A | N/A | AVAILABLE |
| 45 | MOLEX | 63865-8170 | XX019830 | 02JN03 | MX64 APPLICATOR TOOL KIT 22 GAGE | N/A | N/A | N/A | N/A | AVAILABLE |
| 46 | SPX | J35616-64 | T.B.D. | 02JN03 | 0.64mm PROBE TOOL (for rcpt) | N/A | N/A | N/A | N/A | AVAILABLE |
| 47 | SPX | J35616-64A | T.B.D. | 02JN03 | 0.64mm PROBE TOOL WITH EXT (for rcpt) | N/A | N/A | N/A | N/A | AVAILABLE |
| 48 | SPX | J35616-65 | T.B.D. | 02JN03 | 0.64mm PROBE TOOL WITH EXT (for pin) | N/A | N/A | N/A | N/A | AVAILABLE |
| 49 | SPX | J35616-4A | T.B.D. | 02JN03 | 2.8mm PROBE TOOL (for rcpt) | N/A | N/A | N/A | N/A | AVAILABLE |
| 50 | YAZAKI | X39899-J374 | 12094430 | 02JN03 | 2.8mm TERM SERVICE TOOL | N/A | N/A | N/A | N/A | AVAILABLE |

002B

* - MX123 DRESS COVER 73/80/66 CKT MATES TO ANY MX123 HARN CONN ASSY SHOWN ON TABLE ABOVE

# NOTES: UNLESS OTHERWISE SPECIFIED

1. MATERIAL FOR INTERFACE:

A. RESIN:
   1. 30% G.F. PBT; 20% MAX. (BY WEIGHT) REGRIND.
   2. MATING CONNECTOR INTERFACE PART COLOR MUST BE SAME AS MATCHING KEYED HARNESS CONNECTOR ASSEMBLY.
   3. MUST BE VALIDATED FOR INDIVIDUAL DEVICE APPLICATION REQUIREMENTS.

B. 0.64MM PINS:
   1. BASE MATERIAL: COPPER ALLOY; CONDUCTIVITY >= 28% IACS AT 20°C; TENSILE STRENGTH >= 635 N/mm²;SURFACE ROUGHNESS $R_a$ 6 MAX.
   2. PLATING FINISH: SILVER (Ag). PLATING TO BE 1.9-3.3 um ELECTRODEPOSITED SEMI-BRIGHT SILVER OVER 1.25-2.25 um DUCTILE SULPHAMATE NICKEL PER NOTE 1(D).
   3. ANTI-TARNISH: SYNTHETIC HYDROCARBON CONTACT SURFACE FINISH OR EQUIVALENT APPLIED WITHOUT VOID TO CONTACT AREA (MIN 3.7mm FROM PIN TIP).

C. 2.8MM BLADE:
   1. BASE MATERIAL: COPPER ALLOY; CONDUCTIVITY>= 28% IACS AT 20°C; TENSILE STRENGTH >= 350 N/mm²; SURFACE ROUGHNESS $R_a$ 6 MAX.
   2. PLATING FINISH: TIN. PLATING TO BE 2.5-5.0 um ELECTRODEPOSITED TIN, MATTE FINISH OVER 1.25-2.5um DUCTILE SULPHAMATE NICKEL PER NOTE 1(D).

D. PLATING REQUIREMENTS:

   1. SILVER PLATING
      a. 99.5% PURE SEMI-BRIGHT WITH NO ORGANIC BRIGHTNERS OR CHROMATES.

   2. NICKEL PLATING
      a. ELECTRODEPOSITED DUCTILE SULFAMATE NICKEL WITH A NON-BRIGHTENED FINISH. NO ORGANIC OR BRIGHTENING AGENTS SHALL BE ALLOWED.
      b. SHALL ONLY BE USED AS AN UNDERLYING PLATING AND MAY NOT BE USED AS AN ELECTRICAL CONTACT SURFACE PLATING.
      c. SHALL BE NODULE FREE WHEN VIEWED AT 10X MAGNIFICATION IN MEASURED IN CONTACT SURFACE AREA PLUS 0.5MM PERIMETER AROUND THE CONTACT SURFACE AREA.
      d. ALL PLATINGS SHALL HAVE A 1.0% MAXIMUM BY WEIGHT IMPURITIES. IMPURITIES ARE DEFINED AS ALL ELEMENTS NOT THE PRIMARY PLATING OR HARDENING AGENT IF APPLICABLE, AS DETERMINED BY WET CHEMICAL ANALYSIS OR AUGER METHOD. NO SINGLE IMPURITY SHALL EXCEED 0.1% MAXIMUM BY WEIGHT.

   3. TESTING
      a. THICKNESS TO BE MEASURED IN CONTACT SURFACE AREA PLUS 0.5MM PERIMETER AROUND THE CONTACT SURFACE AREA AS DESIGNATED IN THE DRAWING. THICKNESS SHALL BE DETERMINED BY METHOD OF X-RAY (XRF).
      b. PLATING ADHESION SHALL BE TESTED BY A BEND TEST FOR ALL METALS. THE TEST SAMPLE SHALL BE BENT 90 DEGREES TO DETERMINE DEPOSIT ADHESION. TESTING SHALL BE COMPLETED IN ACCORDANCE WITH ASTM SPEC B571.

002C

2. DESIGN - GENERAL:

A. THIS IS A 100% CAD GENERATED PART. THE CAD MATHEMATICAL DATA IS THE MASTER FOR THIS PART. FOR DIMENSIONAL OR ANY INFORMATION NOT SHOWN ON THIS DRAWING, ANALYZE THE CAD MODEL.
B. TOLERANCES:
   1. LINEAR  0.X ± 0.30
              0.XX ± 0.10
              0.XXX ± 0.10
   2. ANGULAR  X° ± 3°
   3. ⌓ | 1.0 | A | B | C
C. MINIMUM WALL THICKNESS REQUIRED: 1.3mm.
D. CORNERS SHOWN AS SHARP TO BE R 0.2 MAX.
E. LETTERING SHALL BE 0.15 MAX RAISED IN 0.20 MAX RECESS PAD. THIS INCLUDES MATERIAL CODE, RECYCLING CODE, CAVITY ID AND DATE CODE.
F-1. PARTS MUST BE FREE OF DISCOLORATION, SALT RESIDUE AND OTHER IMPERFECTIONS THAT AFFECT FIT OR FUNCTION.
F-2. SCRATCHES OR DENTS NOT TO EXCEED 0.013mm IN DEPTH.
G. FOLLOWING PRODUCTION CODES TO BE PERMANENTLY MARKED & HUMAN READABLE TO A LETTER HEIGHT OF 1.5 ±0.5MM X 0.3 MAX DEEP
   1. MATERIAL #: XXXXX-XXXX
   2. DATE CODE: JJJY (JULIAN DAY, LAST DIGIT OF YEAR)
   3. INSPECTION MACHINE CODE + SERIAL #: X_XXXXX

3. DESIGN - MANUFACTURING:

A. DRAFT TO BE WITHIN TOLERANCE.
B. ALLOWABLE FLASH MAX 0.2 HIGH X MAX 0.13 THICK.
C. ALLOWABLE PARTING LINE MISMATCH 0.2 MAX.
D. EJECTOR PINS MARK TO BE FLUSH TO 0.25 MAX DEPRESSED.
E. ALLOWABLE GATE VESTIGE FLUSH TO 0.25 MAX PROTRUSION.
F. NO EXTERNAL MOLD RELEASE AGENT ALLOWED DURING MANUFACTURING.
G. STEEL THAT FORMS THE INDICATED SURFACE MUST BE POLISHED WITH A DIAMOND FINISH (SPI A-2) OVER THE FULL PERIPHERY OF THE TOOL. SURFACE MUST HAVE NO MISMATCH.
H. ANY PROCESS LUBRICANT REMAINING ON THE TERMINAL MUST NOT VARNISH OR DEGRADE IT'S ELECTRICAL PERFORMANCE UP TO A MAXIMUM CLASS AMBIENT TEMPERATURE PER SAE USCAR-2 FOR 1008 HOURS. PROCESS LUBRICANTS SHOULD BE APPROVED BY THE RESPONSIBLE ENGINEER.
J. OPTIONAL FEATURES PROVIDED FOR AUTOMATION.
K. PART MUST BE FREE FROM BURRS AND SHARP EDGES, WHICH MIGHT BE DETRIMENTAL TO SATISFACTORY ASSEMBLY, SAFE HANDLING OR FUNCTION OF PART.
L. PARTS AS DELIVERED TO ASSEMBLY SHALL BE CLEAN AND FREE OF DEBRIS, RESIDUAL ABRASIVE MATERIAL AND CORROSION PRODUCTS ADVERESLY AFFECTING FUNCTION OR APPEARENCE.
M. RESTRICTED AND REPORTABLE SUBSTANCES FOR PARTS PER GMW3059.

# NOTES: UNLESS OTHERWISE SPECIFIED

4. SYSTEM REQUIREMENTS:

   A. HARNESS CONNECTOR IS COMPATIBLE WITH THE FOLLOWING SAE WIRE SIZE NO'S:
      14, MEETING SAE J1128
      18, MEETING SAE J1128, MAX O.D. OF 2.06 MM
      20, MEETING SAE J1128
      22, MEETING SAE J1128, MIN O.D. OF 1.47 MM

   B. CABLE TIE SPECIFICATIONS:
      1. CABLE TIE:
         TENSILE RATING: 220N / (50lbs) MIN
         TIE LENGTH: 186mm MIN
         TIE WIDTH: 4.75mm MAX
         MATERIAL: NYLON
      2. INSTALLATION:
         CABLE TIE TENSION: 190N MIN
      3. DRESSED WIRE BUNDLE PACKAGING: SEE FIG. 1

   C. WHEN MATED WITH COMPONENT CONNECTOR INTERFACE AND/OR DRESS COVER, HARNESS CONNECTOR SYSTEM CONFORMS TO THE FOLLOWING:
      1. SAE/USCAR-2, REV: 3 APRIL, 2001; CLASS 3
      2. FIELD CORRELATED LIFE TEST, SAE/USCAR-20, NOV. 2001
      3. GMW #3191 AUGUST 22, 2000 (DRAFT); TEMPERATURE CLASS 3, SEALING CLASS 1, VIBRATION CLASS 2
      4. RESTRICTED AND REPORTABLE CHEMICALS PER GMW #3059, REV: D AUGUST 2002
      5. TPA USER FORCES (FULLY POPULATED WITH TERMINALS)
         a. REMOVAL FROM LOCK TO PRE-SET: <=120N

   D. WIRE SPECIFICATIONS:
      1. WIRE SURFACE MUST BE FREE OF SCRATCHES, GROOVES OR DENTS WHERE FUNCTIONAL

5. TERMINAL CURRENT RATINGS:

   ALL TESTING DONE IN ACCORDANCE WITH USCAR-2 REV5 SECTION 5.3

   A. MX64 RCPT TERM
      1. MX64 RCPT TERM Ag 18/20 GAGE CRIMPED TO SAE WIRE SIZE NO.18 AND MATED TO MX123 0.64MM PIN: 11.3 AMPS
      2. MX64 RCPT TERM Ag 22 GAGE CRIMPED TO SAE WIRE SIZE NO.22 AND MATED TO MX123 0.64MM PIN:8.5 AMPS

| WIRE | CURRENT RATING | | | |
|---|---|---|---|---|
| | 23'C | 85'C | 105'C | 125'C |
| 18AWG | 11.3A | 11.3A | 9.5A | 6.6A |
| 20AWG | 10.0A | 10.0A | 8.3A | 5.7A |
| 22AWG | 8.6A | 8.6A | 7.1A | 5.0A |

   B. 2.8MM RCPT TERM
      1. 2.8MM RCPT TERM TIN 14 GAGE CRIMPED TO SAE WIRE SIZE NO.14 AND MATED TO MX123 2.8MM BLADE: 25.6 AMPS

6. CONTACT MOLEX AUTOMOTIVE FOR AVAILABLE CUSTOM PATTERNS OF CAVITIES OPEN FOR CIRCUITS

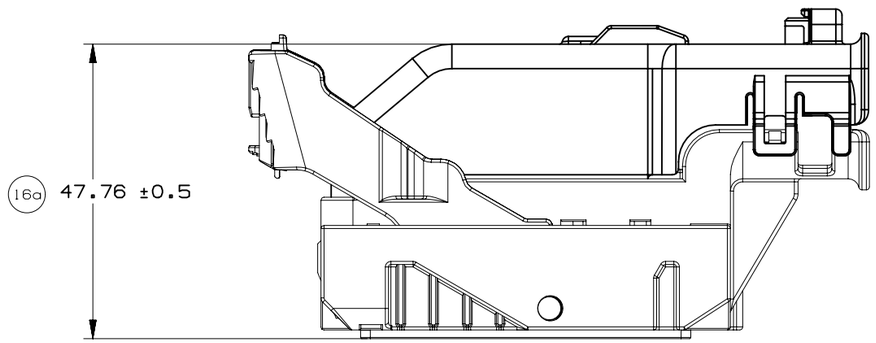


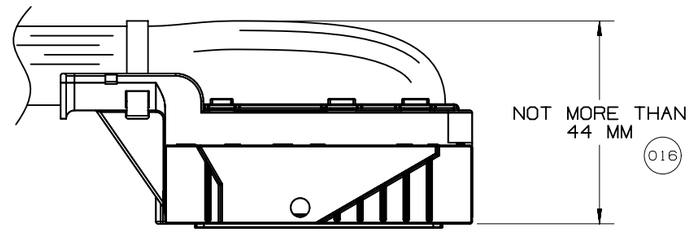


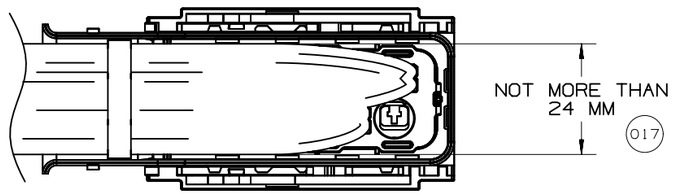


Fig. 1

| | | | | | | | |
|---|---|---|---|---|---|---|---|
| | GM | PAGE TITLE<br>WIRE DRESS PACKAGING DIMENSIONS | | DRAWING NUMBER<br>12642695 | DWG STATUS<br>ST: R / REV: 002 / PDI: | | PAGE NUMBER<br>8 OF 21 |

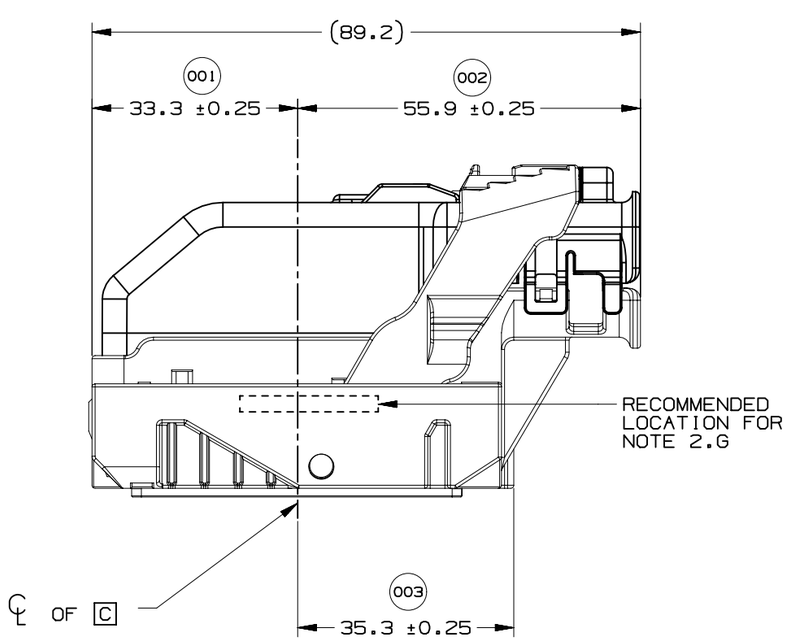


WIRE DRESS OPTION 0 SHOWN

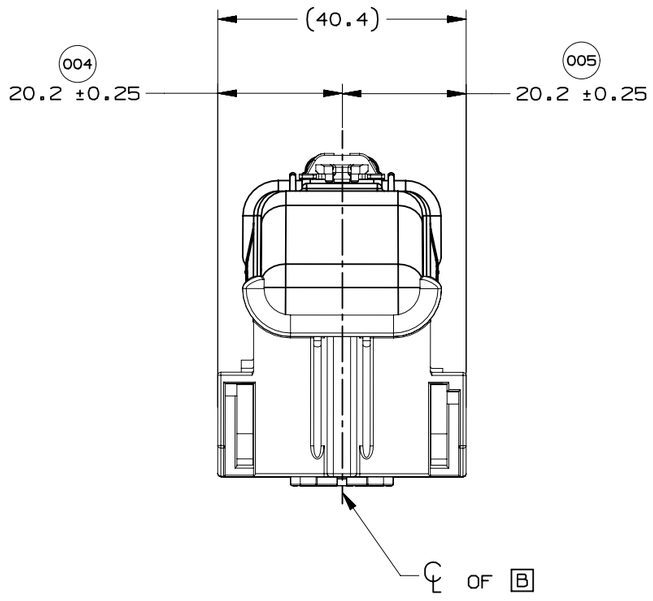


WIRE DRESS OPTION 0 SHOWN

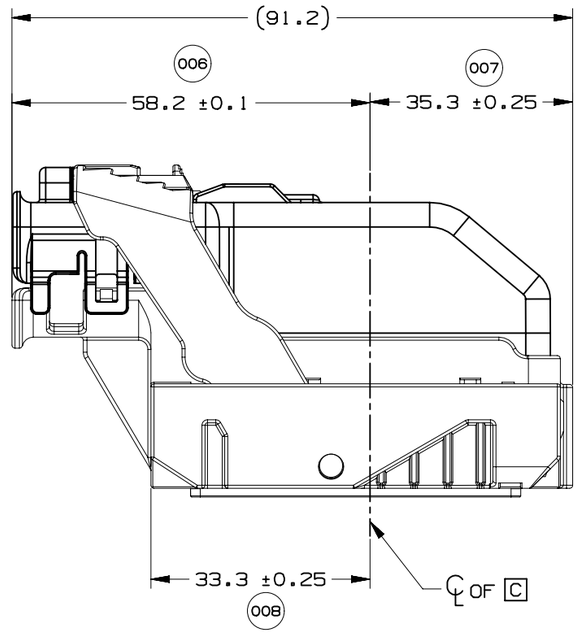


WIRE DRESS OPTION 9 SHOWN

| | | | | | | | |
|---|---|---|---|---|---|---|---|
| | GM | PAGE TITLE<br>LOCATION AND PACKAGING DIMENSIONS<br>REFERENCING INTERFACE DATUMS B & C | | DRAWING NUMBER<br>12642695 | DWG STATUS<br>ST: R / REV: 002 / PDI: | | PAGE NUMBER<br>9 OF 21 |

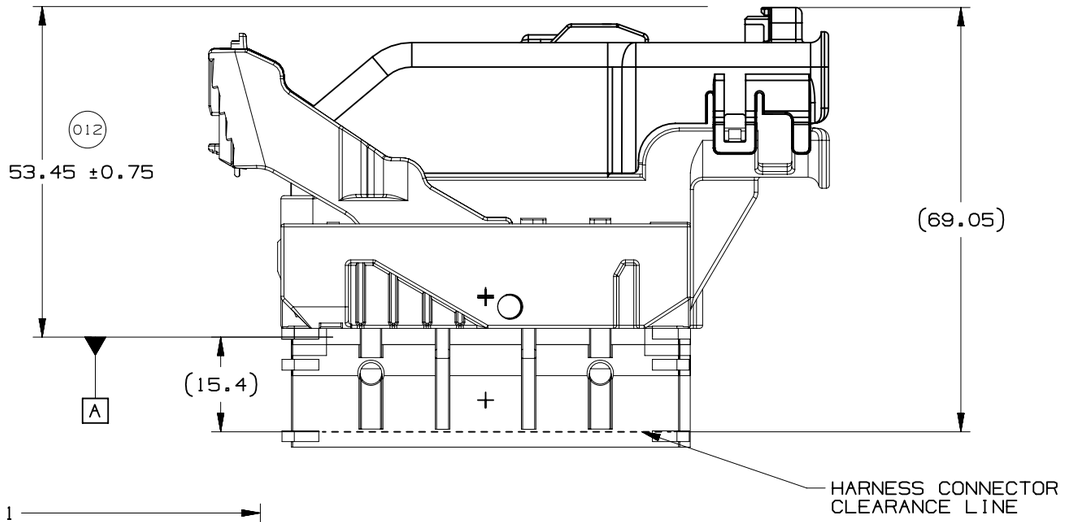


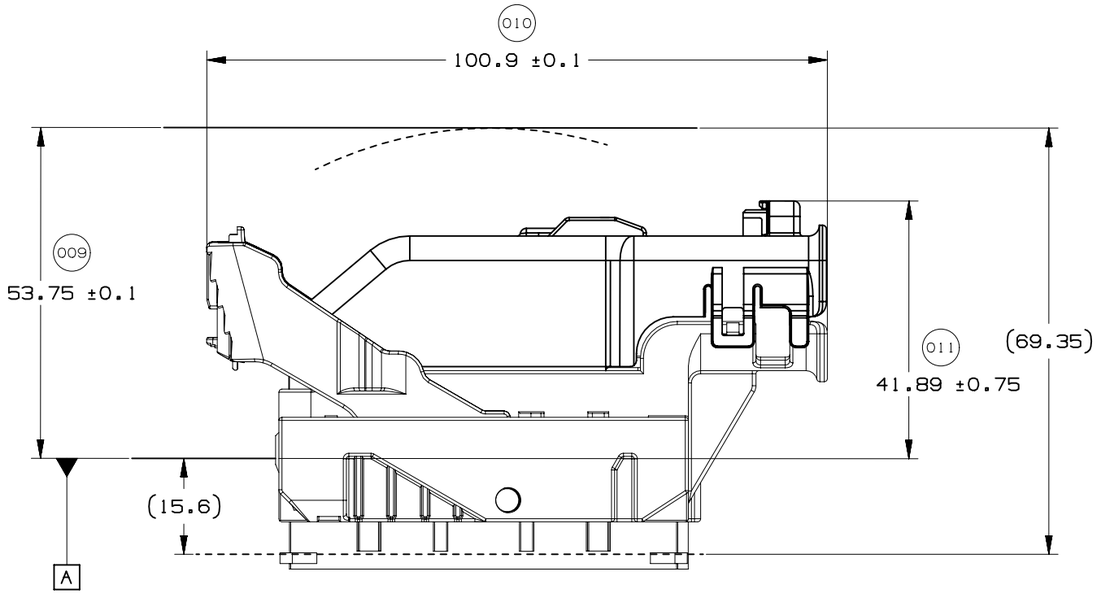


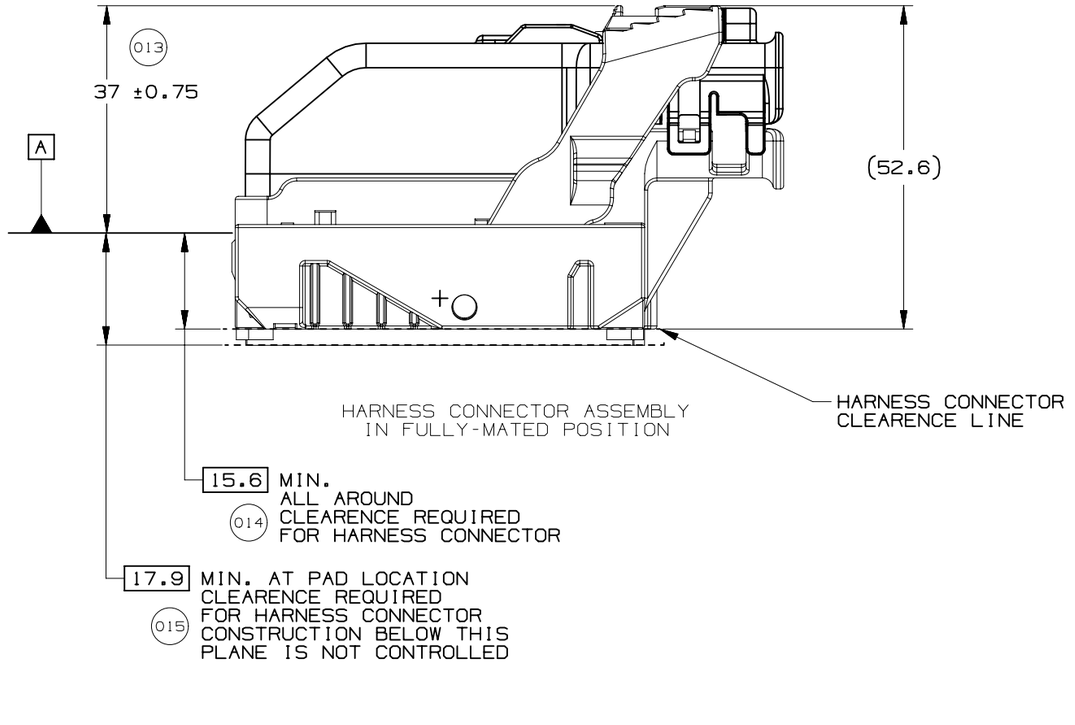


| | | | | | | |
|---|---|---|---|---|---|---|
| | GM | PAGE TITLE<br>LOCATION AND PACKAGING DIMENSIONS<br>REFERENCING INTERFACE DATUM A | | DRAWING NUMBER<br>12642695 | DWG STATUS<br>ST: R / REV: 002 / PDI: | PAGE NUMBER<br>10 OF 21 |

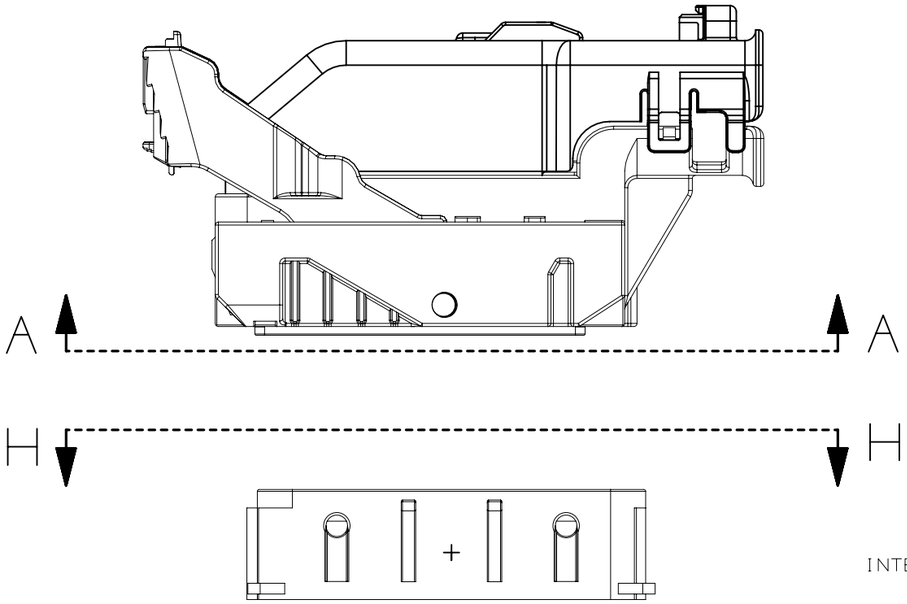


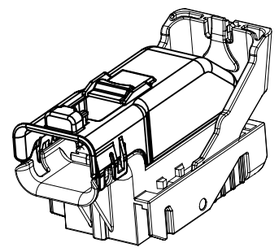

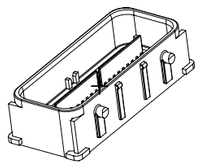

NOTE: REFERENCE THE COMPONENT TABLE FOR KEY OPTIONS AND CONFIGURATIONS

INTERFACE SIDE SHOWN ON ALL SECTION VIEWS

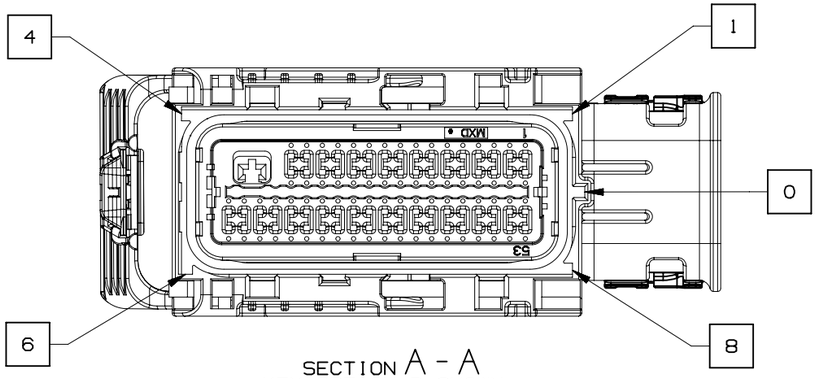


SECTION A - A
KEY OPTION B SHOWN

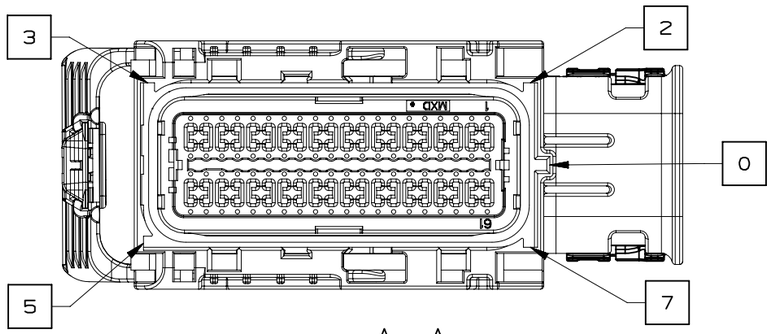


SECTION A - A
KEY OPTION K SHOWN

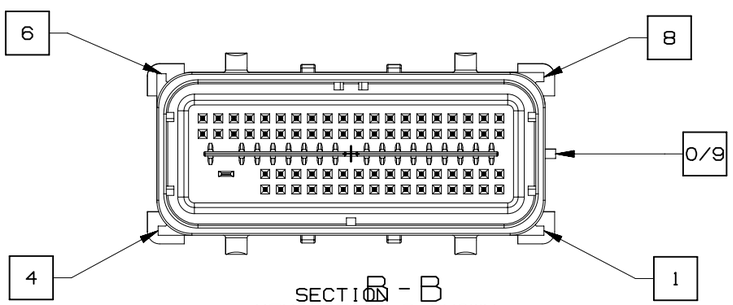


SECTION B - B
KEY OPTION B SHOWN

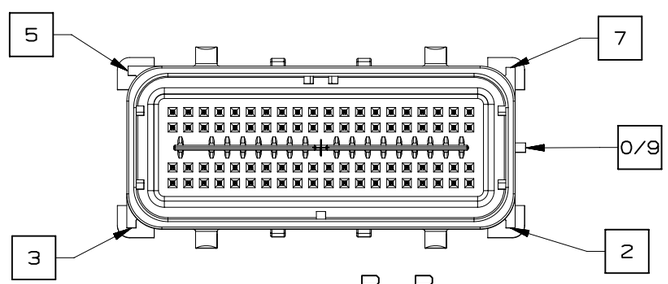


SECTION B - B
KEY OPTION K SHOWN

| | | | | | | | |
|---|---|---|---|---|---|---|---|
| | GM | PAGE TITLE: KEY ID REF - WIRE DRESS OPTION 0 | | DRAWING NUMBER: 12642695 | DWG STATUS ST: R | REV: 002 | PDI: | PAGE NUMBER: 11 OF 21 |

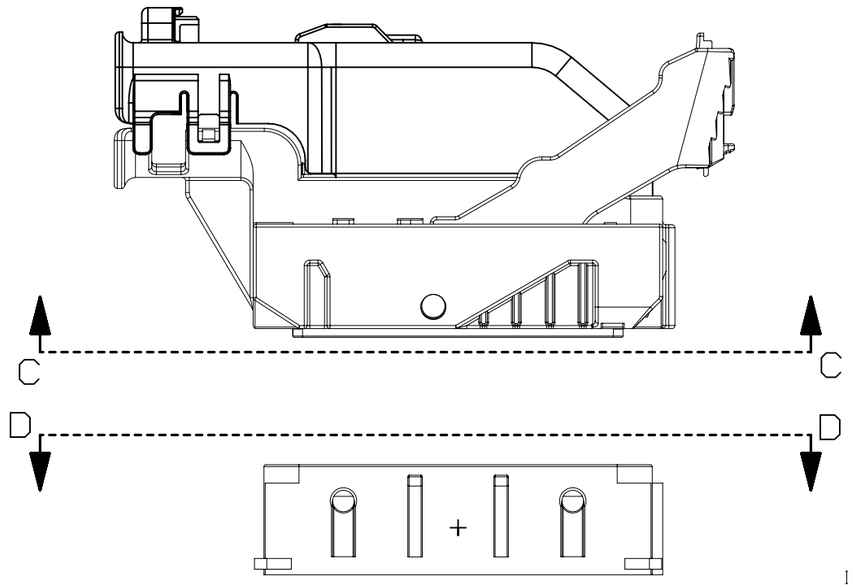


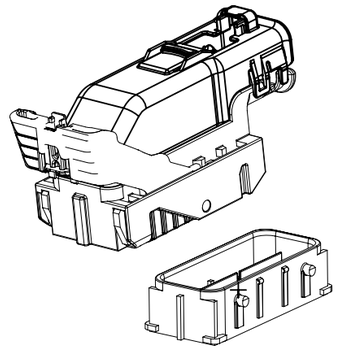

NOTE: REFERENCE THE COMPONENT TABLE
FOR KEY OPTIONS AND CONFIGURATIONS

INTERFACE SIDE SHOWN ON ALL SECTION VIEWS

VIEW V

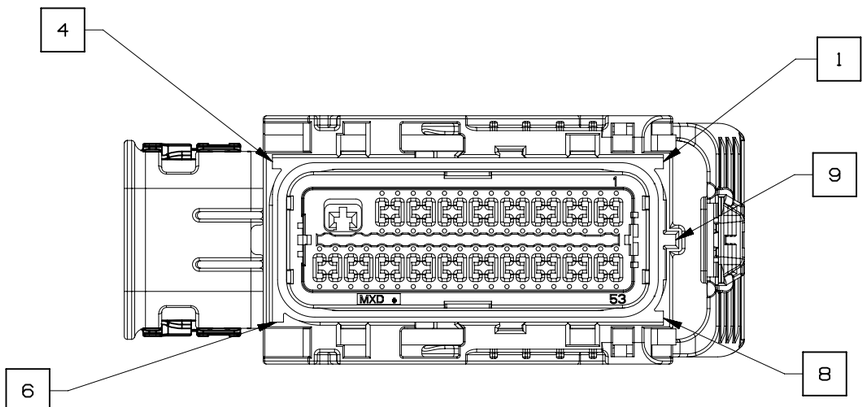


SECTION C-C
KEY OPTION B SHOWN

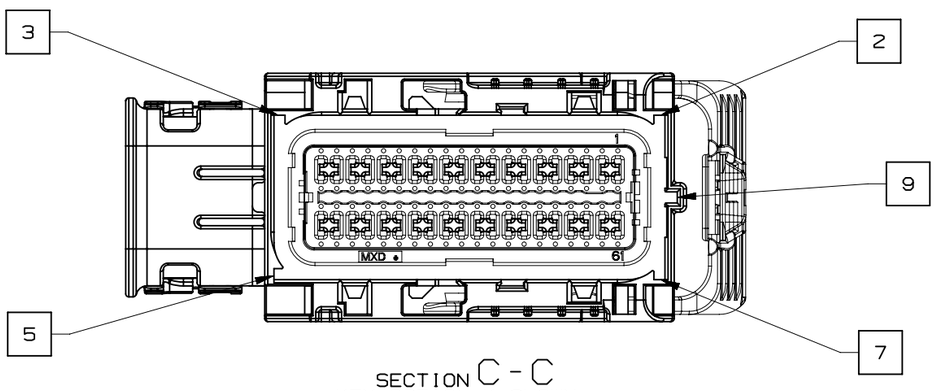


SECTION C - C
KEY OPTION K SHOWN

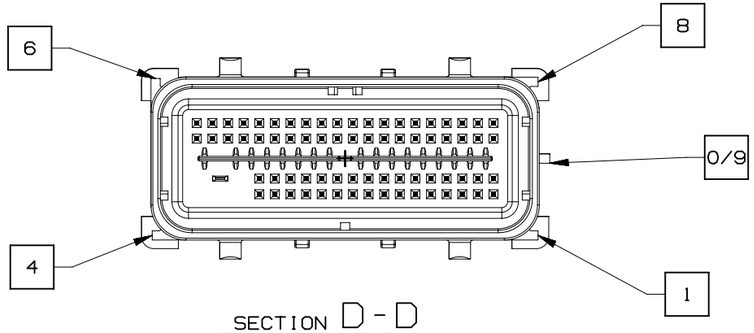


SECTION D - D
KEY OPTION B SHOWN

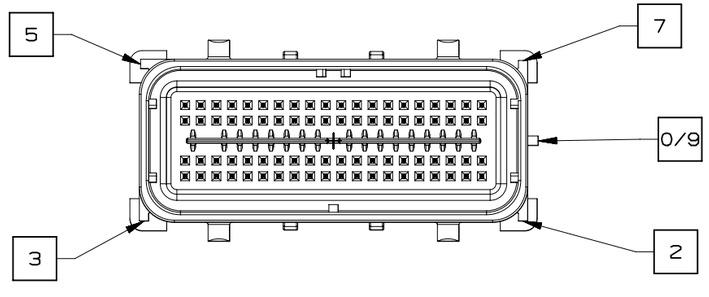


SECTION D - D
KEY OPTION K SHOWN

| | | | | | | |
|---|---|---|---|---|---|---|
| | GM | PAGE TITLE: KEY ID REF - WIRE DRESS OPTION 9 | | DRAWING NUMBER: 12642695 | DWG STATUS: ST R / REV 002 / PDI | PAGE NUMBER: 12 OF 21 |

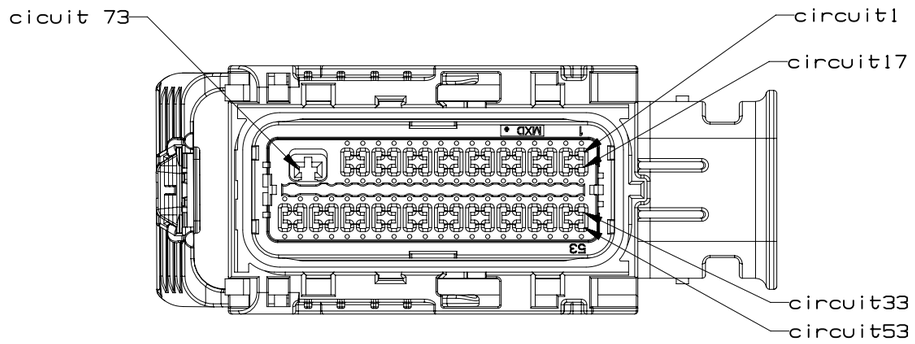


73 CKT HARNESS CONNECTOR ASSEMBLY
WIRE DRESS OPTION 0

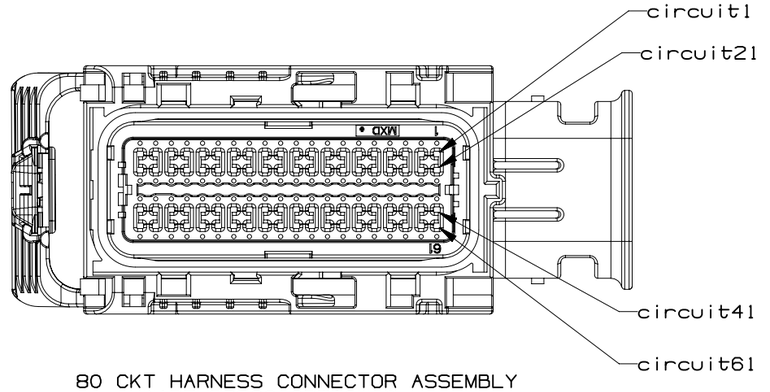


80 CKT HARNESS CONNECTOR ASSEMBLY
WIRE DRESS OPTION 0

INTERFACE SIDE SHOWN ON ALL VIEWS

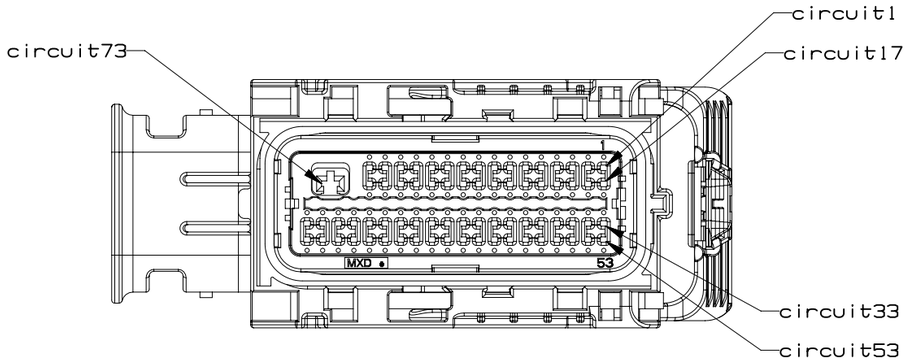


73 CKT HARNESS CONNECTOR ASSEMBLY
WIRE DRESS OPTION 9

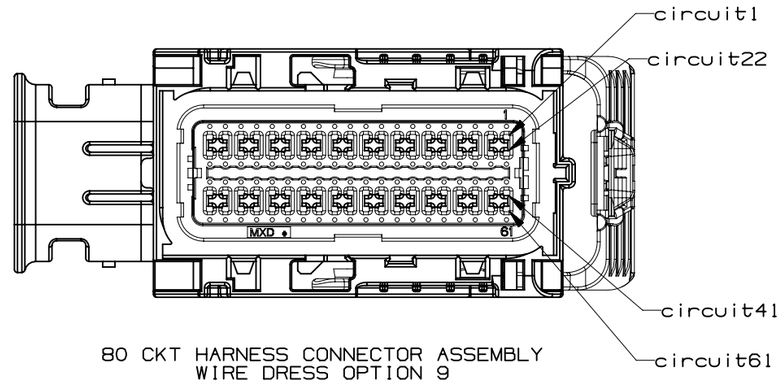


80 CKT HARNESS CONNECTOR ASSEMBLY
WIRE DRESS OPTION 9

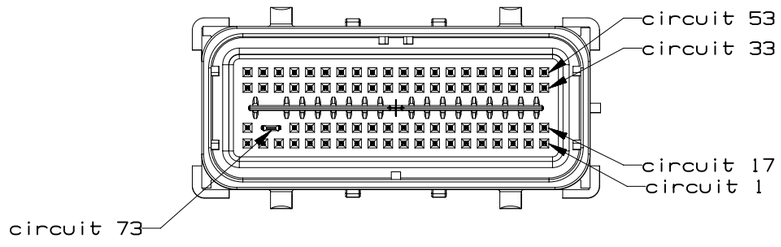


73 CKT COMPONENT CONNECTOR INTERFACE

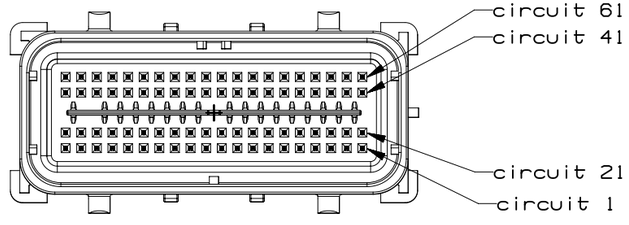


80 CKT COMPONENT CONNECTOR INTERFACE

| | | | | | | | |
|---|---|---|---|---|---|---|---|
| | GM | PAGE TITLE: CIRCUIT CONFIGURATIONS | | DRAWING NUMBER: 12642695 | DWG STATUS | | PAGE NUMBER |
| | | | | | ST: R | REV: 002 | PDI: | 13 OF 21 |

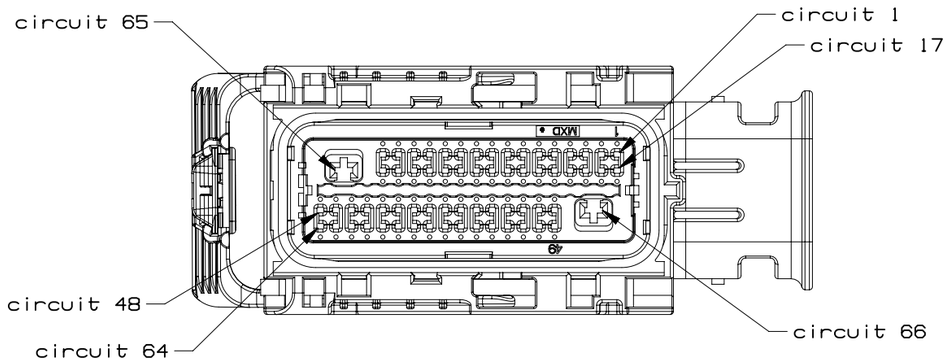


66 CKT HARNESS CONNECTOR ASSEMBLY
WIRE DRESS OPTION 0

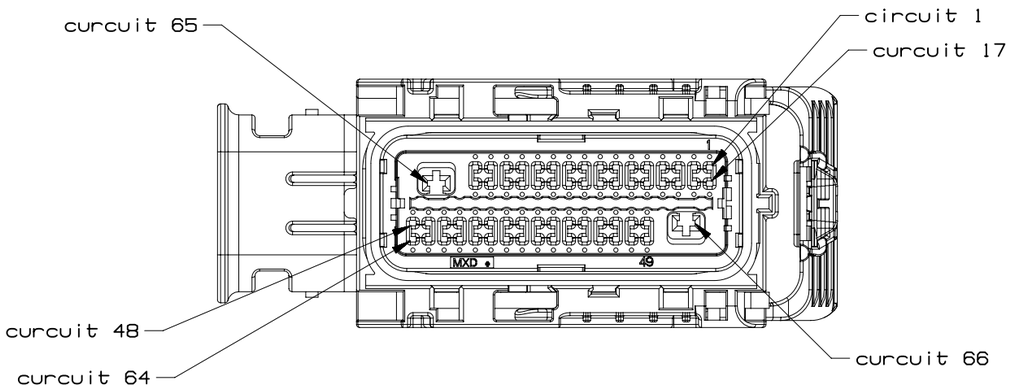


66 CKT HARNESS CONNECTOR ASSEMBLY
WIRE DRESS OPTION 9

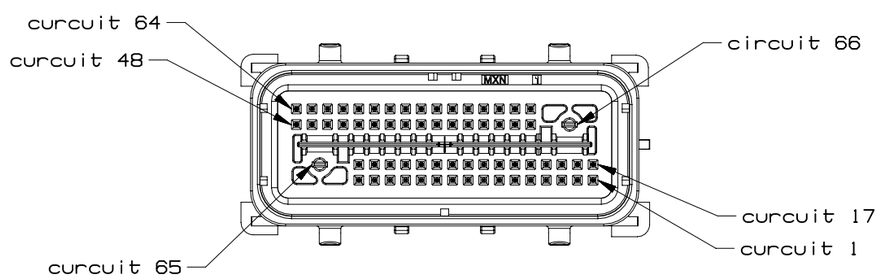


66 CKT COMPONENT CONNECTOR INTERFACE

| | | | | | | | |
|---|---|---|---|---|---|---|---|
| | GM | PAGE TITLE<br>CIRCUIT CONFIGURATIONS | | DRAWING NUMBER<br>12642695 | DWG STATUS<br>ST: R<br>REV: 002<br>PDI: | | PAGE NUMBER<br>14 OF 21 |

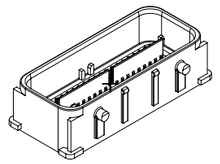

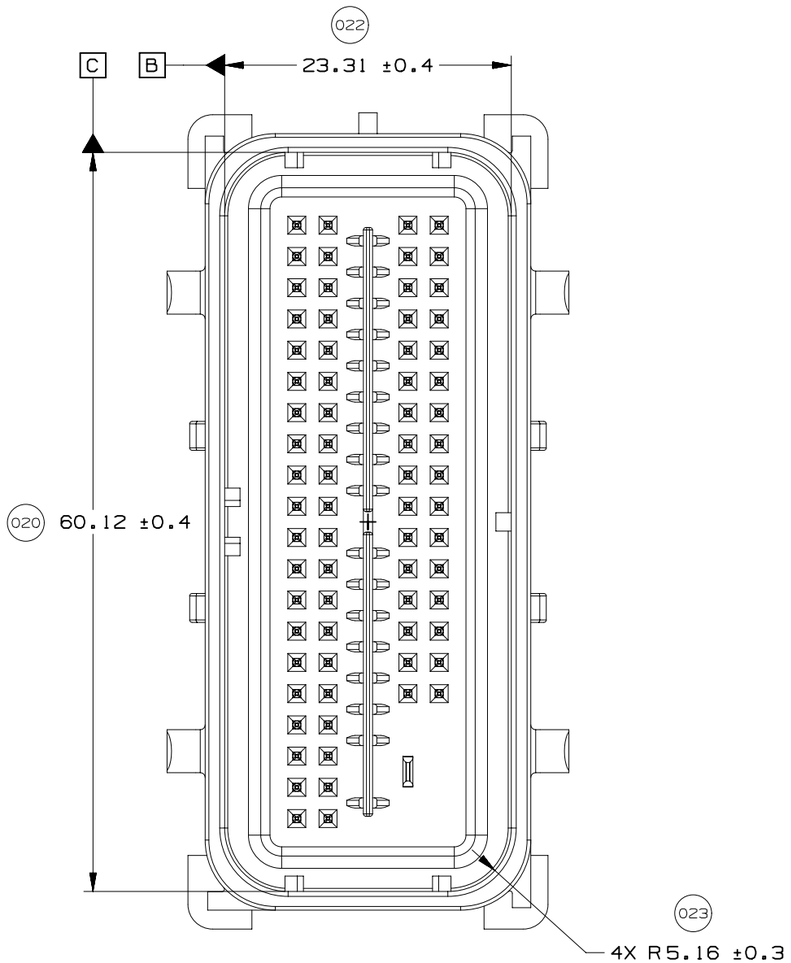


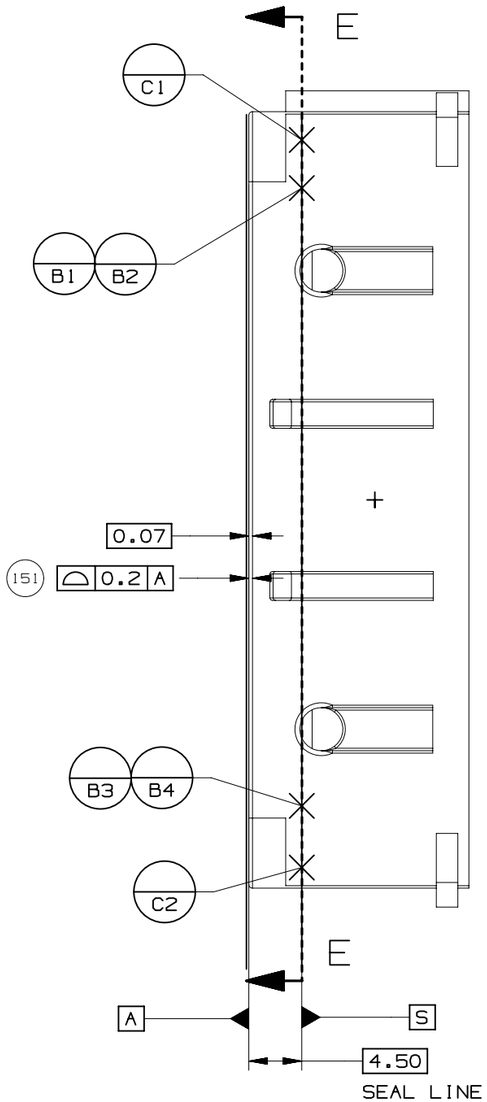


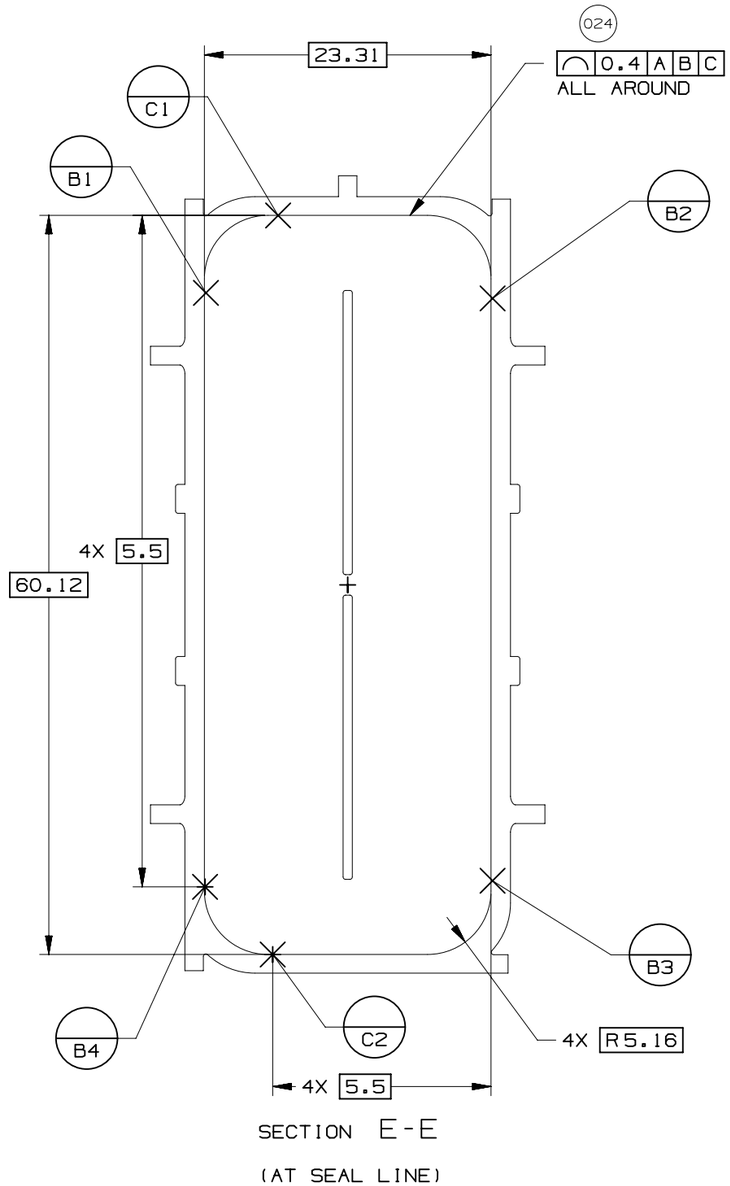


UNLESS SPECIFIED, TOLERANCE OF THE COMPONENT CONNECTOR INTERFACE TO BE 0.13 A B C

| | | | | | | |
|---|---|---|---|---|---|---|
| GM | PAGE TITLE: COMPONENT CONNECTOR INTERFACE | | DRAWING NUMBER: 12642695 | DWG STATUS ST: R | REV: 002 | PDI: | PAGE NUMBER: 15 OF 21 |

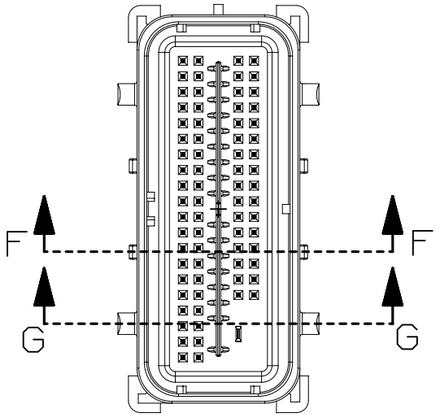


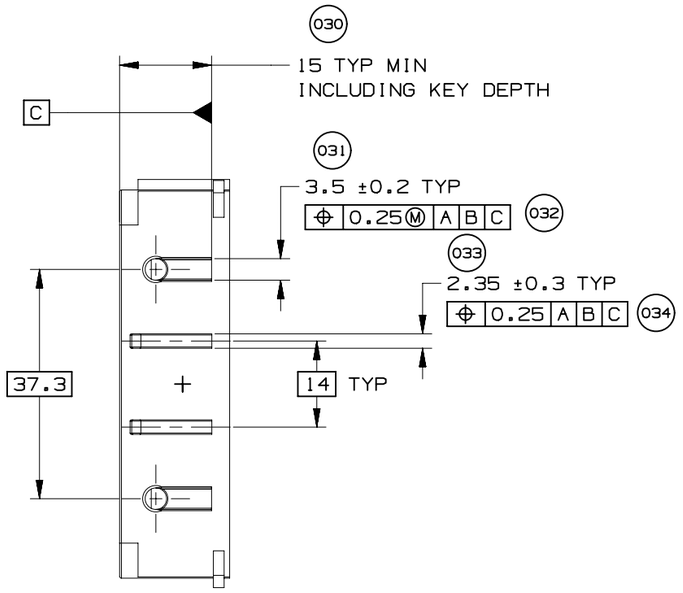


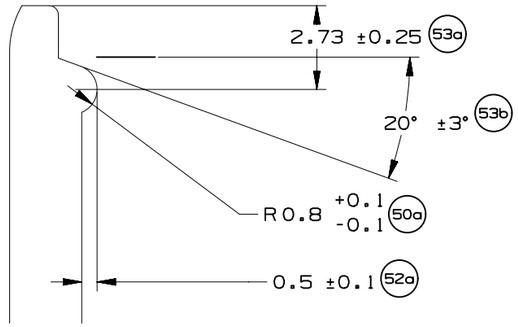


VIEW YY
SCALE 5:1

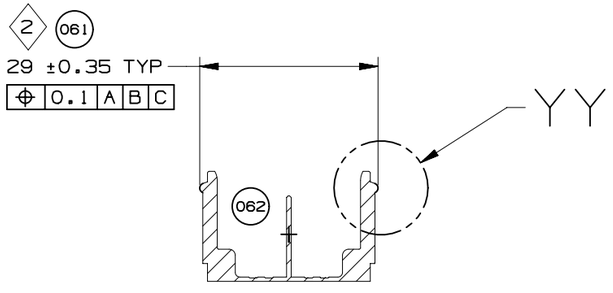


SECTION F-F

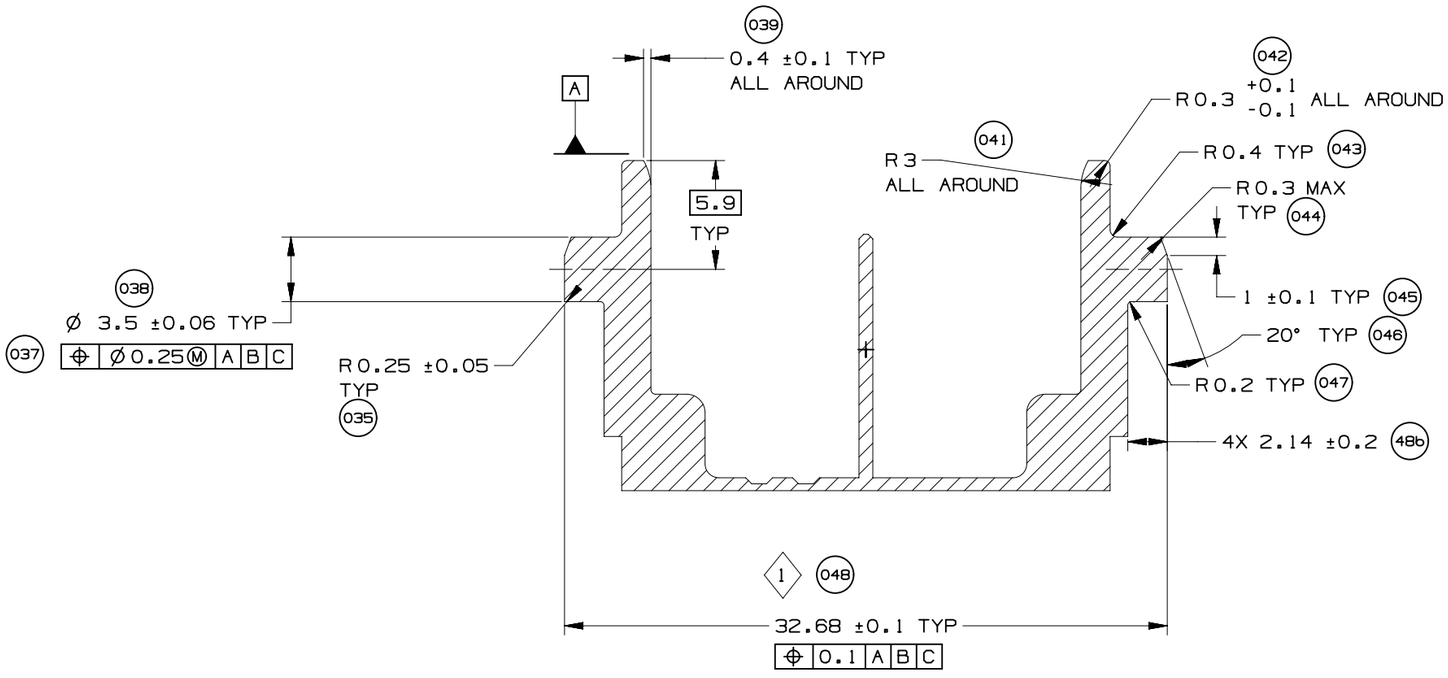


SECTION G-G
(CAM POST)

| | | | | | | | |
|---|---|---|---|---|---|---|---|
| | GM | PAGE TITLE<br>COMPONENT CONNECTOR INTERFACE | | DRAWING NUMBER<br>12642695 | DWG STATUS<br>ST: R / REV: 002 / PDI: | | PAGE NUMBER<br>16 OF 21 |

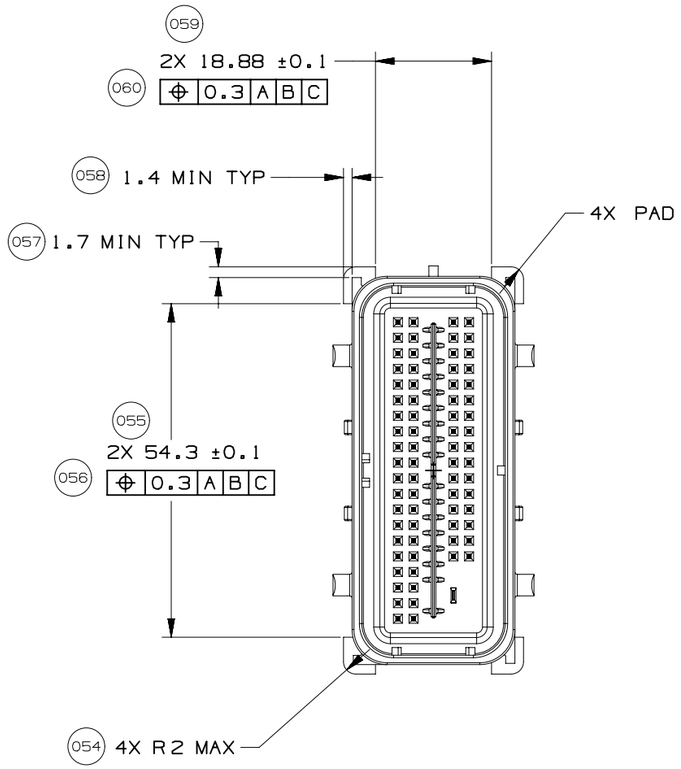


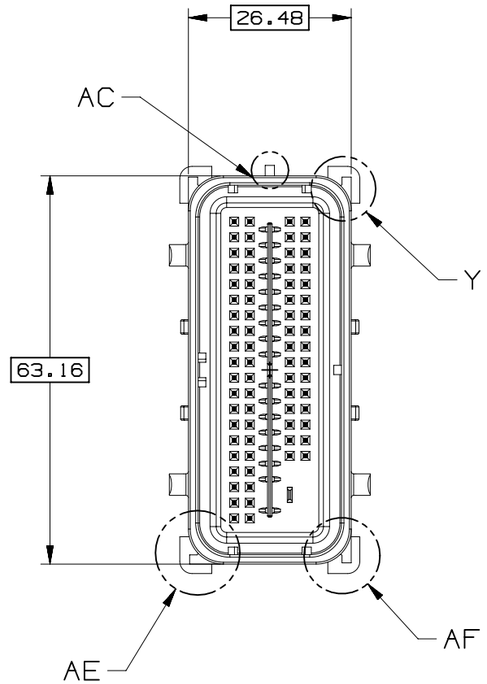


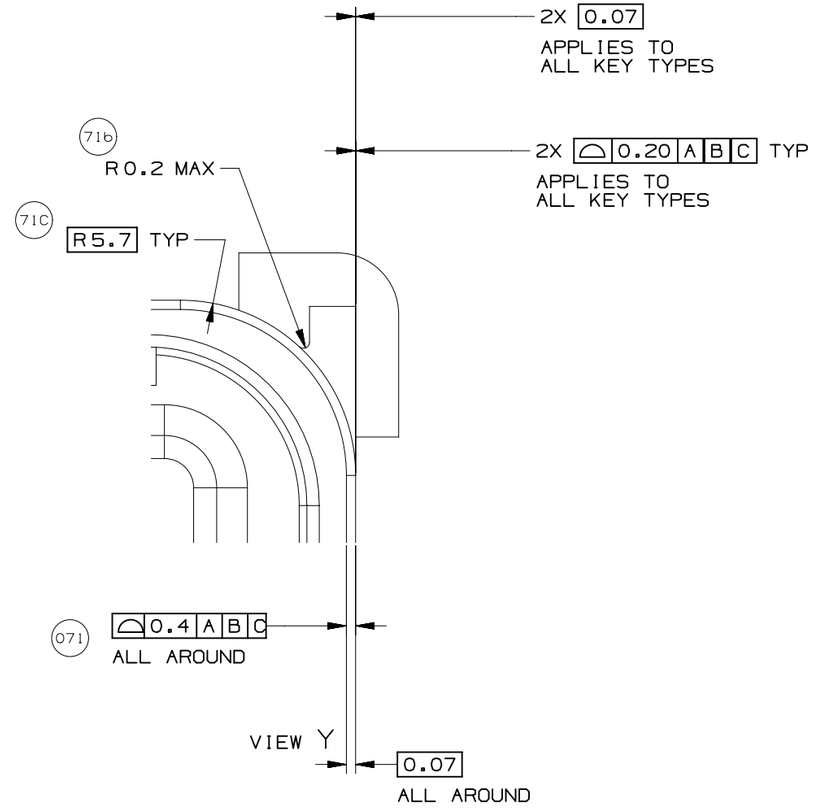


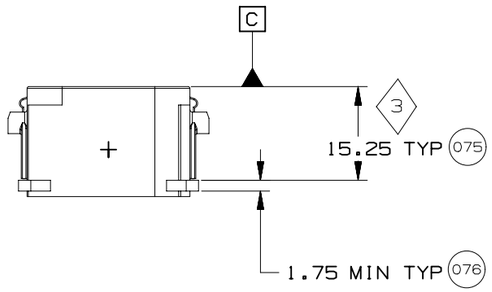


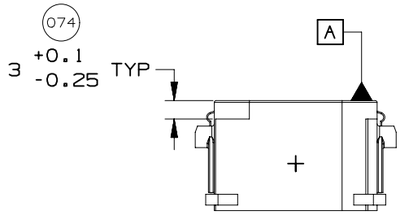


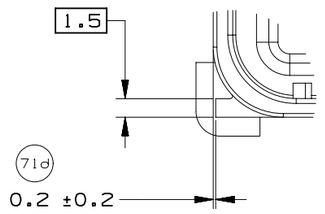


VIEW AE
KEY TYPE 2
SCALE 2:1

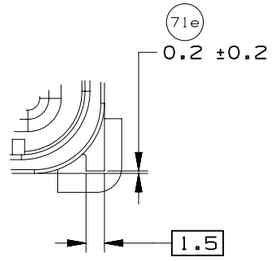


VIEW AF
KEY TYPE 1
SCALE 2:1

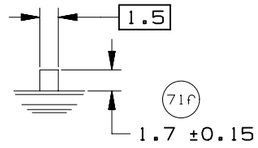


VIEW AC
KEY TYPE 3
SCALE 2:1

| | | | | | | |
|---|---|---|---|---|---|---|
| | GM | PAGE TITLE: COMPONENT CONNECTOR INTERFACE | | DRAWING NUMBER: 12642695 | DWG STATUS: ST R / REV 002 / PDI | PAGE NUMBER: 17 OF 21 |

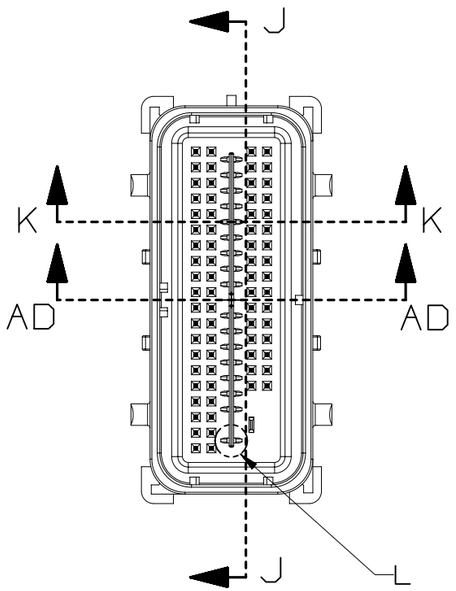


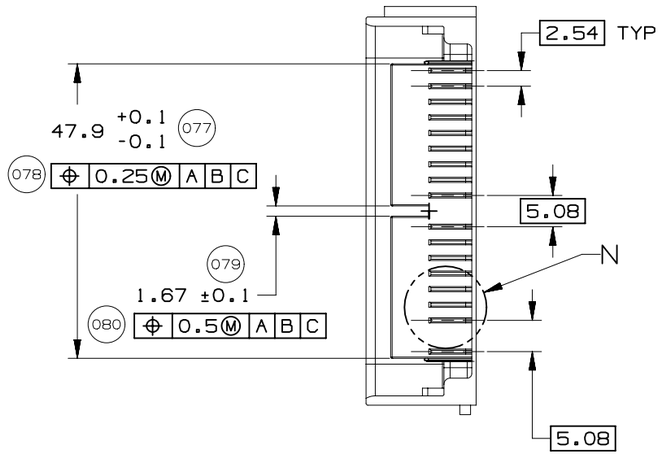


SECTION J-J

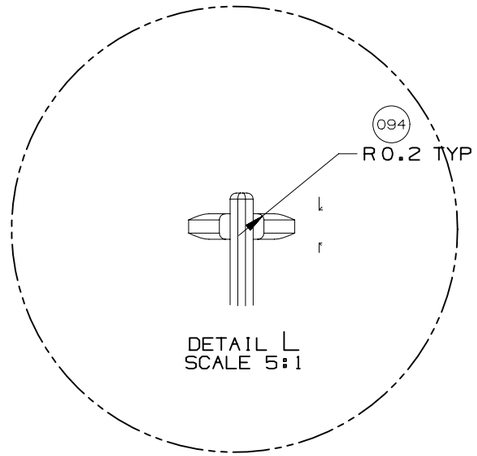


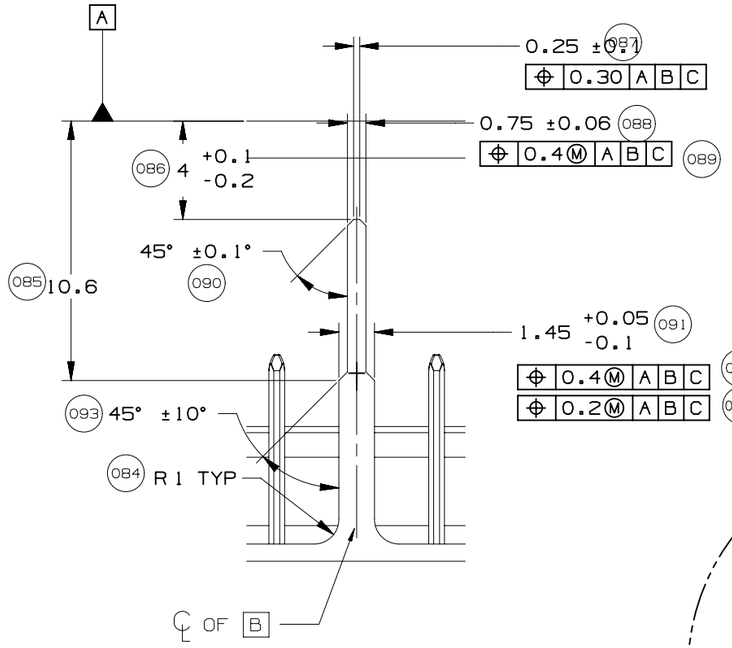


DETAIL M
TYPICAL
SCALE 4:1

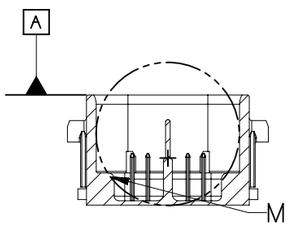


SECTION K-K

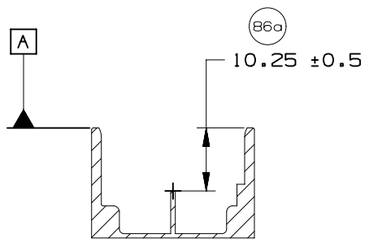


SECTION AD-AD

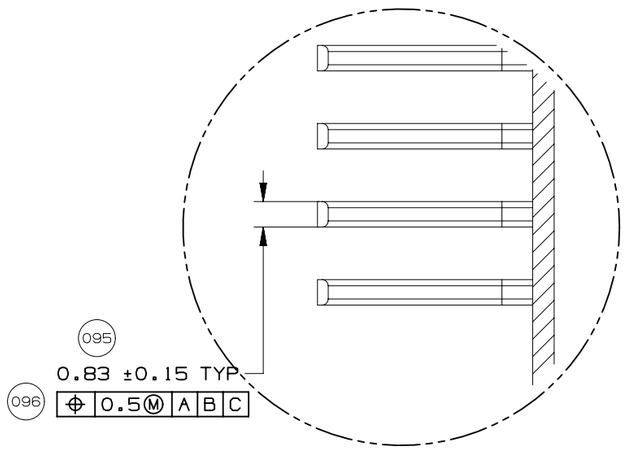


DETAIL N
SCALE 5:1

| | | | | | | |
|---|---|---|---|---|---|---|
| | GM | PAGE TITLE: COMPONENT CONNECTOR INTERFACE | | DRAWING NUMBER: 12642695 | DWG STATUS: ST R / REV 002 / PDI | PAGE NUMBER: 18 OF 21 |

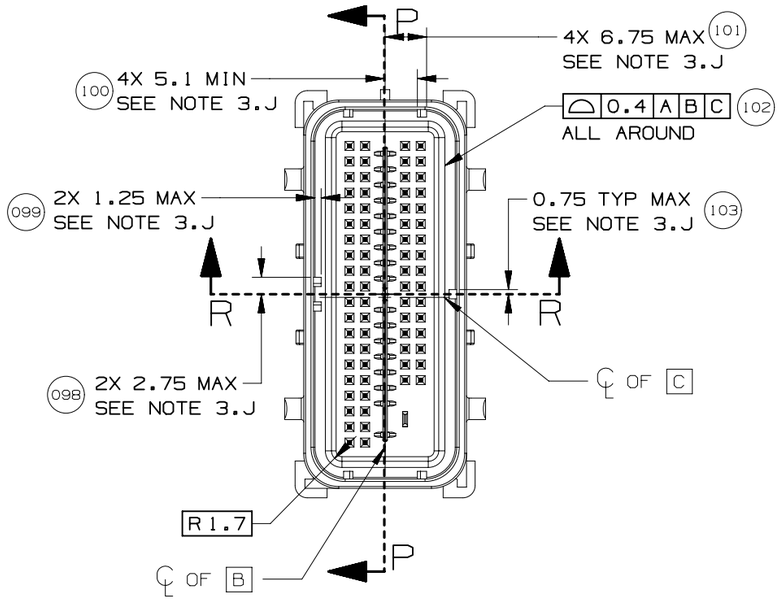


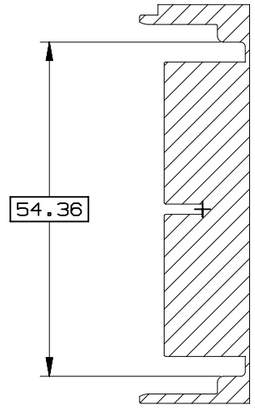


SECTION P-P

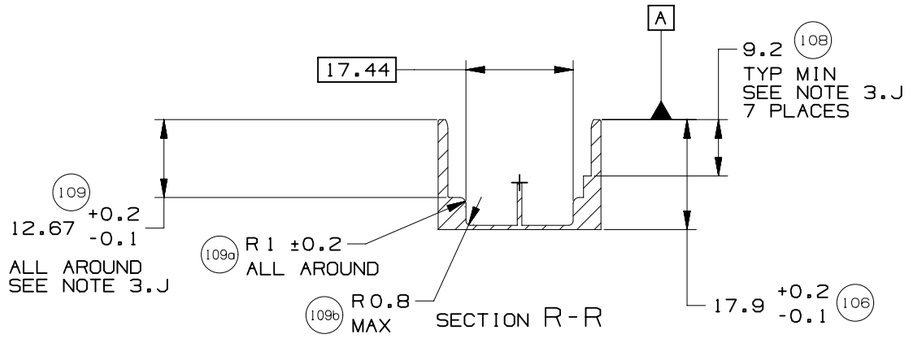


SECTION R-R

| | | | | | | |
|---|---|---|---|---|---|---|
| | GM | PAGE TITLE<br>COMPONENT CONNECTOR INTERFACE | | DRAWING NUMBER<br>12642695 | DWG STATUS<br>ST: R / REV: 002 / PDI: | PAGE NUMBER<br>19 OF 21 |

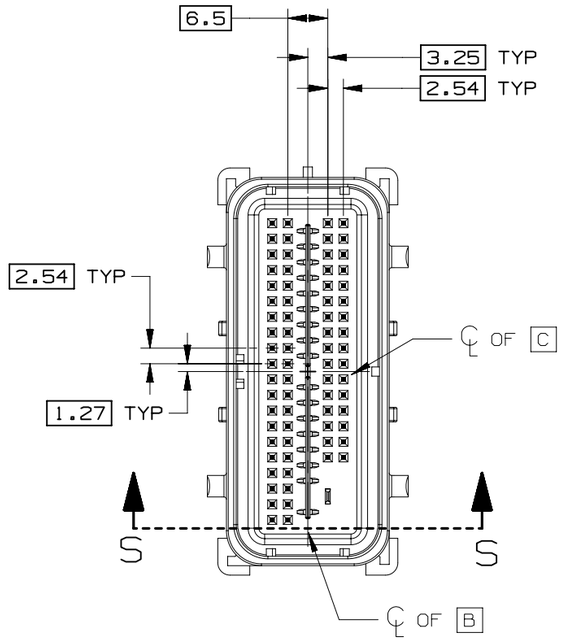


SECTION S-S

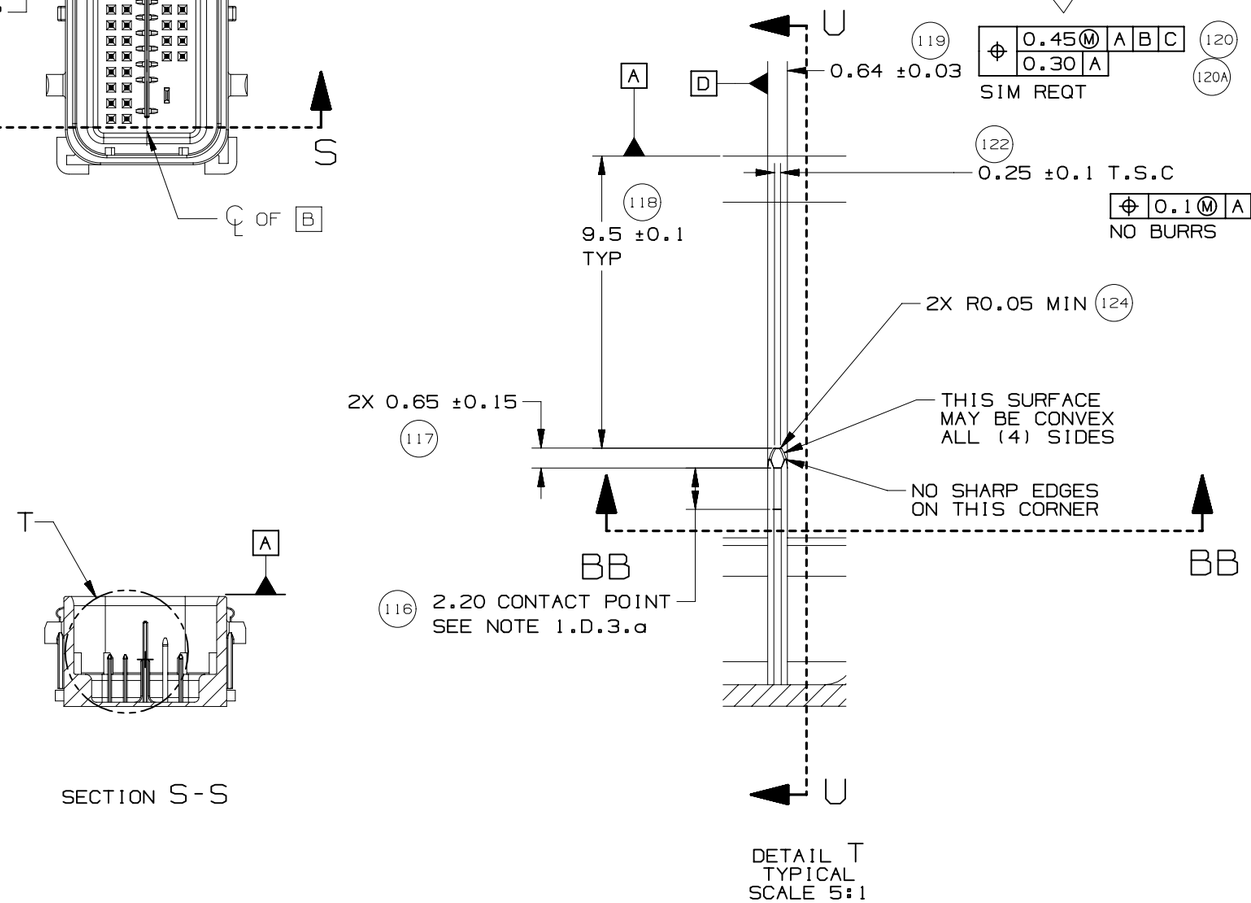


DETAIL T
TYPICAL
SCALE 5:1

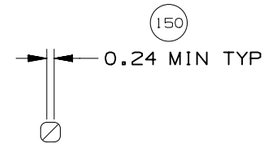


SECTION BB-BB

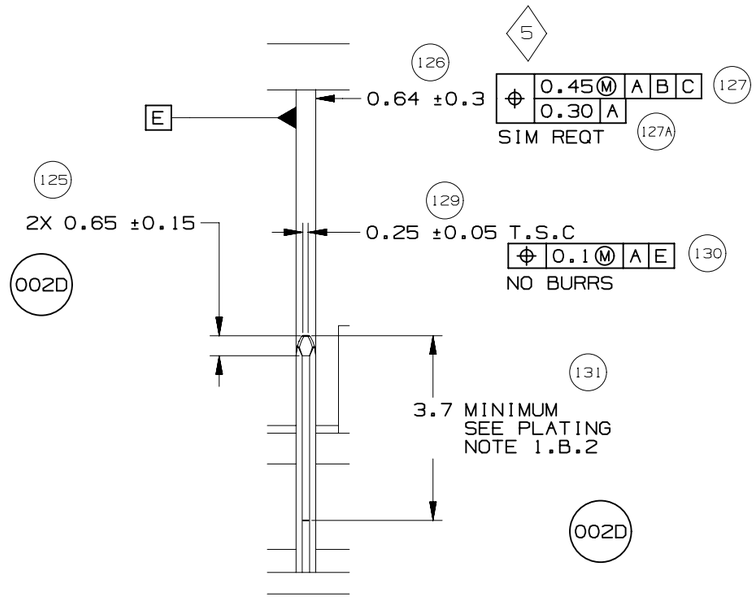


SECTION U-U

| | | | | | | |
|---|---|---|---|---|---|---|
| GM | PAGE TITLE: COMPONENT CONNECTOR INTERFACE | | DRAWING NUMBER: 12642695 | DWG STATUS ST: R | REV: 002 | PDI: | PAGE NUMBER: 20 OF 21 |

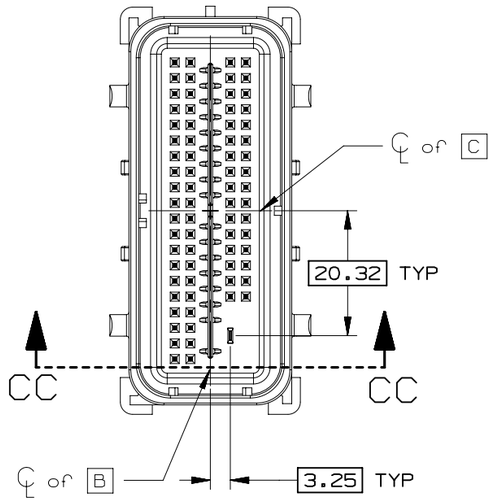


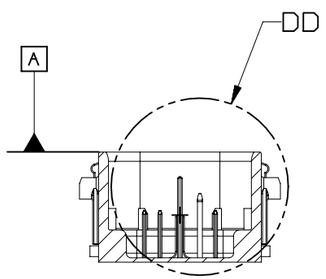


SECTION CC-CC

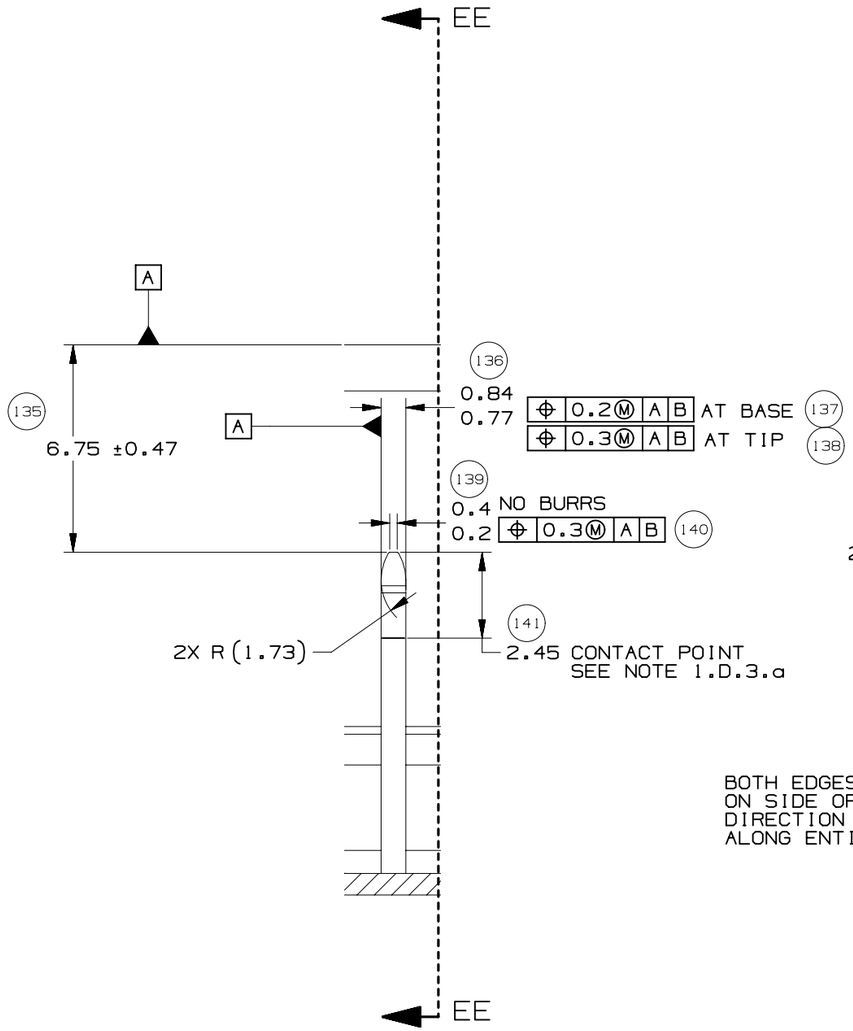


DETAIL DD
TYPICAL
SCALE 5:1

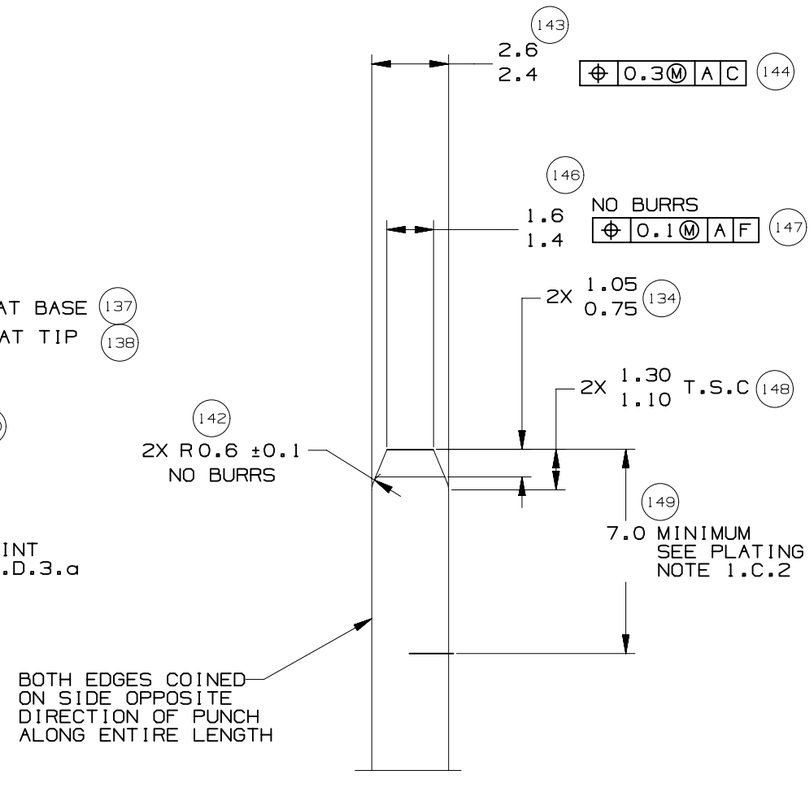


SECTION EE-EE
TYPICAL

| | | | | | | | |
|---|---|---|---|---|---|---|---|
| | GM | PAGE TITLE: COMPONENT CONNECTOR INTERFACE | | DRAWING NUMBER: 12642695 | DWG STATUS ST: R | REV: 002 | PDI: | PAGE NUMBER: 21 OF 21 |

| INDEX | |
|---|---|
| PAGE TITLE | PAGE |
| TITLE BLOCK | 1 |
| REVISION BLOCK | 2 |
| PART BLOCK | 3 |
| KPC BLOCK | 4 |
| COMPONENT TABLE | 5 |
| NOTES | 6 |
| NOTES | 7 |
| WIRE DRESS PACKAGING DIMENSIONS | 8 |
| LOCATION AND PACKAGING DIMENSIONS REFERENCING INTERFACE DATUMS B & C | 9 |
| LOCATION AND PACKAGING DIMENSIONS REFERENCING INTERFACE DATUM A | 10 |
| KEY ID REF - WIRE DRESS OPTION 0 | 11 |
| KEY ID REF - WIRE DRESS OPTION 9 | 12 |
| CIRCUIT CONFIGURATIONS | 13 |
| CIRCUIT CONFIGURATIONS | 14 |
| COMPONENT CONNECTOR INTERFACE | 15 |
| COMPONENT CONNECTOR INTERFACE | 16 |
| COMPONENT CONNECTOR INTERFACE | 17 |
| COMPONENT CONNECTOR INTERFACE | 18 |
| COMPONENT CONNECTOR INTERFACE | 19 |
| COMPONENT CONNECTOR INTERFACE | 20 |
| COMPONENT CONNECTOR INTERFACE | 21 |
| ADDITIONAL COMPONENTS REQUIRED | 22 |

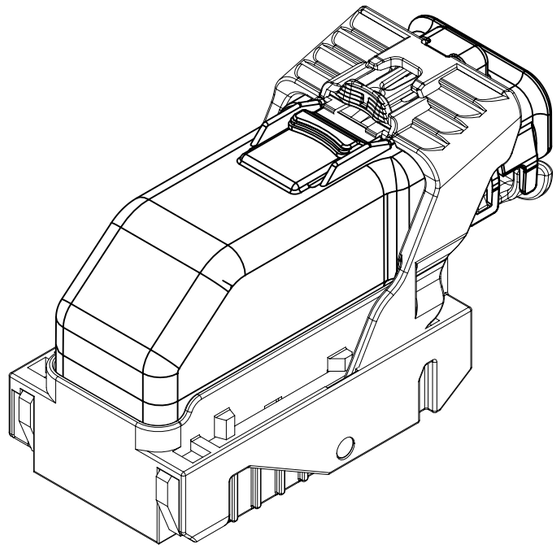

ISO VIEW

GM

**UNLESS OTHERWISE SPECIFIED:** THIS DOCUMENT IS IN ACCORDANCE WITH ASME Y14.5M-1994 AS AMMENDED BY THE GM GLOBAL DIMENSIONING AND TOLERANCING ADDENDUM-1997. ALL GEOMETRIC TOLERANCES AND RELATED DATUMS APPLY RFS. RULE #1 (PERFECT FORM AT MMC) DOES NOT APPLY WHEN A RELATIONSHIP BETWEEN FEATURES IS ESTABLISHED BY ORIENTATION OR LOCATION TOLERANCES. SEPARATE POSITION CALLOUTS MAY BE GAGED SEPARATELY REGARDLESS OF DATUM REFERENCES.

CHANGE RESTRICTED
NO MANUAL CHANGES

DO NOT SCALE

METRIC

DIMENSIONS SHOWN IN MILLIMETERS UNLESS OTHERWISE SPECIFIED

REFERENCE
12H (MOLEX AUTOMOTIVE)

| | DATE |
|---|---|
| DRAFTER | 05JN15 |
| APVD1 | |
| APVD2 | |
| APVD3 | |
| APVD4 | |
| APVD5 | |

DRAWING NAME
HARNESS CONN ASM-SEALED 52/66/73/80 CKTS,MX123

DRAWING NUMBER
12672833

| DWG STATUS | | |
|---|---|---|
| ST | REV | PDI |
| R | 001 | |

PAGE NUMBER
1 OF 22

| PAGE | DWG STATUS | | | | | REVISION HISTORY | AUTH | DR | CK | ENG |
|---|---|---|---|---|---|---|---|---|---|---|
| | DATE | ST | REV | CHG | PDI | | | | | |
| | 05JN15 | R | 001 | | | RELEASED TO PRODUCTION AT DLS A | CRMRJE | DFK | | |

| PAGE | DWG STATUS | | | | | REVISION HISTORY | AUTH | DR | CK | ENG |
|---|---|---|---|---|---|---|---|---|---|---|
| | DATE | ST | REV | CHG | PDI | | | | | |

| | | | | | |
|---|---|---|---|---|---|
| | PAGE TITLE: REVISION BLOCK | | DRAWING NUMBER: 12672833 | DWG STATUS: ST R / REV 001 / PDI | PAGE NUMBER: 2 OF 22 |

| HIERARCHY /QUANTITY | DWG ITM | DWG RLTN SHIP | PART NUMBER | P-A ITM | D L S | ST | REV | P D I | N M C I | MASS (KG) | PART NAME | NOTES |
|---|---|---|---|---|---|---|---|---|---|---|---|---|
| | 28 | RD | 12674821 | | A | C | 001 | | | 0.000 | YAZAKI: 7158-3114-90 | 2.8MM CAVITY PLUG |
| | 27 | RD | 12674820 | | A | | 001 | | | 0.000 | PLUG-WRG HARN CONN MX0.64 | |
| | 26 | RD | 12672851 | | A | | 001 | | | 0.000 | TERM-AG 0.5MM/0.75MM ISO,MX64 | |
| | 25 | RD | 12672850 | | A | | 001 | | | 0.000 | TERM-AG 0.35MM ISO,MX64 | |
| | 24 | RD | 12582676 | | A | C | 003 | | | 0.011 | WIRE HARNESS COVER | 52/66/73/80 WAY |
| | 23 | RD | 12672869 | | A | 2 | 001 | | | 0.050 | HARN CONN ASM 80 CKT | KEY J OPTION 9 |
| | 22 | RD | 12672871 | | A | 2 | 001 | | | 0.050 | HARN CONN ASM 80 CKT | KEY H OPTION 9 |
| | 21 | RD | 12672873 | | A | 2 | 001 | | | 0.050 | HARN CONN ASM 80 CKT | KEY G OPTION 9 |
| | 20 | RD | 12672868 | | A | 2 | 001 | | | 0.050 | HARN CONN ASM 80 CKT | KEY J OPTION 0 |
| | 19 | RD | 12672870 | | A | 2 | 001 | | | 0.050 | HARN CONN ASM 80 CKT | KEY H OPTION 0 |
| | 18 | RD | 12672872 | | A | 2 | 001 | | | 0.050 | HARN CONN ASM 80 CKT | KEY G OPTION 0 |
| | 17 | RD | 12672867 | | A | 2 | 001 | | | 0.050 | HARN CONN ASM 73 CKT | KEY F OPTION 9 |
| | 16 | RD | 12672865 | | A | 2 | 001 | | | 0.050 | HARN CONN ASM 73 CKT | KEY C OPTION 9 |
| | 15 | RD | 12672863 | | A | 2 | 001 | | | 0.050 | HARN CONN ASM 73 CKT | KEY B OPTION 9 |
| | 14 | RD | 12672861 | | A | 2 | 001 | | | 0.050 | HARN CONN ASM 73 CKT | KEY A OPTION 9 |
| | 13 | RD | 12672866 | | A | 2 | 001 | | | 0.050 | HARN CONN ASM 73 CKT | KEY F OPTION 0 |
| | 12 | RD | 12672864 | | A | 2 | 001 | | | 0.050 | HARN CONN ASM 73 CKT | KEY C OPTION 0 |
| | 11 | RD | 12672862 | | A | 2 | 001 | | | 0.050 | HARN CONN ASM 73 CKT | KEY B OPTION 0 |
| | 10 | RD | 12672860 | | A | 2 | 001 | | | 0.050 | HARN CONN ASM 73 CKT | KEY A OPTION 0 |
| | 09 | RD | 12672859 | | A | 2 | 001 | | | 0.050 | HARN CONN ASM 66 CKT | KEY C OPTION 9 |
| | 08 | RD | 12672857 | | A | 2 | 001 | | | 0.050 | HARN CONN ASM 66 CKT | KEY A OPTION 9 |
| | 07 | RD | 12672858 | | A | 2 | 001 | | | 0.050 | HARN CONN ASM 66 CKT | KEY C OPTION 0 |
| | 06 | RD | 12672856 | | A | 2 | 001 | | | 0.050 | HARN CONN ASM 66 CKT | KEY A OPTION 0 |
| | 05 | RD | 12672855 | | A | 2 | 001 | | | 0.054 | HARN CONN ASM 52 CKT | KEY C OPTION 9 |
| | 04 | RD | 12672853 | | A | 2 | 001 | | | 0.050 | HARN CONN ASM 52 CKT | KEY A OPTION 9 |
| | 03 | RD | 12672854 | | A | 2 | 001 | | | 0.054 | HARN CONN ASM 52 CKT | KEY C OPTION 0 |
| | 02 | RD | 12672852 | | A | 2 | 001 | | | 0.050 | HARN CONN ASM 52 CKT | KEY A OPTION 0 |
| | 01 | RD | 12672833 | | A | | 001 | | | 8.751 | HARNESS CONN ASM-SEALED 52/66/73/80 CKTS,MX | |
| | | | | | | | | | | | DRAWING | |

PARTS SHOWN ON DRAWING

GM

PAGE TITLE
PART BLOCK

DRAWING NUMBER
12672833

| DWG STATUS | | |
|---|---|---|
| ST | REV | PDI |
| R | 001 | |

# KEY PRODUCT CHARACTERISTICS
# (IN ACCORDANCE WITH QN 1805 OR QN 1050)

▽ SAFETY/COMPLIANCE

◇ FIT/FUNCTION

| TOTAL ON DRAWING | 4 |
|---|---|
| LAST NO. USED | 4 |

| NO | TYPE | DESCRIPTION | RATIONALE | PAGE/ZONE |
|---|---|---|---|---|
| 1 | F/F | 32.68 | IMPROVE CONNECTOR SYSTEM MATING | 16 |
| 2 | F/F | 29.00 | INSURE PROPER RELEASE OF LEVER | 16 |
| 3 | F/F | 15.25 | INSURE FINAL MATE POSITION | 17 |
| 4 | F/F | POSITIONAL TOLERANCE (2 PLACES) | INSURE CONNECTOR SYSTEM MATEABILITY | 20 |

| | | | | | APPLICABLE COMPONENTS | | | | | |
|---|---|---|---|---|---|---|---|---|---|---|
| LINE | MFG. | MFG. P/N | GM P/N | EFFECTIVE DATE | DESCRIPTION | KEY OPTION | WIRE DRESS OPTION | KEY CONFIG. | COLOR | STATUS |
| - | | | | | | | | | | |
| 1 | MOLEX | 34565-0003 | 12582676 | 02JN03 | MX123 DRESS COVER 52/66/73/80 CKT | N/A | N/A | N/A | BLACK | AVAILABLE |
| 2 | MOLEX | 160094-0001 | 12672852 | 01SP13 | MX123 HRNS CONN ASSY 52 CKT | A | 0 | 1458 | BLACK | AVAILABLE |
| 3 | MOLEX | 160094-0003 | 12672854 | 01SP13 | MX123 HRNS CONN ASSY 52 CKT | C | 0 | 2467 | BLUE | AVAILABLE |
| 4 | MOLEX | 160094-0013 | 12672853 | 01SP13 | MX123 HRNS CONN ASSY 52 CKT | A | 9 | 1458 | BLACK | AVAILABLE |
| 5 | MOLEX | 160094-0015 | 12672855 | 01SP13 | MX123 HRNS CONN ASSY 52 CKT | C | 9 | 2467 | BLUE | AVAILABLE |
| 6 | MOLEX | 34822-0013 | 12672856 | 01SP13 | MX123 HRNS CONN ASSY 66 CKT | A | 0 | 1458 | BLACK | AVAILABLE |
| 7 | MOLEX | 34822-0033 | 12672858 | 01SP13 | MX123 HRNS CONN ASSY 66 CKT | C | 0 | 2467 | BLUE | AVAILABLE |
| 8 | MOLEX | 34822-0023 | 12672857 | 01SP13 | MX123 HRNS CONN ASSY 66 CKT | A | 9 | 1458 | BLACK | AVAILABLE |
| 9 | MOLEX | 34822-0043 | 12672859 | 01SP13 | MX123 HRNS CONN ASSY 66 CKT | C | 9 | 2467 | BLUE | AVAILABLE |
| 10 | MOLEX | 34566-0103 | 12672860 | 11JN04 | MX123 HRNS CONN ASSY 73 CKT | A | 0 | 1458 | BLACK | AVAILABLE |
| 11 | MOLEX | 34566-0203 | 12672862 | 11JN04 | MX123 HRNS CONN ASSY 73 CKT | B | 0 | 1468 | ST GRAY | AVAILABLE |
| 12 | MOLEX | 34566-0303 | 12672864 | 09AP08 | MX123 HRNS CONN ASSY 73 CKT | C | 0 | 2467 | BLUE | AVAILABLE |
| 13 | MOLEX | 34566-0603 | 12672866 | 05DC14 | MX123 HRNS CONN ASSY 73 CKT | F | 0 | 1357 | NATURAL | AVAILABLE |
| 14 | MOLEX | 34566-1303 | 12672861 | 11JN04 | MX123 HRNS CONN ASSY 73 CKT | A | 9 | 1458 | BLACK | AVAILABLE |
| 15 | MOLEX | 34566-1403 | 12672863 | 11JN04 | MX123 HRNS CONN ASSY 73 CKT | B | 9 | 1468 | ST GRAY | AVAILABLE |
| 16 | MOLEX | 34566-1503 | 12672865 | 09AP08 | MX123 HRNS CONN ASSY 73 CKT | C | 9 | 2467 | BLUE | AVAILABLE |
| 17 | MOLEX | 34566-1803 | 12672867 | 05DC14 | MX123 HRNS CONN ASSY 73 CKT | F | 9 | 1357 | NATURAL | AVAILABLE |
| 18 | MOLEX | 34566-0703 | 12672872 | 09AP08 | MX123 HRNS CONN ASSY 80 CKT | G | 0 | 1358 | BLUE | AVAILABLE |
| 19 | MOLEX | 34566-0803 | 12672870 | 11JN04 | MX123 HRNS CONN ASSY 80 CKT | H | 0 | 2458 | ST GRAY | AVAILABLE |
| 20 | MOLEX | 34566-0903 | 12672868 | T.B.D | MX123 HRNS CONN ASSY 80 CKT | J | 0 | 2457 | BLACK | NOT ACTIVE |
| 21 | MOLEX | 34566-1903 | 12672873 | 09AP08 | MX123 HRNS CONN ASSY 80 CKT | G | 9 | 1358 | BLUE | AVAILABLE |
| 22 | MOLEX | 34566-2003 | 12672871 | 11JN04 | MX123 HRNS CONN ASSY 80 CKT | H | 9 | 2458 | ST GRAY | AVAILABLE |
| 23 | MOLEX | 34566-2103 | 12672869 | T.B.D | MX123 HRNS CONN ASSY 80 CKT | J | 9 | 2457 | BLACK | NOT ACTIVE |
| 24 | MOLEX | 34736-0028 | 12672851 | 01AU10 | MX64 RCPT TERM Ag 0.5mm/0.75mm ISO GAGE B (RIGHT PAYOFF) | N/A | N/A | N/A | N/A | AVAILABLE |
| 25 | MOLEX | 34736-0026 | 12672850 | 01AU10 | MX64 RCPT TERM Ag 0.35mm ISO GAGE B (RIGHT PAYOFF) | N/A | N/A | N/A | N/A | AVAILABLE |
| 26 | MOLEX | 34586-0001 | 12674820 | 11JN04 | MX123 0.64mm GROMMET PLUG | N/A | N/A | N/A | NATURAL | AVAILABLE |
| 27 | YAZAKI | 7116-4150-02 | 12588066 | 02JN03 | 2.8mm YESC SEALED FEMALE TERMINAL TIN 0.35mm2-0.50mm2 | N/A | N/A | N/A | N/A | NOT ACTIVE |
| 28 | YAZAKI | 7116-4151-02 | 12588067 | 02JN03 | 2.8mm YESC SEALED FEMALE TERMINAL TIN 0.75mm2-1.0mm2 | N/A | N/A | N/A | N/A | NOT ACTIVE |
| 29 | YAZAKI | 7116-4152-02 | 12582685 | 02JN03 | 2.8mm YESC SEALED FEMALE TERMINAL TIN 1.5mm2-2.5mm2 | N/A | N/A | N/A | N/A | AVAILABLE |
| 30 | YAZAKI | 7158-3111-60 | 12588068 | 02JN03 | 2.8mm CABLE SEAL (wire O.D. range 1.2mm-1.9mm) | N/A | N/A | N/A | GREEN | NOT ACTIVE |
| 31 | YAZAKI | 7158-3112-70 | 12588069 | 02JN03 | 2.8mm CABLE SEAL (wire O.D. range 1.8mm-2.3mm) | N/A | N/A | N/A | YELLOW | NOT ACTIVE |
| 32 | YAZAKI | 7158-3113-40 | 12582686 | 02JN03 | 2.8mm CABLE SEAL (wire O.D. range 2.1mm-3.0mm) | N/A | N/A | N/A | WHITE | AVAILABLE |
| 33 | YAZAKI | 7158-3114-90 | 12674821 | 02JN03 | 2.8mm YESC CAVITY PLUG | N/A | N/A | N/A | BLUE | AVAILABLE |
| 34 | MOLEX | 63825-8400 | N/A | 02JN03 | MX64 TERM HAND CRIMP TOOL | N/A | N/A | N/A | N/A | AVAILABLE |
| 35 | MOLEX | 63813-1400 | XX019826 | 02JN03 | MX64 TERM SERVICE TOOL | N/A | N/A | N/A | N/A | AVAILABLE |
| 36 | MOLEX | 63902-5300 | N/A | 02JN03 | MX64 CRIMP APPLICATOR with TOOL KIT 0.5/0.75mm2 PAYOFF DIRECTION D (left payoff) (contact Molex for payoff detail) | N/A | N/A | N/A | N/A | AVAILABLE |
| 37 | MOLEX | 63902-5370 | N/A | 02JN03 | MX64 APPLICATOR TOOL KIT 0.5/0.75mm2 | N/A | N/A | N/A | N/A | AVAILABLE |
| 38 | MOLEX | 63902-5100 | N/A | 02JN03 | MX64 CRIMP APPLICATOR with TOOL KIT 0.35mm2 PAYOFF DIRECTION D (left payoff) (contact Molex for payoff detail) | N/A | N/A | N/A | N/A | AVAILABLE |
| 39 | MOLEX | 63902-5170 | N/A | 02JN03 | MX64 APPLICATOR TOOL KIT 0.35mm2 | N/A | N/A | N/A | N/A | AVAILABLE |
| 40 | SPX | J35616-64 | T.B.D. | 02JN03 | 0.64mm PROBE TOOL (for rcpt) | N/A | N/A | N/A | N/A | AVAILABLE |
| 41 | SPX | J35616-64A | T.B.D. | 02JN03 | 0.64mm PROBE TOOL WITH EXT (for rcpt) | N/A | N/A | N/A | N/A | AVAILABLE |
| 42 | SPX | J35616-65 | T.B.D. | 02JN03 | 0.64mm PROBE TOOL WITH EXT (for pin) | N/A | N/A | N/A | N/A | AVAILABLE |
| 43 | SPX | J35616-4A | T.B.D. | 02JN03 | 2.8mm PROBE TOOL (for rcpt) | N/A | N/A | N/A | N/A | AVAILABLE |
| 44 | YAZAKI | X39899-J374 | 12094430 | 02JN03 | 2.8mm TERM SERVICE TOOL | N/A | N/A | N/A | N/A | AVAILABLE |
| 45 | TQI | 7000-1006 | N/A | 15JN15 | 52 CKT PASS THROUGH ADAPTERS | N/A | N/A | N/A | BLACK | AVAILABLE |
| 46 | TQI | 7000-1002 | N/A | 15JN15 | 66 CKT PASS THROUGH ADAPTERS | N/A | N/A | N/A | BLACK | AVAILABLE |
| 47 | TQI | 79917-0061 | N/A | 15JN15 | 73 CKT PASS THROUGH ADAPTERS | N/A | N/A | N/A | BLACK | AVAILABLE |
| 48 | TQI | 79917-0066 | N/A | 15JN15 | 80 CKT PASS THROUGH ADAPTERS | N/A | N/A | N/A | BLACK | AVAILABLE |

* - MX123 DRESS COVER 52/66/73/80 CKT MATES TO ANY MX123 HARN CONN ASSY SHOWN ON TABLE ABOVE

# NOTES: UNLESS OTHERWISE SPECIFIED

1. MATERIAL FOR INTERFACE:

A. RESIN:
   1. 30% G.F. PBT; 20% MAX. (BY WEIGHT) REGRIND.
   2. MATING CONNECTOR INTERFACE PART COLOR MUST BE SAME AS MATCHING KEYED HARNESS CONNECTOR ASSEMBLY.
   3. MUST BE VALIDATED FOR INDIVIDUAL DEVICE APPLICATION REQUIREMENTS.

B. 0.64MM PINS:
   1. BASE MATERIAL: COPPER ALLOY; CONDUCTIVITY >= 28% IACS AT 20°C; TENSILE STRENGTH >= 635 N/mm²;SURFACE ROUGHNESS $R_a$ 6 MAX.
   2. PLATING FINISH: SILVER (Ag). PLATING TO BE 1.9-3.3 um ELECTRODEPOSITED SEMI-BRIGHT SILVER OVER 1.25-2.25 um DUCTILE SULPHAMATE NICKEL PER NOTE 1(D).
   3. ANTI-TARNISH: SYNTHETIC HYDROCARBON CONTACT SURFACE FINISH OR EQUIVALENT APPLIED WITHOUT VOID TO CONTACT AREA (MIN 3.7mm FROM PIN TIP).

C. 2.8MM BLADE:
   1. BASE MATERIAL: COPPER ALLOY; CONDUCTIVITY>= 28% IACS AT 20°C; TENSILE STRENGTH >= 350 N/mm²; SURFACE ROUGHNESS $R_a$ 6 MAX.
   2. PLATING FINISH: TIN. PLATING TO BE 2.5-5.0 um ELECTRODEPOSITED TIN, MATTE FINISH OVER 1.25-2.5um DUCTILE SULPHAMATE NICKEL PER NOTE 1(D).

D. PLATING REQUIREMENTS:

1. SILVER PLATING
   a. 99.5% PURE SEMI-BRIGHT WITH NO ORGANIC BRIGHTNERS OR CHROMATES.

2. NICKEL PLATING
   a. ELECTRODEPOSITED DUCTILE SULFAMATE NICKEL WITH A NON-BRIGHTENED FINISH. NO ORGANIC OR BRIGHTENING AGENTS SHALL BE ALLOWED.
   b. SHALL ONLY BE USED AS AN UNDERLYING PLATING AND MAY NOT BE USED AS AN ELECTRICAL CONTACT SURFACE PLATING.
   c. SHALL BE NODULE FREE WHEN VIEWED AT 10X MAGNIFICATION IN MEASURED IN CONTACT SURFACE AREA PLUS 0.5MM PERIMETER AROUND THE CONTACT SURFACE AREA.
   d. ALL PLATINGS SHALL HAVE A 1.0% MAXIMUM BY WEIGHT IMPURITIES. IMPURITIES ARE DEFINED AS ALL ELEMENTS NOT THE PRIMARY PLATING OR HARDENING AGENT IF APPLICABLE, AS DETERMINED BY WET CHEMICAL ANALYSIS OR AUGER METHOD. NO SINGLE IMPURITY SHALL EXCEED 0.1% MAXIMUM BY WEIGHT.

3. TESTING
   a. THICKNESS TO BE MEASURED IN CONTACT SURFACE AREA PLUS 0.5MM PERIMETER AROUND THE CONTACT SURFACE AREA AS DESIGNATED IN THE DRAWING. THICKNESS SHALL BE DETERMINED BY METHOD OF X-RAY (XRF).
   b. PLATING ADHESION SHALL BE TESTED BY A BEND TEST FOR ALL METALS. THE TEST SAMPLE SHALL BE BENT 90 DEGREES TO DETERMINE DEPOSIT ADHESION. TESTING SHALL BE COMPLETED IN ACCORDANCE WITH ASTM SPEC B571.

2. DESIGN - GENERAL:

A. THIS IS A 100% CAD GENERATED PART. THE CAD MATHEMATICAL DATA IS THE MASTER FOR THIS PART. FOR DIMENSIONAL OR ANY INFORMATION NOT SHOWN ON THIS DRAWING, ANALYZE THE CAD MODEL.
B. TOLERANCES:
   1. LINEAR  0.X ± 0.30
              0.XX ± 0.10
              0.XXX ± 0.10
   2. ANGULAR X° ± 3°
   3. ⌓ | 1.0 | A | B | C
C. MINIMUM WALL THICKNESS REQUIRED: 1.3mm.
D. CORNERS SHOWN AS SHARP TO BE R 0.2 MAX.
E. LETTERING SHALL BE 0.15 MAX RAISED IN 0.20 MAX RECESS PAD. THIS INCLUDES MATERIAL CODE, RECYCLING CODE, CAVITY ID AND DATE CODE.
F-1. PARTS MUST BE FREE OF DISCOLORATION, SALT RESIDUE AND OTHER IMPERFECTIONS THAT AFFECT FIT OR FUNCTION.
F-2. SCRATCHES OR DENTS NOT TO EXCEED 0.013mm IN DEPTH.
G. FOLLOWING PRODUCTION CODES TO BE PERMANENTLY MARKED & HUMAN READABLE TO A LETTER HEIGHT OF 1.5 ±0.5MM X 0.3 MAX DEEP
   1. MATERIAL #: XXXXX-XXXX
   2. DATE CODE: JJJY (JULIAN DAY, LAST DIGIT OF YEAR)
   3. INSPECTION MACHINE CODE + SERIAL #: X_XXXXX

3. DESIGN - MANUFACTURING:

A. DRAFT TO BE WITHIN TOLERANCE.
B. ALLOWABLE FLASH MAX 0.2 HIGH X MAX 0.13 THICK.
C. ALLOWABLE PARTING LINE MISMATCH 0.2 MAX.
D. EJECTOR PINS MARK TO BE FLUSH TO 0.25 MAX DEPRESSED.
E. ALLOWABLE GATE VESTIGE FLUSH TO 0.25 MAX PROTRUSION.
F. NO EXTERNAL MOLD RELEASE AGENT ALLOWED DURING MANUFACTURING.
G. STEEL THAT FORMS THE INDICATED SURFACE MUST BE POLISHED WITH A DIAMOND FINISH (SPI A-2) OVER THE FULL PERIPHERY OF THE TOOL. SURFACE MUST HAVE NO MISMATCH.
H. ANY PROCESS LUBRICANT REMAINING ON THE TERMINAL MUST NOT VARNISH OR DEGRADE IT'S ELECTRICAL PERFORMANCE UP TO A MAXIMUM CLASS AMBIENT TEMPERATURE PER SAE USCAR-2 FOR 1008 HOURS. PROCESS LUBRICANTS SHOULD BE APPROVED BY THE RESPONSIBLE ENGINEER.
J. OPTIONAL FEATURES PROVIDED FOR AUTOMATION.
K. PART MUST BE FREE FROM BURRS AND SHARP EDGES, WHICH MIGHT BE DETRIMENTAL TO SATISFACTORY ASSEMBLY, SAFE HANDLING OR FUNCTION OF PART.
L. PARTS AS DELIVERED TO ASSEMBLY SHALL BE CLEAN AND FREE OF DEBRIS, RESIDUAL ABRASIVE MATERIAL AND CORROSION PRODUCTS ADVERESLY AFFECTING FUNCTION OR APPEARENCE.
M. RESTRICTED AND REPORTABLE SUBSTANCES FOR PARTS PER GMW3059.

# NOTES: UNLESS OTHERWISE SPECIFIED

4. SYSTEM REQUIREMENTS:

   A. HARNESS CONNECTOR IS COMPATIBLE WITH THE FOLLOWING ISO WIRE SIZE NO'S:
      0.35mm2, MEETING GMW15626 - MIN OD OF 1.30MM
      0.50mm2, MEETING GMW15626
      0.75mm2, MEETING GMW15626 - MAX OD OF 2.06MM

   B. CABLE TIE SPECIFICATIONS:
      1. CABLE TIE:
         TENSILE RATING: 220N / (50lbs) MIN
         TIE LENGTH: 186mm MIN
         TIE WIDTH: 4.75mm MAX
         MATERIAL: NYLON
      2. INSTALLATION:
         CABLE TIE TENSION: 190N MIN
      3. DRESSED WIRE BUNDLE PACKAGING: SEE FIG. 1

   C. WHEN MATED WITH COMPONENT CONNECTOR INTERFACE AND/OR DRESS COVER, HARNESS CONNECTOR SYSTEM CONFORMS TO THE FOLLOWING:
      1. SAE/USCAR-2, REV: 3 APRIL, 2001; CLASS 3
      2. FIELD CORRELATED LIFE TEST, SAE/USCAR-20, NOV. 2001
      3. GMW #3191 AUGUST 22, 2000 (DRAFT); TEMPERATURE CLASS 3, SEALING CLASS 1, VIBRATION CLASS 2
      4. RESTRICTED AND REPORTABLE CHEMICALS PER GMW #3059, REV: D AUGUST 2002
      5. TPA USER FORCES (FULLY POPULATED WITH TERMINALS)
         a. REMOVAL FROM LOCK TO PRE-SET: <=120N

   D. WIRE SPECIFICATIONS:
      1. WIRE SURFACE MUST BE FREE OF SCRATCHES, GROOVES OR DENTS WHERE FUNCTIONAL

5. TERMINAL CURRENT RATINGS:

   A. MX64 RCPT TERM
      ALL TESTING DONE IN ACCORDANCE WITH USCAR-2 REV5 SECTION 5.3

      1. MX64 RCPT TERM Ag 0.50/0.75mm2 CRIMPED TO 0.75mm2 ISO WIRE AND MATED TO MX123 0.64MM PIN: SEE TABLE BELOW
      2. MX64 RCPT TERM Ag 0.35mm2 CRIMPED TO 0.35mm2 ISO WIRE AND MATED TO MX123 0.64MM PIN: SEE TABLE BELOW

| WIRE | CURRENT RATING | | | |
|---|---|---|---|---|
| | 23'C | 85'C | 105'C | 125'C |
| 0.75mm2 | 11.3A | 11.3A | 9.5A | 6.6A |
| 0.50mm2 | 10.0A | 10.0A | 8.3A | 5.7A |
| 0.35mm2 | 8.5A | 8.5A | 7.1A | 5.0A |

   B. 2.8MM RCPT TERM
      ALL TESTING DONE IN ACCORDANCE WITH MOLEX DVP&R 0279 (TR # 7125)

      1. 2.8MM RCPT TERM TIN 2.0mm2 CRIMPED TO 2.0mm2 ISO WIRE AND MATED TO MX123 2.8MM BLADE: 25.6 AMPS AT 125° C

6. CONTACT MOLEX AUTOMOTIVE FOR AVAILABLE CUSTOM PATTERNS OF CAVITIES OPEN FOR CIRCUITS - SEE GM DRAWING 13507496

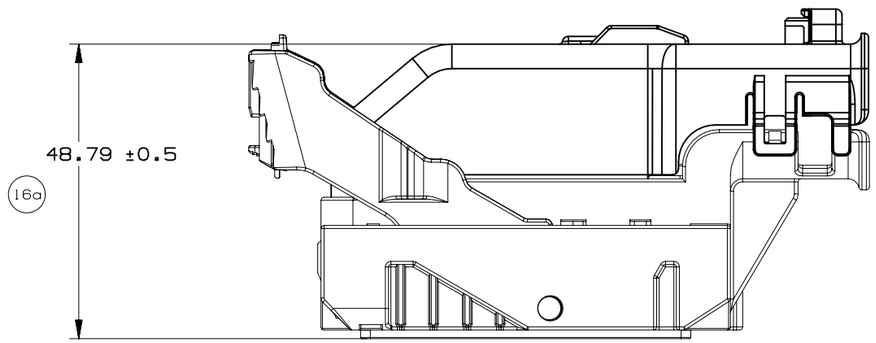


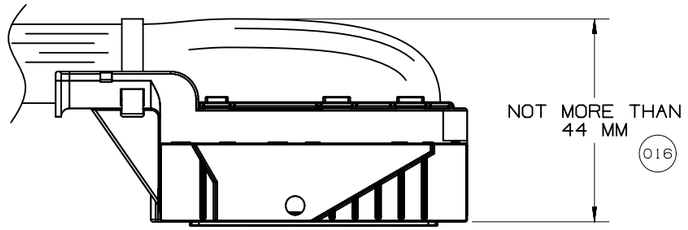


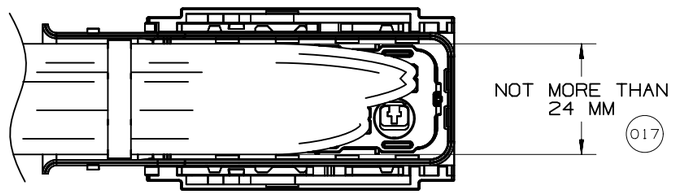


Fig. 1

| | | | | | | | | |
|---|---|---|---|---|---|---|---|---|
| | GM | PAGE TITLE<br>WIRE DRESS PACKAGING DIMENSIONS | | DRAWING NUMBER<br>12672833 | DWG STATUS<br>ST: R | REV: 001 | PDI: | PAGE NUMBER<br>8 OF 22 |

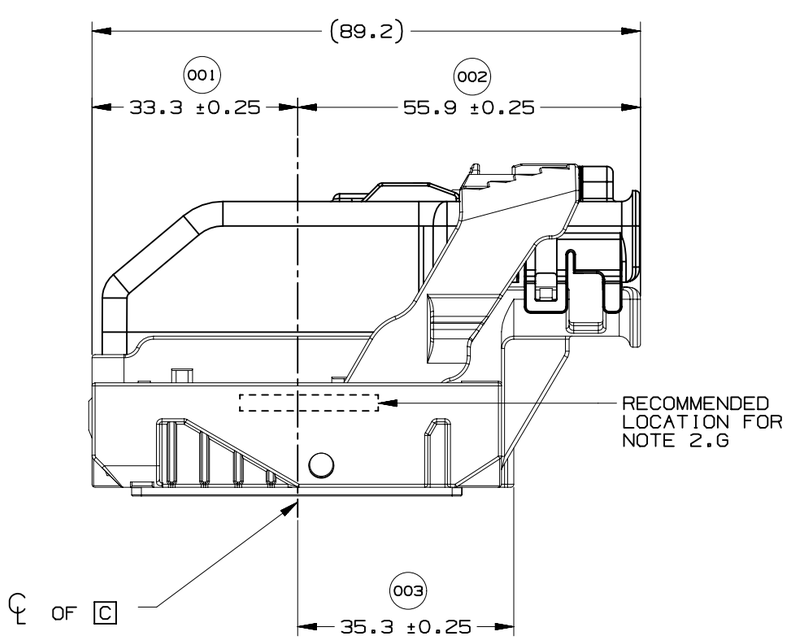


WIRE DRESS OPTION 0 SHOWN

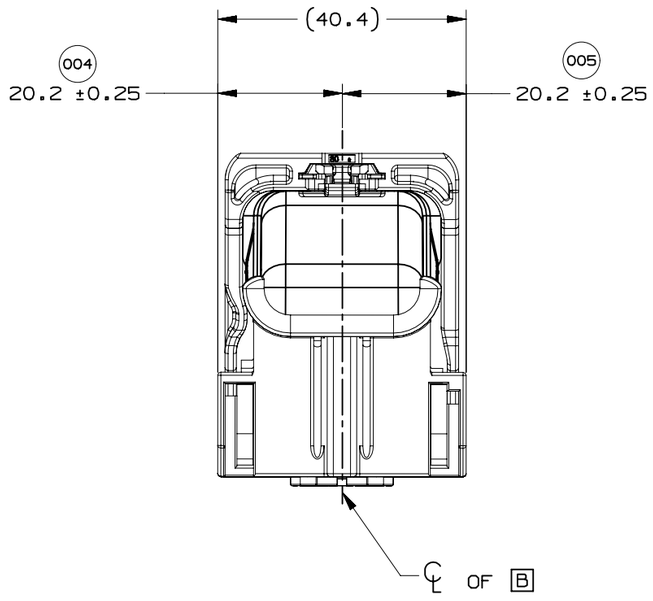


WIRE DRESS OPTION 0 SHOWN

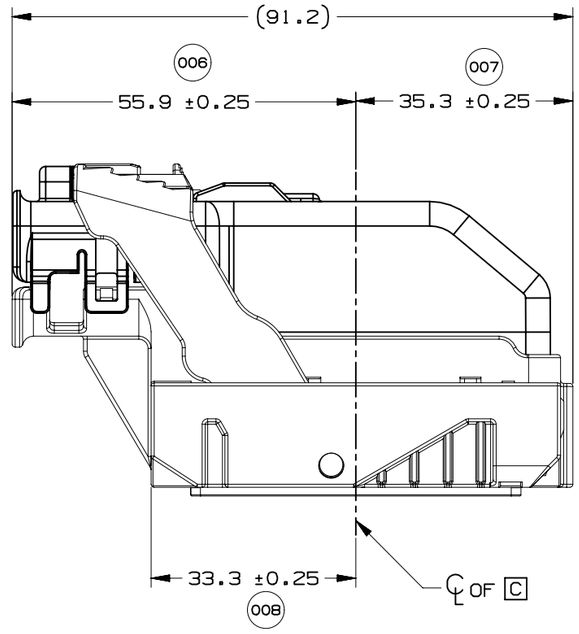


WIRE DRESS OPTION 9 SHOWN

| | | | | | | | |
|---|---|---|---|---|---|---|---|
| | GM | PAGE TITLE<br>LOCATION AND PACKAGING DIMENSIONS<br>REFERENCING INTERFACE DATUMS B & C | | DRAWING NUMBER<br>12672833 | DWG STATUS<br>ST: R / REV: 001 / PDI: | | PAGE NUMBER<br>9 OF 22 |

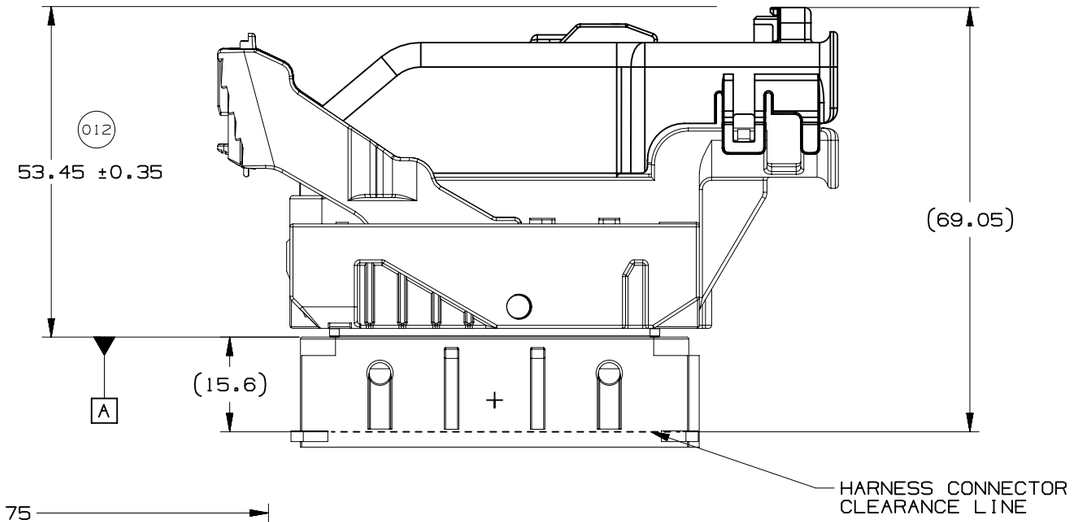


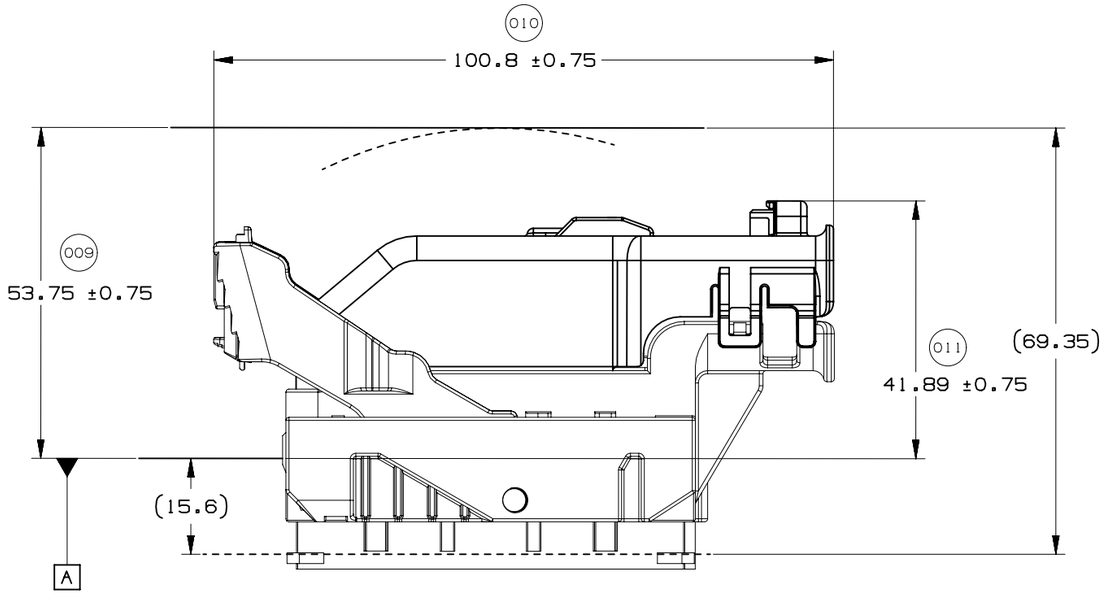


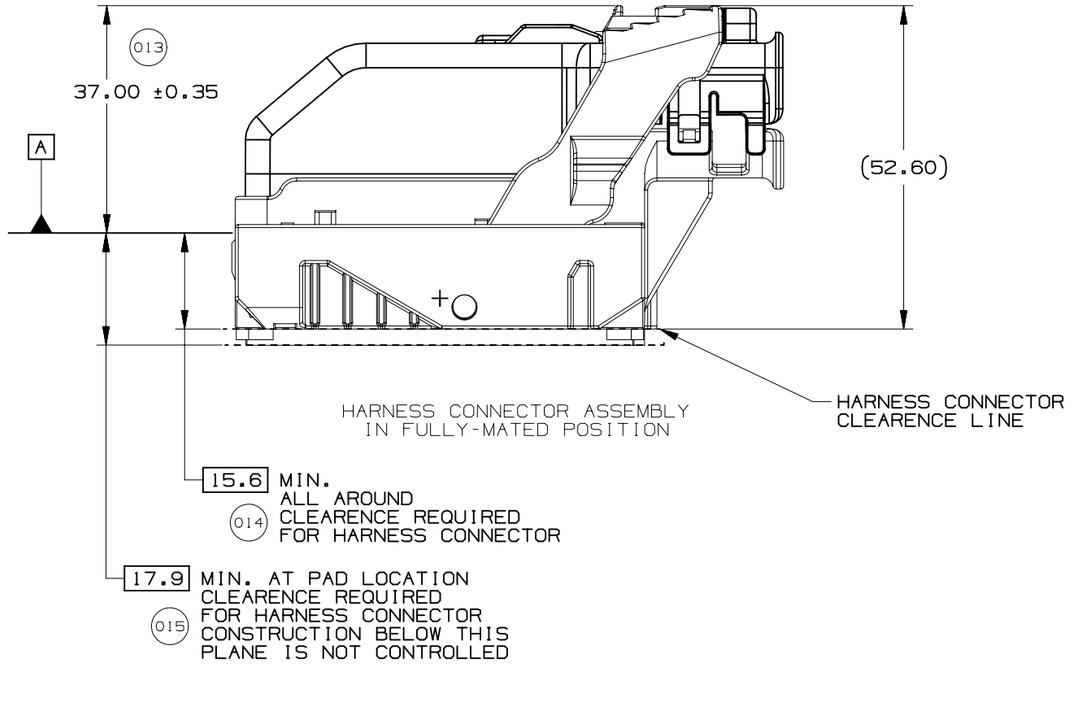


| | | | | | | |
|---|---|---|---|---|---|---|
| | GM | PAGE TITLE<br>LOCATION AND PACKAGING DIMENSIONS<br>REFERENCING INTERFACE DATUM A | | DRAWING NUMBER<br>12672833 | DWG STATUS<br>ST: R / REV: 001 / PDI: | PAGE NUMBER<br>10 OF 22 |

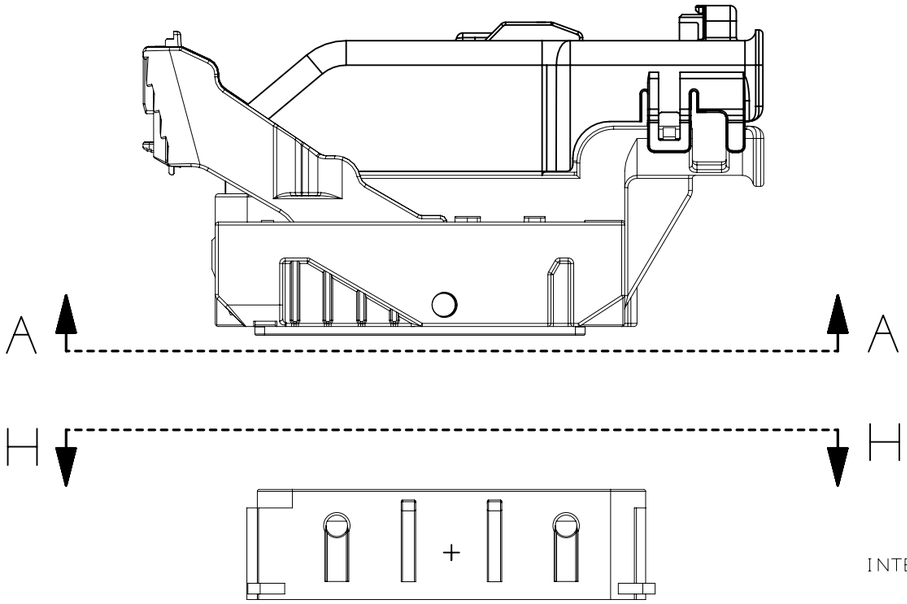


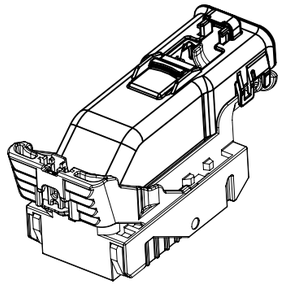

NOTE: REFERENCE THE COMPONENT TABLE
FOR KEY OPTIONS AND CONFIGURATIONS

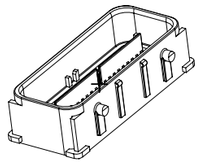

INTERFACE SIDE SHOWN ON ALL SECTION VIEWS

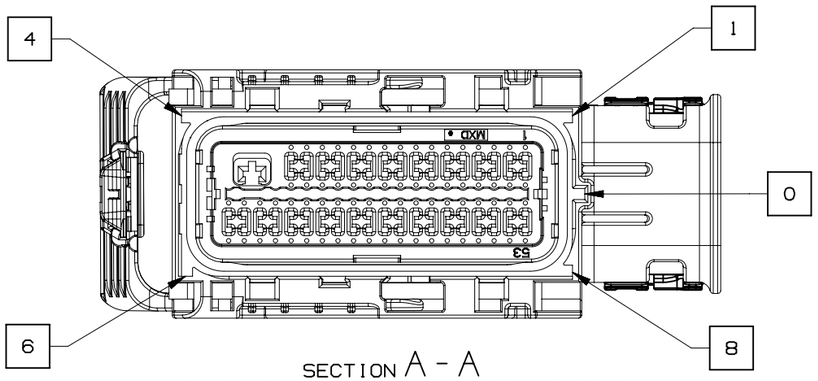


SECTION A - A
73 CKT HARNESS CONNECTOR ASSEMBLY
KEY OPTION B SHOWN

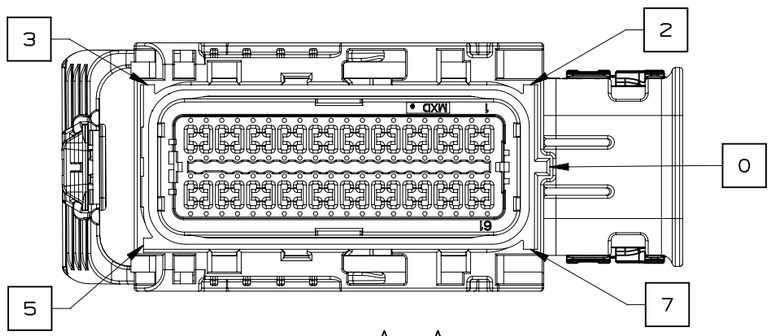


SECTION A - A
80 CKT HARNESS CONNECTOR ASSEMBLY
KEY OPTION K SHOWN

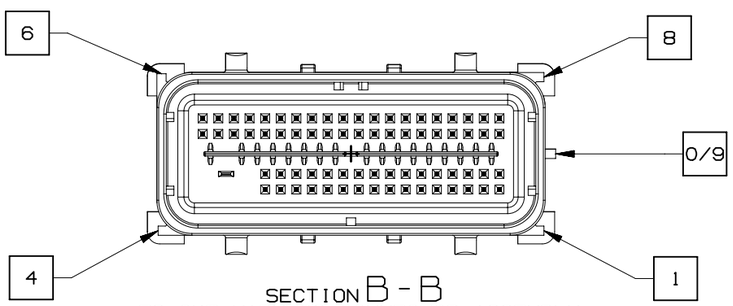


SECTION B - B
73 CKT HARNESS CONNECTOR ASSEMBLY
KEY OPTION B SHOWN

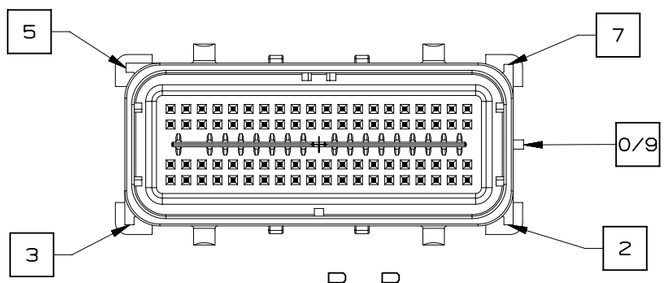


SECTION B - B
80 CKT HARNESS CONNECTOR ASSEMBLY
KEY OPTION K SHOWN

| | | | | | | | |
|---|---|---|---|---|---|---|---|
| | GM | PAGE TITLE: KEY ID REF - WIRE DRESS OPTION 0 | | DRAWING NUMBER: 12672833 | DWG STATUS | | PAGE NUMBER |
| | | | | | ST: R | REV: 001 | PDI: | 11 OF 22 |

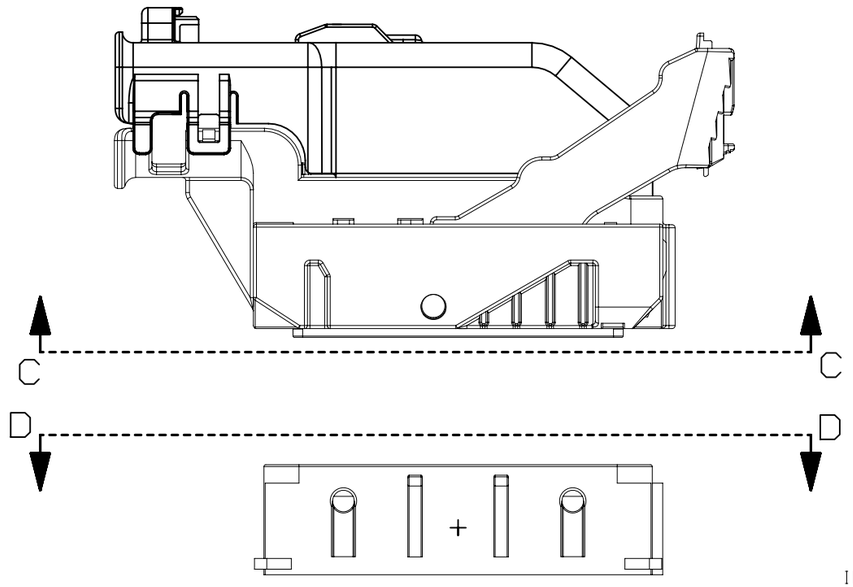


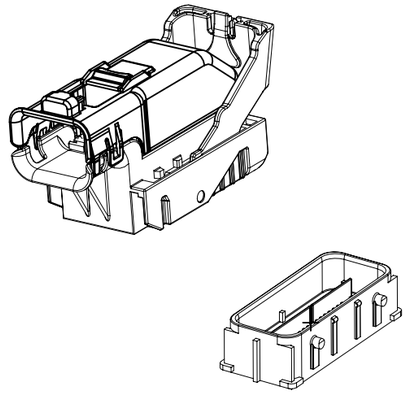

NOTE: REFERENCE THE COMPONENT TABLE
FOR KEY OPTIONS AND CONFIGURATIONS

INTERFACE SIDE SHOWN ON ALL SECTION VIEWS

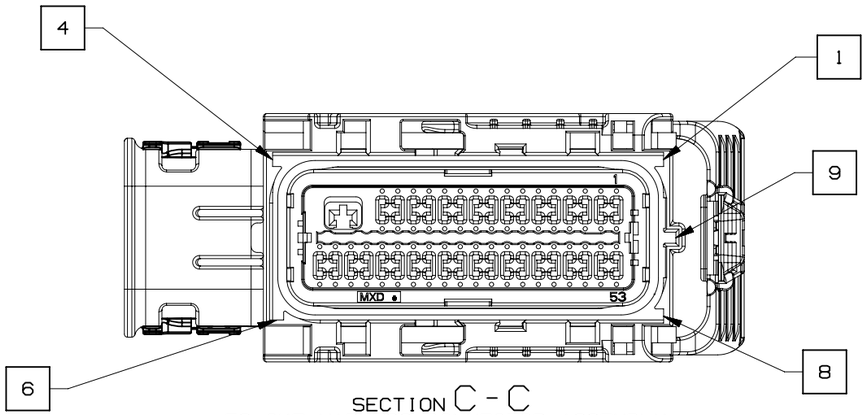


SECTION C - C
73 CKT HARNESS CONNECTOR ASSEMBLY
KEY OPTION B SHOWN

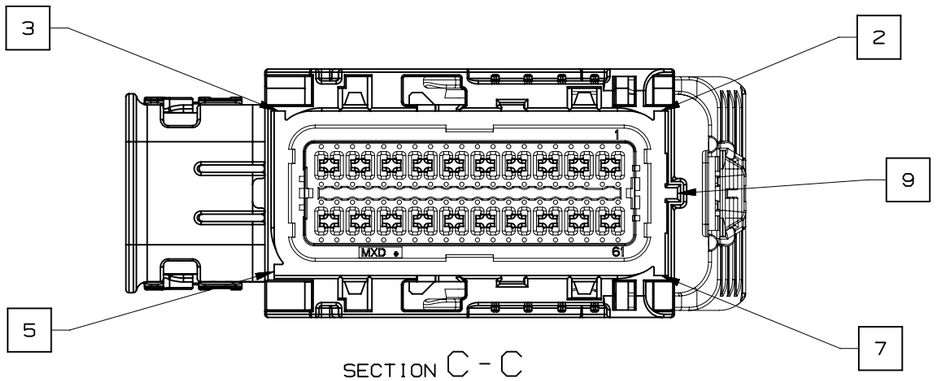


SECTION C - C
80 CKT HARNESS CONNECTOR ASSEMBLY
KEY OPTION K SHOWN

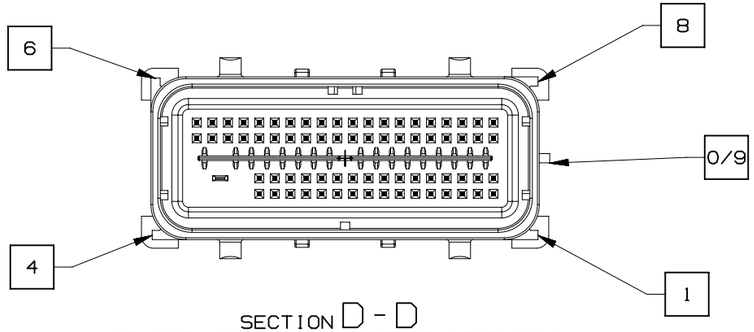


SECTION D - D
73 CKT HARNESS CONNECTOR ASSEMBLY
KEY OPTION B SHOWN

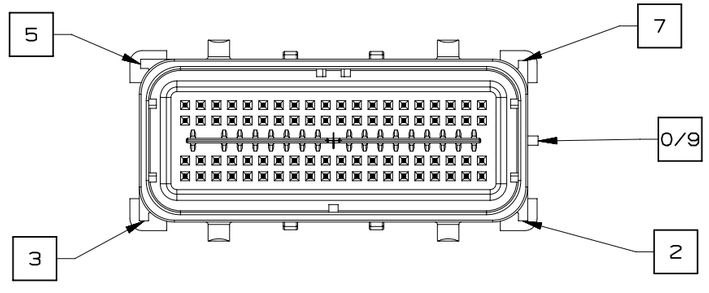


SECTION D - D
80 CKT HARNESS CONNECTOR ASSEMBLY
KEY OPTION K SHOWN

| | | | | | | |
|---|---|---|---|---|---|---|
| | GM | PAGE TITLE: KEY ID REF - WIRE DRESS OPTION 9 | | DRAWING NUMBER: 12672833 | DWG STATUS: ST R / REV 001 / PDI | PAGE NUMBER: 12 OF 22 |

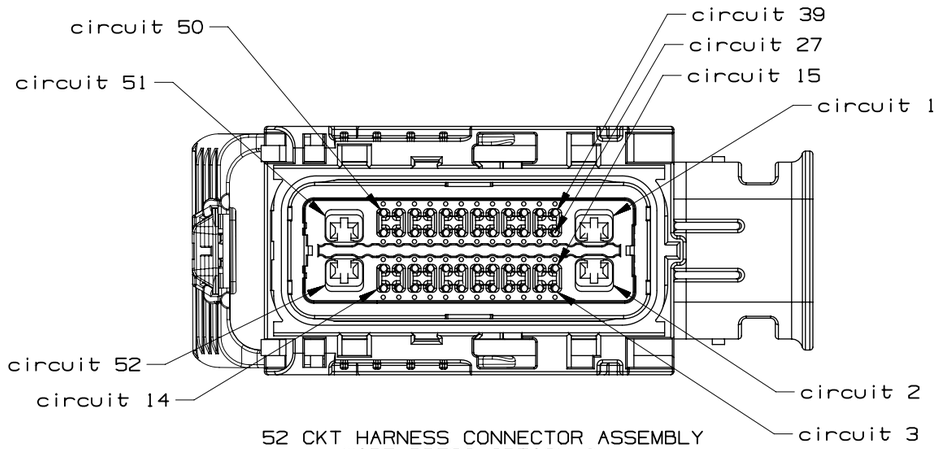


52 CKT HARNESS CONNECTOR ASSEMBLY
WIRE DRESS OPTION 0

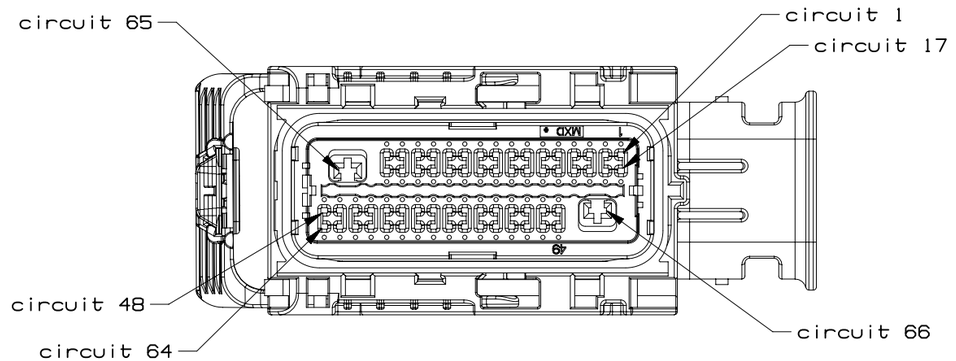


66 CKT HARNESS CONNECTOR ASSEMBLY
WIRE DRESS OPTION 0

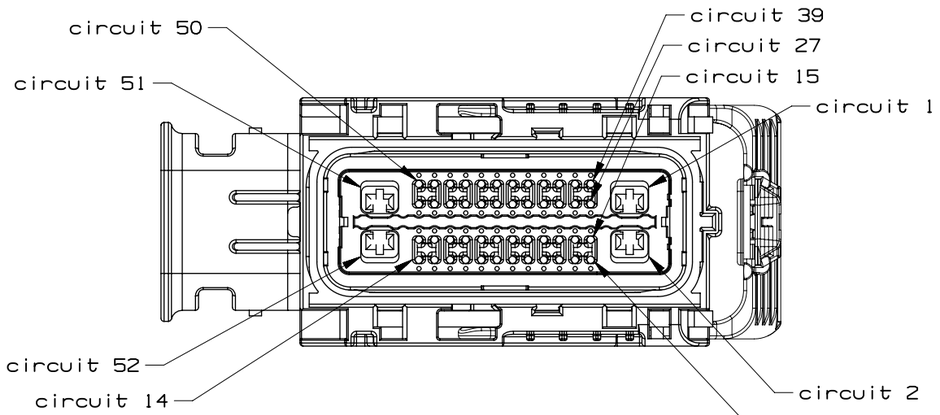


52 CKT HARNESS CONNECTOR ASSEMBLY
WIRE DRESS OPTION 9

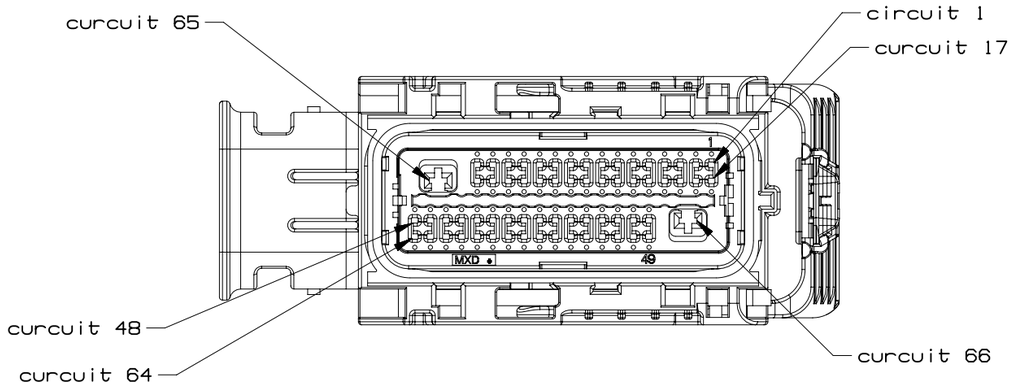


66 CKT HARNESS CONNECTOR ASSEMBLY
WIRE DRESS OPTION 9

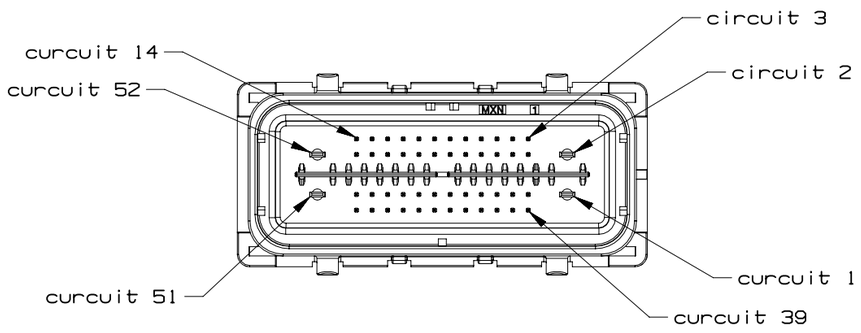


52 CKT COMPONENT CONNECTOR INTERFACE

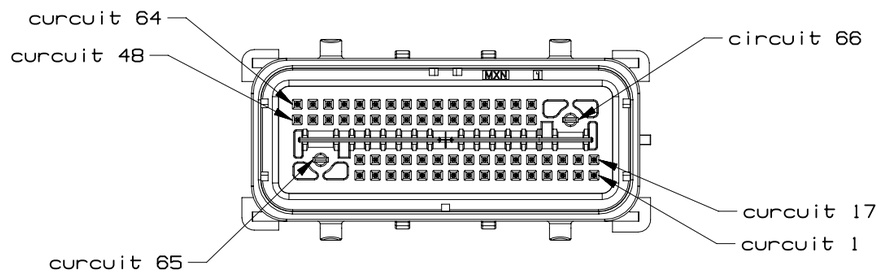


66 CKT COMPONENT CONNECTOR INTERFACE

| | | | | | | | |
|---|---|---|---|---|---|---|---|
| | GM | PAGE TITLE<br>CIRCUIT CONFIGURATIONS | | DRAWING NUMBER<br>12672833 | DWG STATUS<br>ST: R / REV: 001 / PDI: | | PAGE NUMBER<br>13 OF 22 |

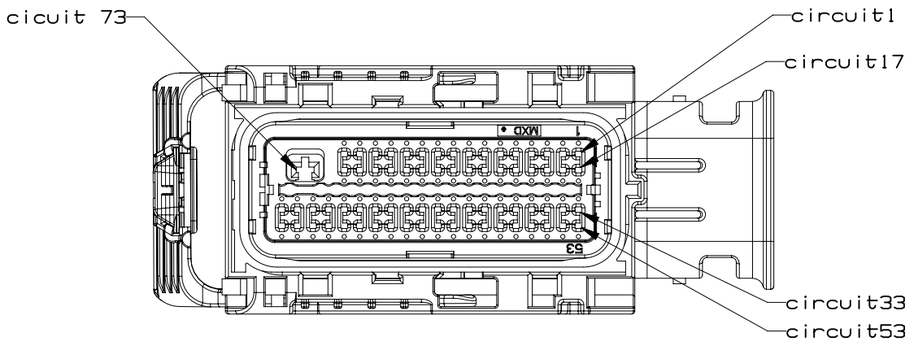


73 CKT HARNESS CONNECTOR ASSEMBLY
WIRE DRESS OPTION 0

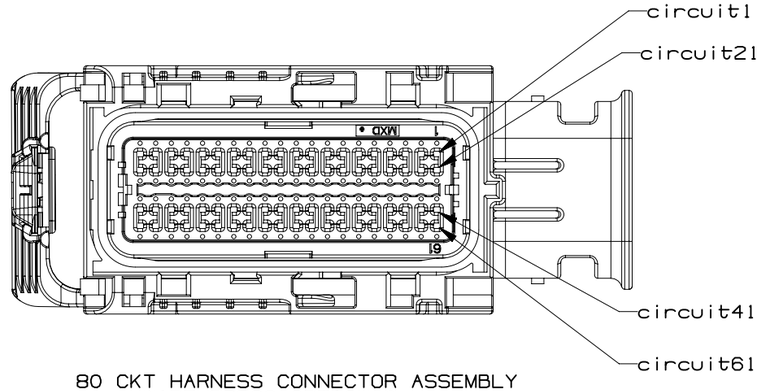


80 CKT HARNESS CONNECTOR ASSEMBLY
WIRE DRESS OPTION 0

INTERFACE SIDE SHOWN ON ALL VIEWS

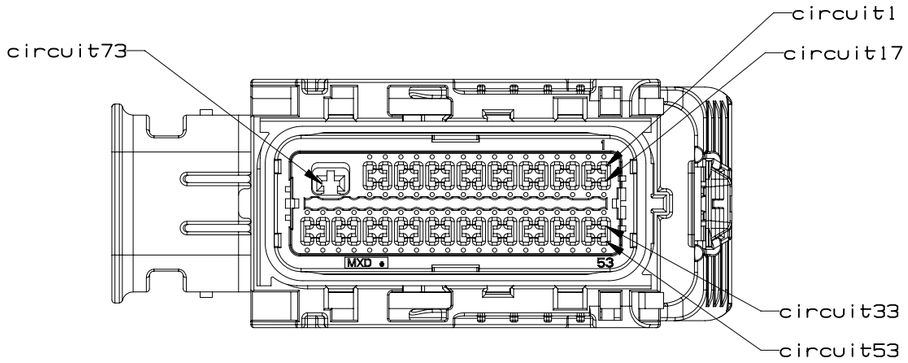


73 CKT HARNESS CONNECTOR ASSEMBLY
WIRE DRESS OPTION 9

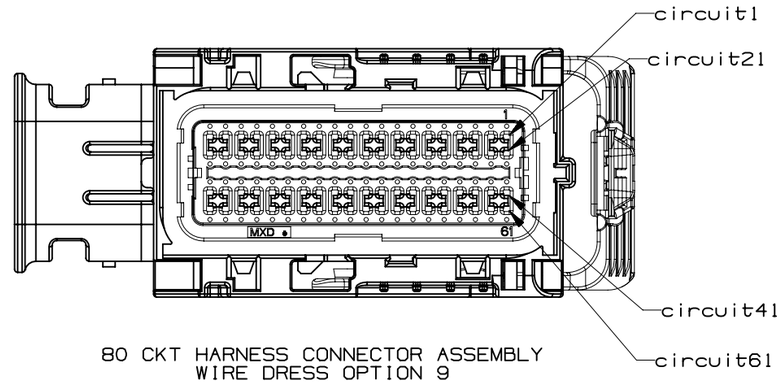


80 CKT HARNESS CONNECTOR ASSEMBLY
WIRE DRESS OPTION 9

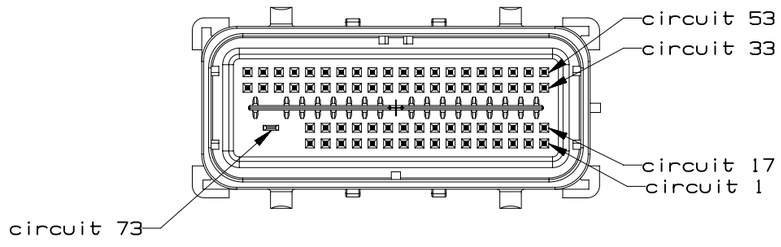


73 CKT COMPONENT CONNECTOR INTERFACE

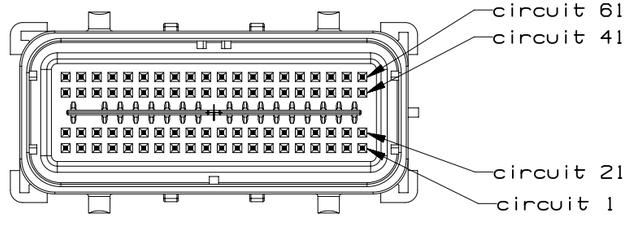


80 CKT COMPONENT CONNECTOR INTERFACE

| | | | | | | | |
|---|---|---|---|---|---|---|---|
| | GM | PAGE TITLE: CIRCUIT CONFIGURATIONS | | DRAWING NUMBER: 12672833 | DWG STATUS: ST R | REV 001 | PDI | PAGE NUMBER: 14 OF 22 |

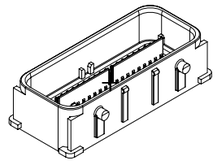

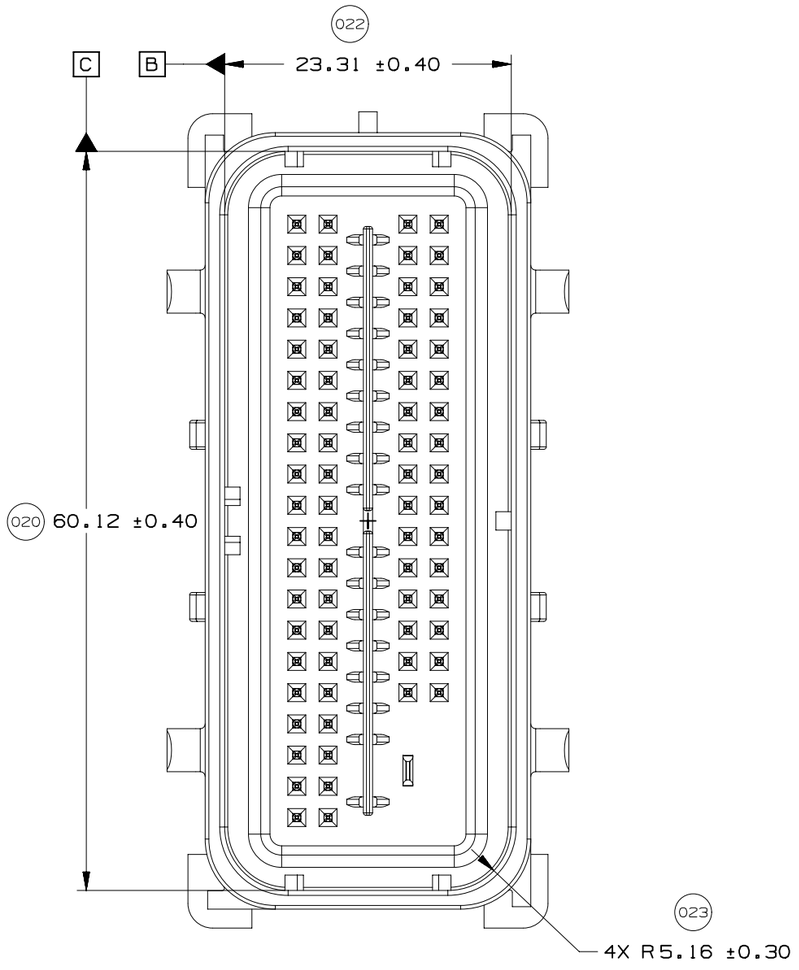


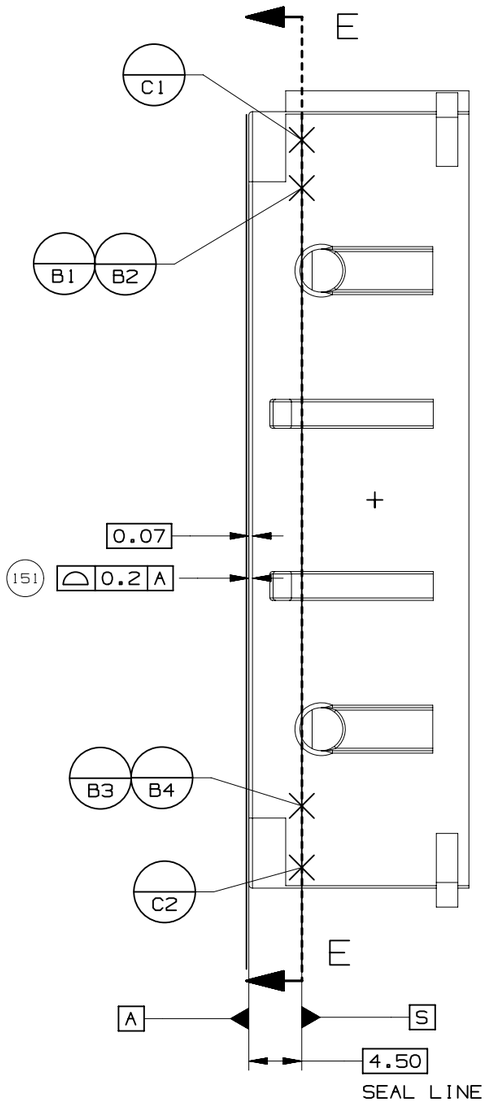


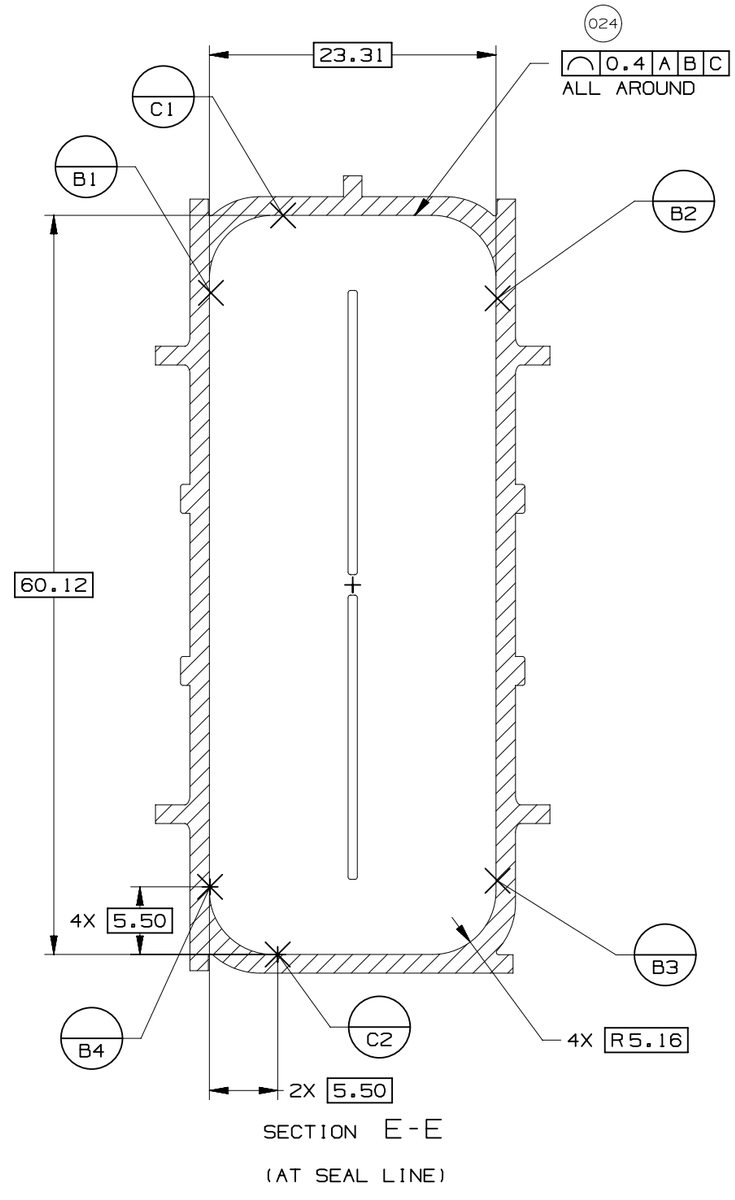


UNLESS SPECIFIED, TOLERANCE OF THE COMPONENT CONNECTOR INTERFACE TO BE 0.13 A B C

| | | | | | | | |
|---|---|---|---|---|---|---|---|
| | GM | PAGE TITLE: COMPONENT CONNECTOR INTERFACE | | DRAWING NUMBER: 12672833 | DWG STATUS ST: R | REV: 001 | PDI: | PAGE NUMBER: 15 OF 22 |

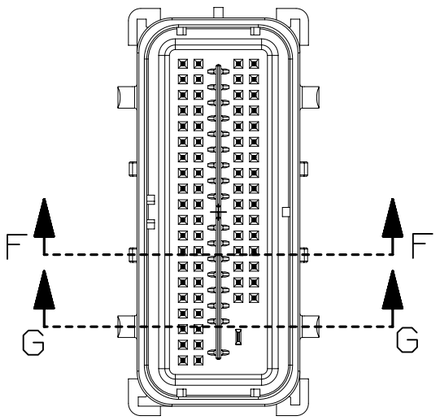


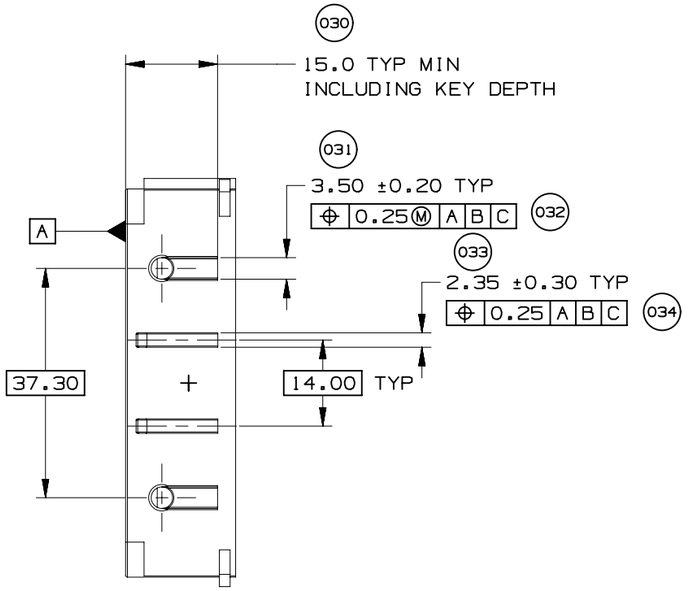


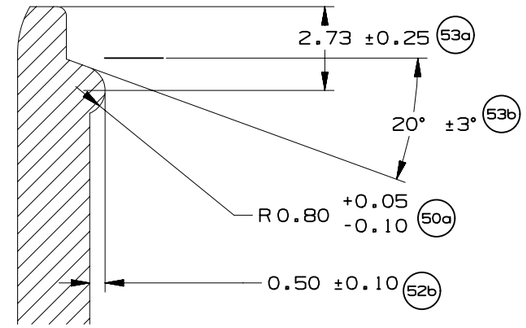


VIEW YY
SCALE 5:1

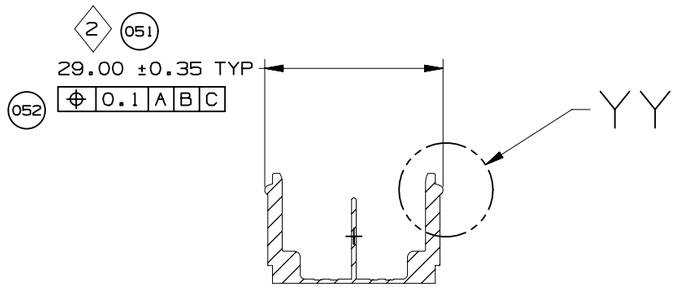


SECTION F-F
(RELEASE FEATURE)

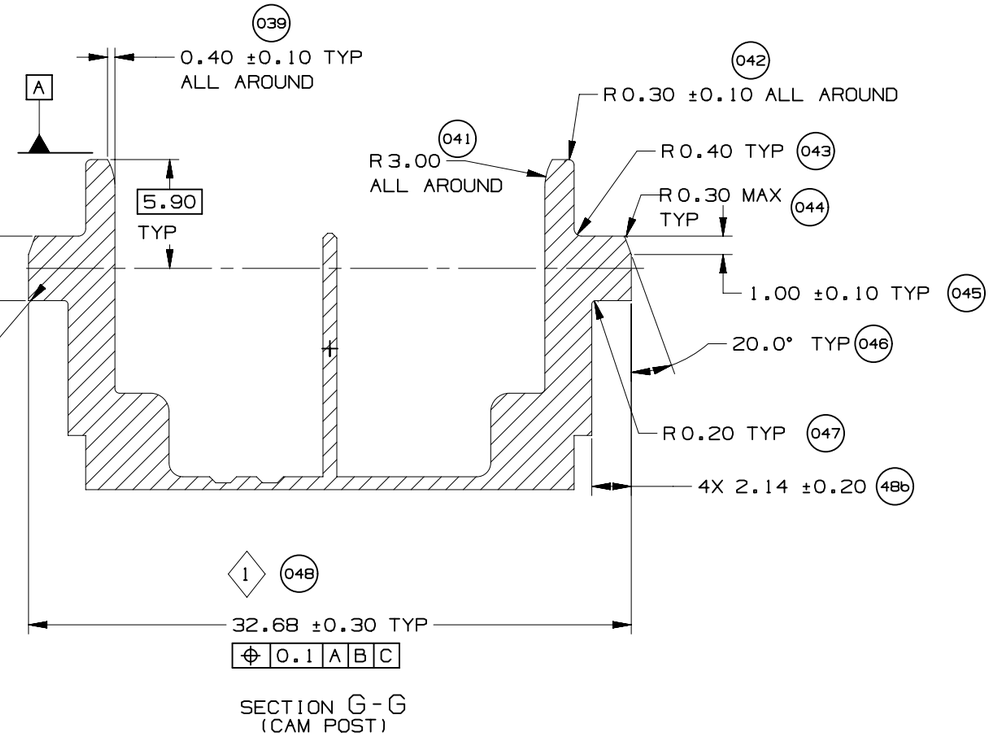


SECTION G-G
(CAM POST)

| | | | | | | |
|---|---|---|---|---|---|---|
| | GM | PAGE TITLE<br>COMPONENT CONNECTOR INTERFACE | | DRAWING NUMBER<br>12672833 | DWG STATUS<br>ST: R / REV: 001 / PDI: | PAGE NUMBER<br>16 OF 22 |

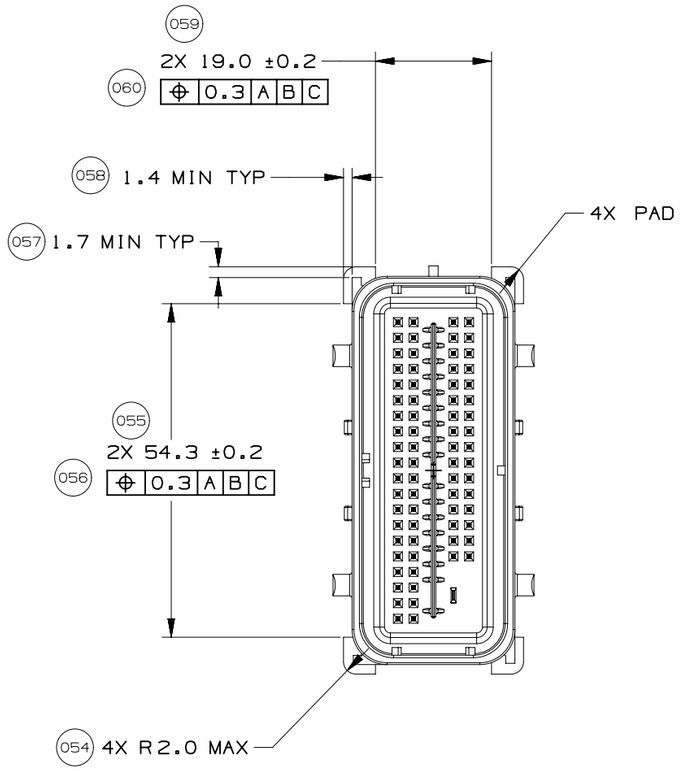


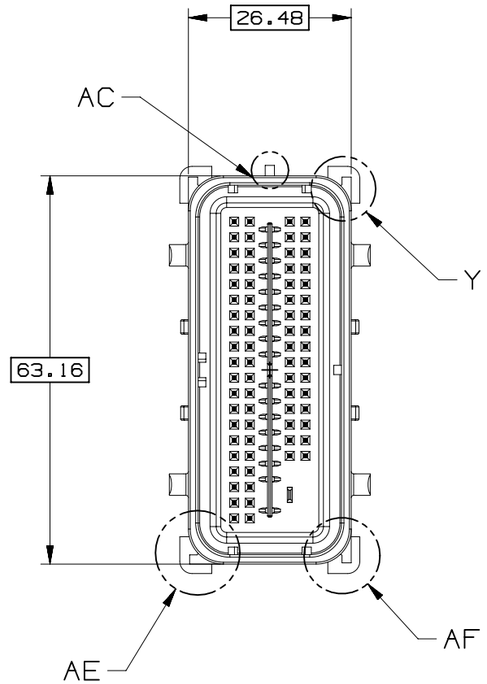


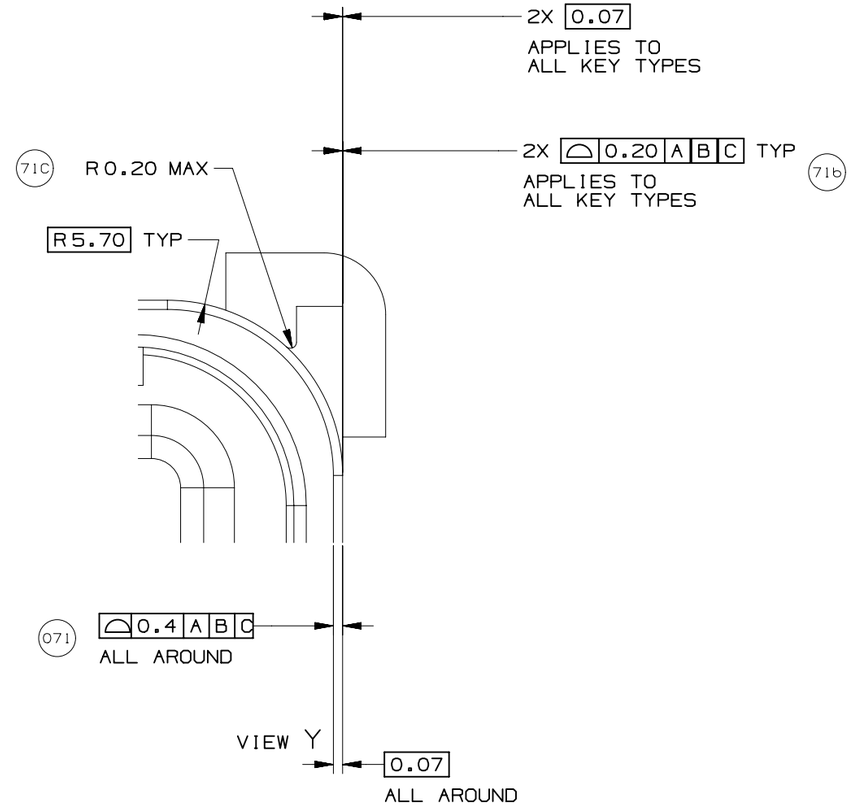


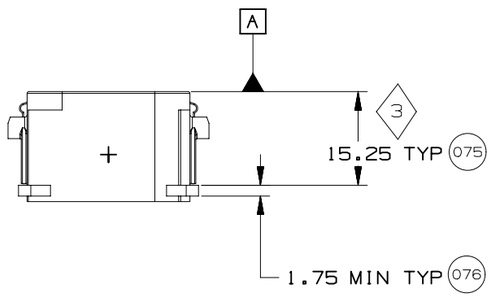


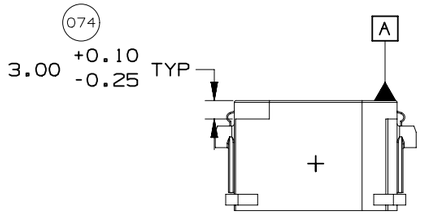


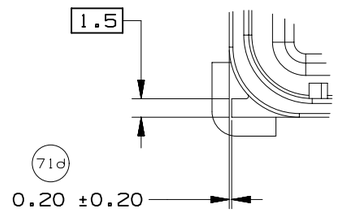


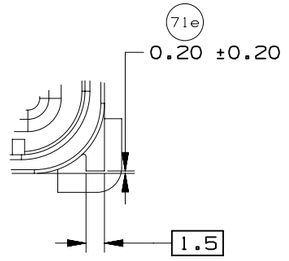


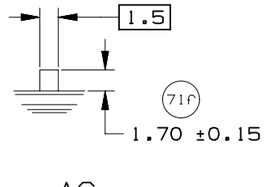


| | | | | | | |
|---|---|---|---|---|---|---|
| GM | PAGE TITLE: COMPONENT CONNECTOR INTERFACE | | DRAWING NUMBER: 12672833 | DWG STATUS ST: R | REV: 001 | PDI: | PAGE NUMBER: 17 OF 22 |

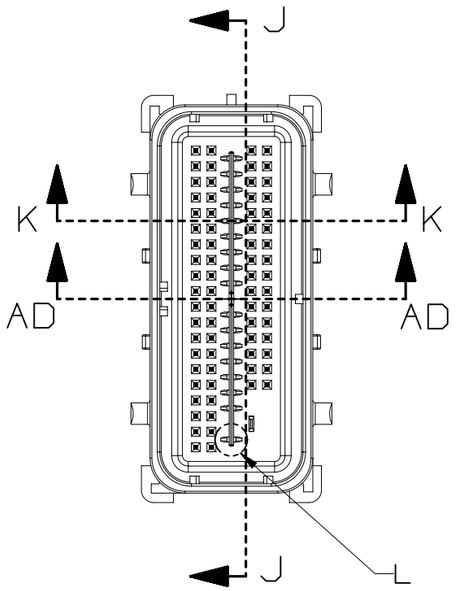


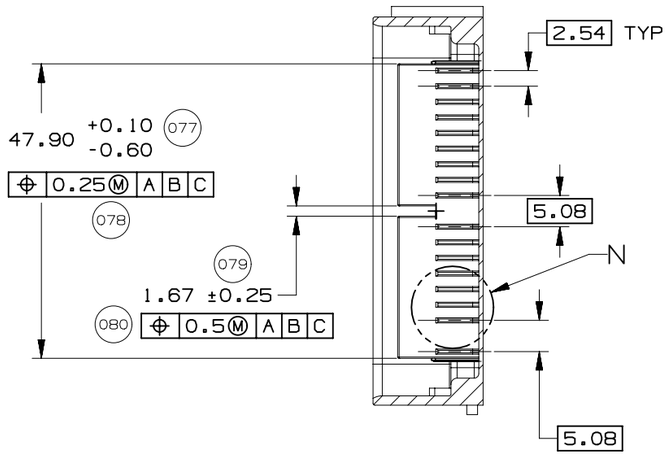


SECTION J-J

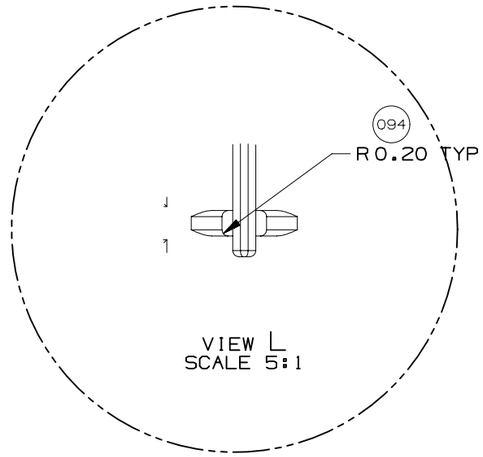


VIEW L
SCALE 5:1

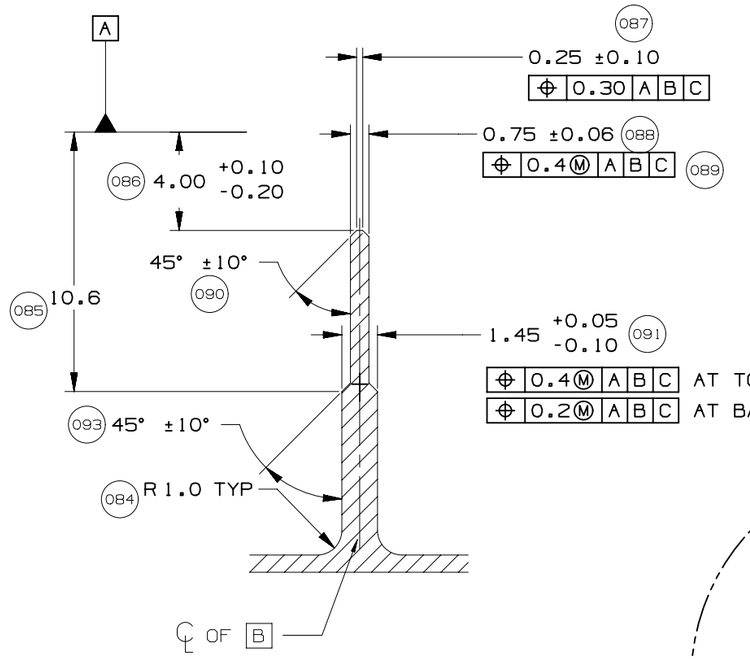


DETAIL M
TYPICAL
SCALE 4:1

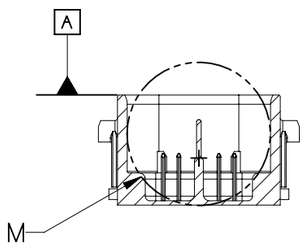


SECTION K-K

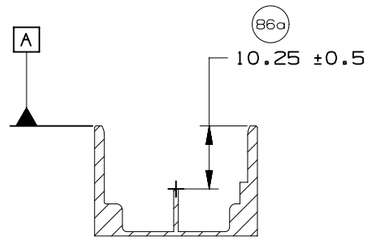


SECTION AD-AD

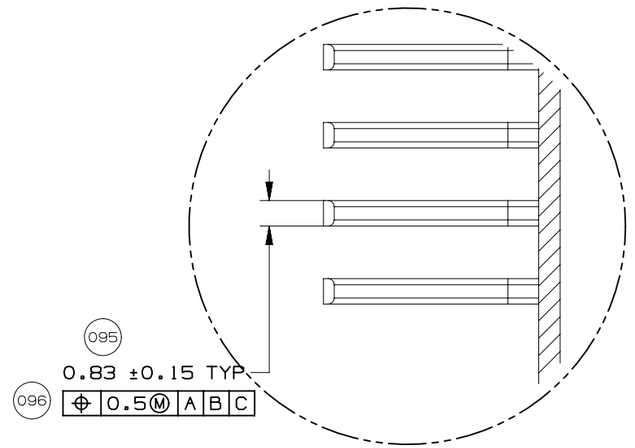


DETAIL N
SCALE 5:1

| | | | | | | | |
|---|---|---|---|---|---|---|---|
| | GM | PAGE TITLE: COMPONENT CONNECTOR INTERFACE | | DRAWING NUMBER: 12672833 | DWG STATUS: ST R / REV 001 / PDI | | PAGE NUMBER: 18 OF 22 |

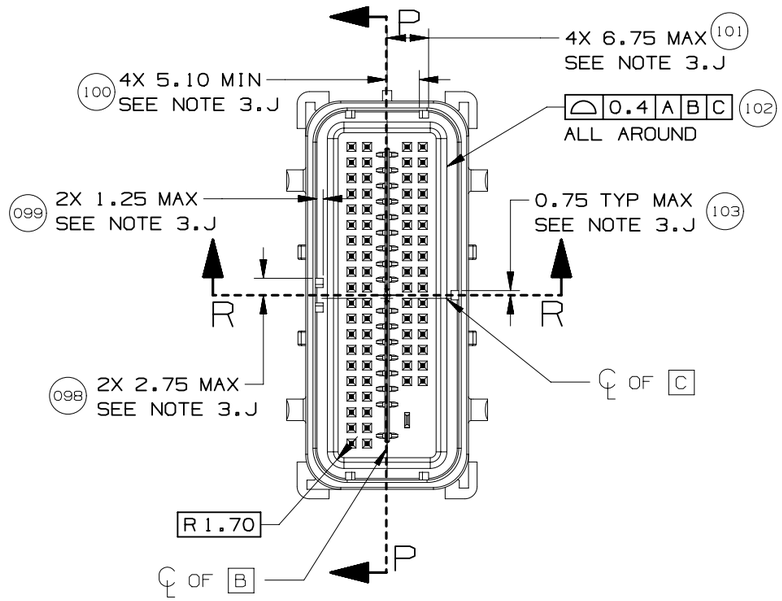


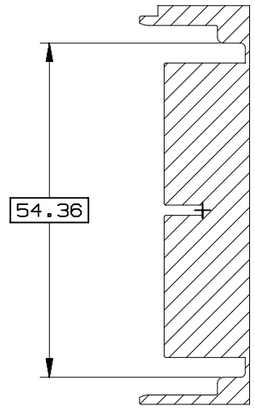


SECTION P-P

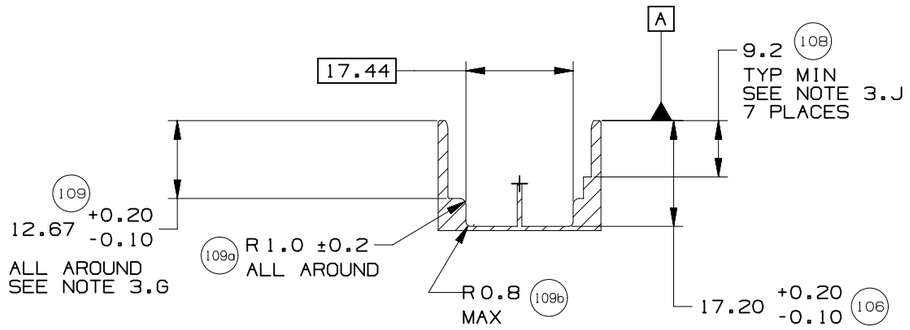


SECTION R-R

| | | | | | | | |
|---|---|---|---|---|---|---|---|
| | GM | PAGE TITLE<br>COMPONENT CONNECTOR INTERFACE | | DRAWING NUMBER<br>12672833 | DWG STATUS<br>ST: R / REV: 001 / PDI: | PAGE NUMBER<br>19 OF 22 | |

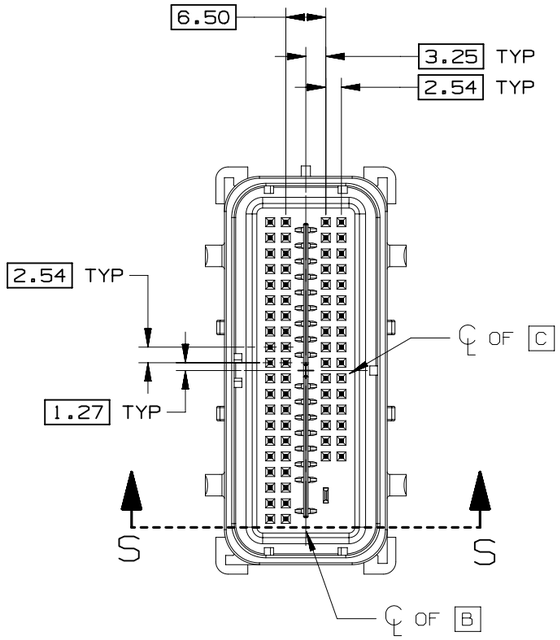


SECTION S-S




DETAIL T
TYPICAL
SCALE 5:1

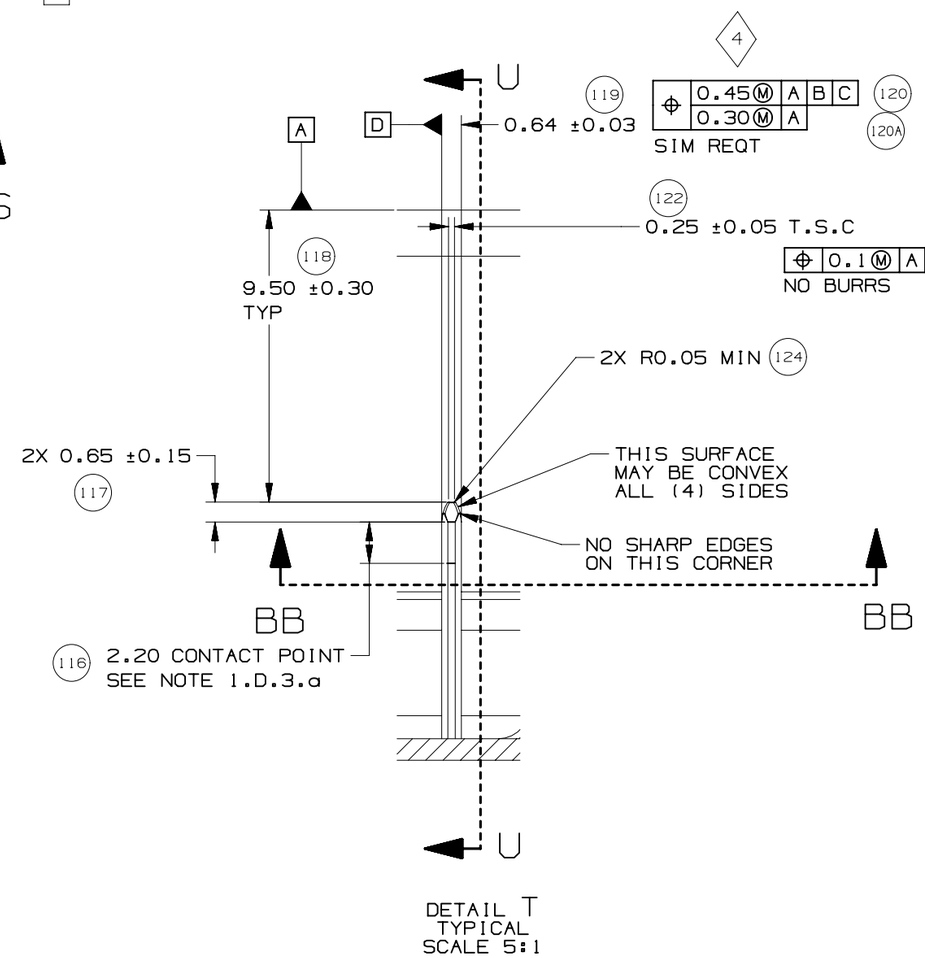


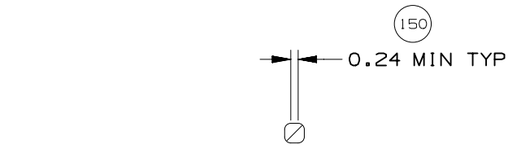


SECTION BB-BB

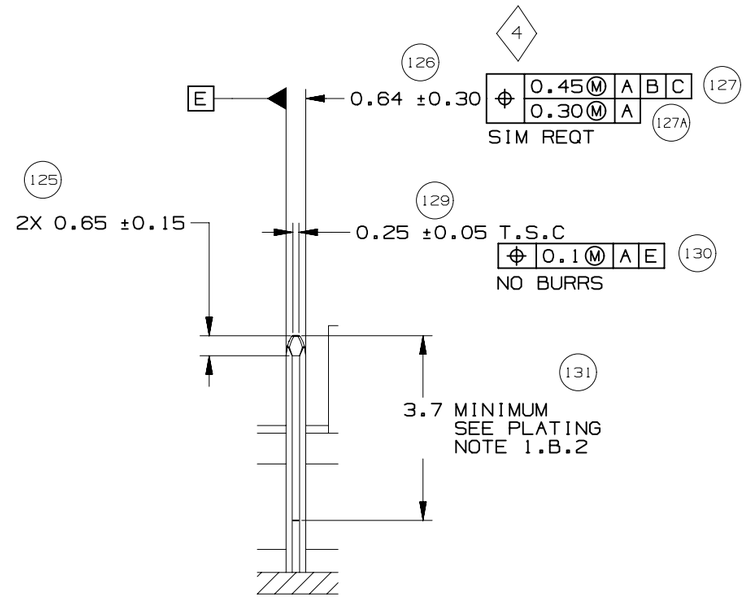


SECTION U-U
TYPICAL

| | | | | | | |
|---|---|---|---|---|---|---|
| GM | PAGE TITLE: COMPONENT CONNECTOR INTERFACE | | DRAWING NUMBER: 12672833 | DWG STATUS ST: R | REV: 001 | PDI: | PAGE NUMBER: 20 OF 22 |

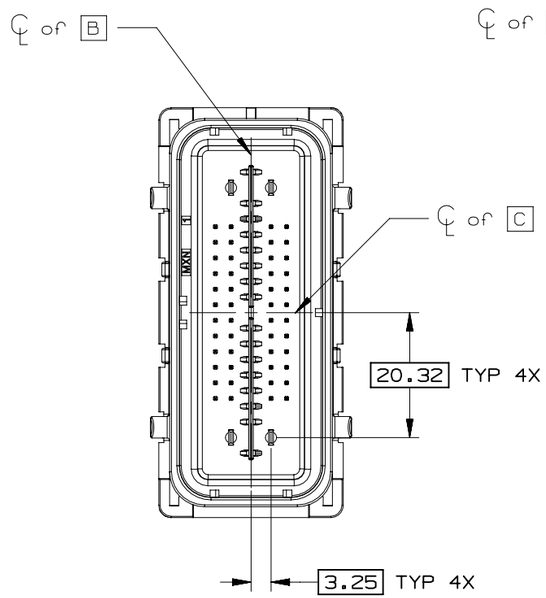


52 CKT COMPONENT
CONNECTOR INTERFACE

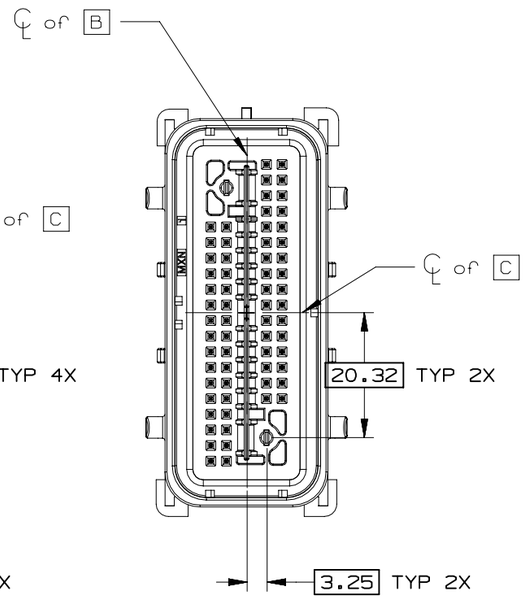


66 CKT COMPONENT
CONNECTOR INTERFACE

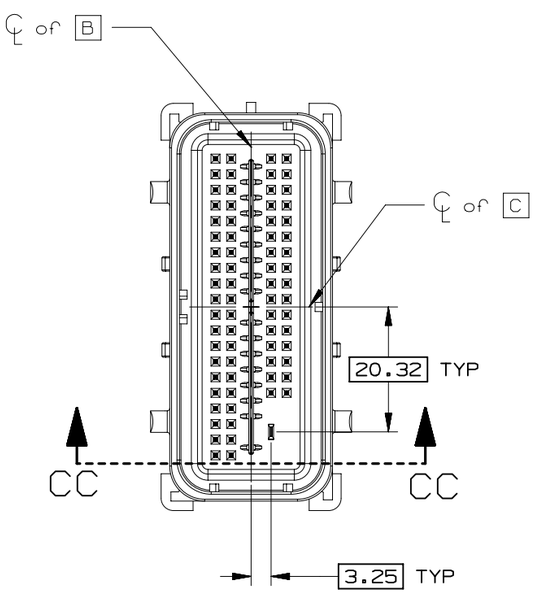


73 CKT COMPONENT
CONNECTOR INTERFACE

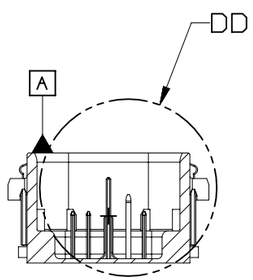


SECTION CC-CC

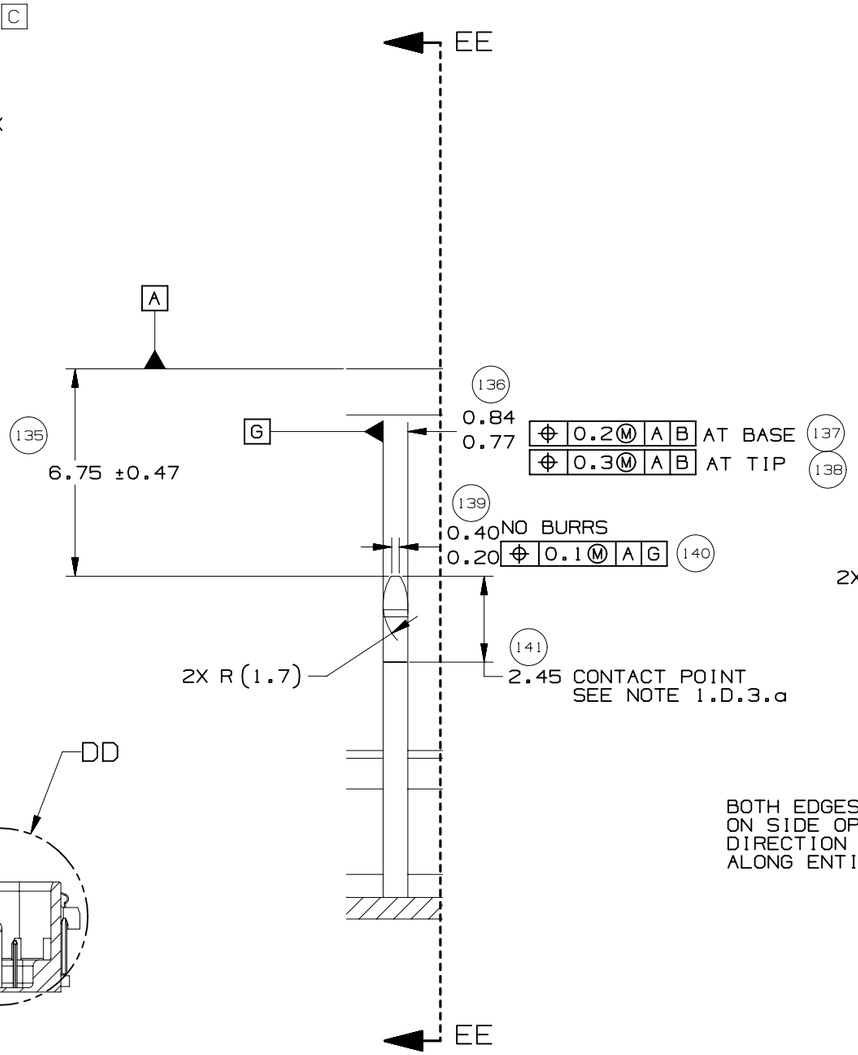


DETAIL DD
TYPICAL
SCALE 5:1

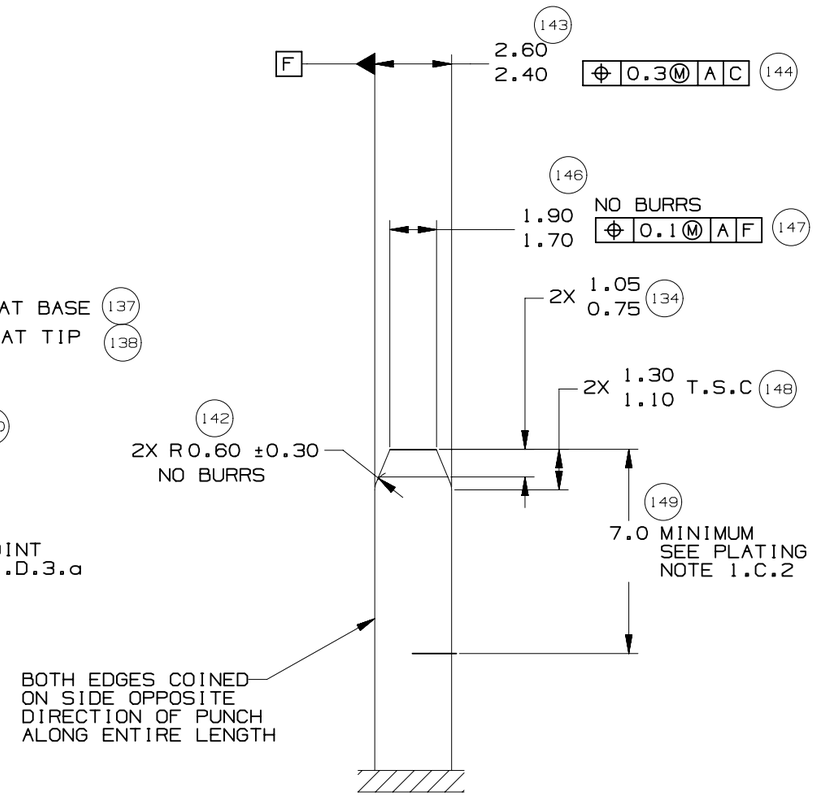


SECTION EE-EE
TYPICAL

| | | | | | | | |
|---|---|---|---|---|---|---|---|
| | GM | PAGE TITLE: COMPONENT CONNECTOR INTERFACE | | DRAWING NUMBER: 12672833 | DWG STATUS ST: R | REV: 001 | PDI: | PAGE NUMBER: 21 OF 22 |

| MOLEX MX64 RECEPTACLE TERMINAL INFORMATION | | | | | | | |
|---|---|---|---|---|---|---|---|
| ITEM | MOLEX P/N | GM P/N | WIRE SIZE MM2 | TYPE | PLATING | REEL WIND DIRECTION | COMMENTS |
| 1 | 34736-0025 | | 0.35 | ISO | SILVER | LEFT | |
| 2 | 34736-0026 | 12672850 | 0.35 | ISO | SILVER | RIGHT | |
| 3 | 34736-0027 | | 0.5 / 0.75 | ISO | SILVER | LEFT | |
| 4 | 34736-0028 | 12672851 | 0.5 / 0.75 | ISO | SILVER | RIGHT | |

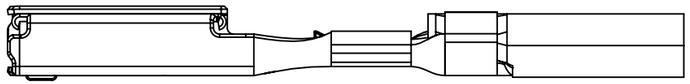

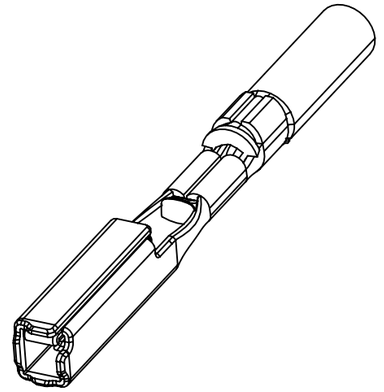

| CAVITY PLUGS | | | | | | | | | |
|---|---|---|---|---|---|---|---|---|---|
| ITEM | MFG | MFG P/N | GM P/N RD | SIZE | COLOR | MFG DRAWING | PROD SPEC | APP SPEC | COMMENTS |
| 1 | MOLEX | 34586-0001 | 12674820 | 0.64 | NATURAL | SD-34586-001 | PS-34566-0000 | AS-34566-001 | |
| 2 | YAZAKI | 7158-3114-90 | 12674821 | 2.8 | BLUE | 7158-3114-90 | YPES-11-04-062 | YPES-15-299 | |

ITEM 1

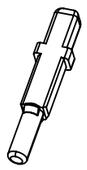

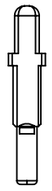

ITEM 2

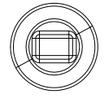

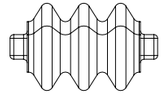

| | | | | | | | | |
|---|---|---|---|---|---|---|---|---|
| | GM | PAGE TITLE: ADDITIONAL COMPONENTS REQUIRED | | DRAWING NUMBER: 12672833 | DWG STATUS ST: R | REV: 001 | PDI: | PAGE NUMBER: 22 OF 22 |

| INDEX | |
|---|---|
| PAGE TITLE | PAGE |
| TITLE BLOCK | 1 |
| REVISION BLOCK | 2 |
| PART BLOCK | 3 |
| KPC BLOCK | 4 |
| COMPONENT TABLE | 5 |
| NOTES | 6 |
| NOTES | 7 |
| WIRE DRESS PACKAGING DIMENSIONS | 8 |
| LOCATION AND PACKAGING DIMENSIONS REFERENCING INTERFACE DATUMS B & C | 9 |
| LOCATION AND PACKAGING DIMENSIONS REFERENCING INTERFACE DATUM A | 10 |
| KEY ID REF - WIRE DRESS OPTION 0 | 11 |
| KEY ID REF - WIRE DRESS OPTION 9 | 12 |
| CIRCUIT CONFIGURATIONS | 13 |
| CIRCUIT CONFIGURATIONS | 14 |
| COMPONENT CONNECTOR INTERFACE | 15 |
| COMPONENT CONNECTOR INTERFACE | 16 |
| COMPONENT CONNECTOR INTERFACE | 17 |
| COMPONENT CONNECTOR INTERFACE | 18 |
| COMPONENT CONNECTOR INTERFACE | 19 |
| COMPONENT CONNECTOR INTERFACE | 20 |
| COMPONENT CONNECTOR INTERFACE | 21 |
| ADDITIONAL COMPONENTS REQUIRED | 22 |

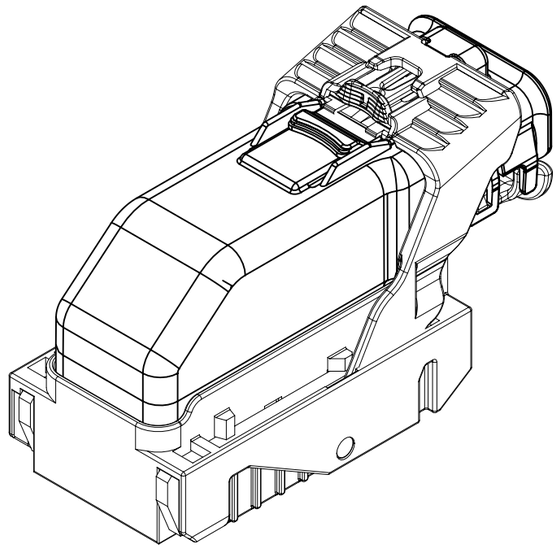

ISO VIEW

GM

**UNLESS OTHERWISE SPECIFIED:** THIS DOCUMENT IS IN ACCORDANCE WITH ASME Y14.5M-1994 AS AMMENDED BY THE GM GLOBAL DIMENSIONING AND TOLERANCING ADDENDUM-1997. ALL GEOMETRIC TOLERANCES AND RELATED DATUMS APPLY RFS. RULE #1 (PERFECT FORM AT MMC) DOES NOT APPLY WHEN A RELATIONSHIP BETWEEN FEATURES IS ESTABLISHED BY ORIENTATION OR LOCATION TOLERANCES. SEPARATE POSITION CALLOUTS MAY BE GAGED SEPARATELY REGARDLESS OF DATUM REFERENCES.

CHANGE RESTRICTED
NO MANUAL CHANGES

DO NOT SCALE

METRIC

DIMENSIONS SHOWN IN MILLIMETERS UNLESS OTHERWISE SPECIFIED

REFERENCE
12H (MOLEX AUTOMOTIVE)

| | DATE |
|---|---|
| DRAFTER | 05JN15 |
| APVD1 | |
| APVD2 | |
| APVD3 | |
| APVD4 | |
| APVD5 | |

DRAWING NAME
HARNESS CONN ASM-SEALED 52/66/73/80 CKTS,MX123

DRAWING NUMBER
12672833

| DWG STATUS | | |
|---|---|---|
| ST | REV | PDI |
| R | 001 | |

PAGE NUMBER
1 OF 22

| PAGE | DWG STATUS | | | | | REVISION HISTORY | AUTH | DR | CK | ENG |
|---|---|---|---|---|---|---|---|---|---|---|
| | DATE | ST | REV | CHG | PDI | | | | | |
| | 05JN15 | R | 001 | | | RELEASED TO PRODUCTION AT DLS A | CRMRJE | DFK | | |

| PAGE | DWG STATUS | | | | | REVISION HISTORY | AUTH | DR | CK | ENG |
|---|---|---|---|---|---|---|---|---|---|---|
| | DATE | ST | REV | CHG | PDI | | | | | |

| | | | | | |
|---|---|---|---|---|---|
| | PAGE TITLE: REVISION BLOCK | | DRAWING NUMBER: 12672833 | DWG STATUS: ST R / REV 001 / PDI | PAGE NUMBER: 2 OF 22 |

| HIERARCHY /QUANTITY | DWG ITM | DWG RLTN SHIP | PART NUMBER | P-A ITM | D L S | ST | REV | P D I | N M C I | MASS (KG) | PART NAME | NOTES |
|---|---|---|---|---|---|---|---|---|---|---|---|---|
| | 28 | RD | 12674821 | | A | C | 001 | | | 0.000 | YAZAKI: 7158-3114-90 | 2.8MM CAVITY PLUG |
| | 27 | RD | 12674820 | | A | | 001 | | | 0.000 | PLUG-WRG HARN CONN MX0.64 | |
| | 26 | RD | 12672851 | | A | | 001 | | | 0.000 | TERM-AG 0.5MM/0.75MM ISO,MX64 | |
| | 25 | RD | 12672850 | | A | | 001 | | | 0.000 | TERM-AG 0.35MM ISO,MX64 | |
| | 24 | RD | 12582676 | | A | C | 003 | | | 0.011 | WIRE HARNESS COVER | 52/66/73/80 WAY |
| | 23 | RD | 12672869 | | A | 2 | 001 | | | 0.050 | HARN CONN ASM 80 CKT | KEY J OPTION 9 |
| | 22 | RD | 12672871 | | A | 2 | 001 | | | 0.050 | HARN CONN ASM 80 CKT | KEY H OPTION 9 |
| | 21 | RD | 12672873 | | A | 2 | 001 | | | 0.050 | HARN CONN ASM 80 CKT | KEY G OPTION 9 |
| | 20 | RD | 12672868 | | A | 2 | 001 | | | 0.050 | HARN CONN ASM 80 CKT | KEY J OPTION 0 |
| | 19 | RD | 12672870 | | A | 2 | 001 | | | 0.050 | HARN CONN ASM 80 CKT | KEY H OPTION 0 |
| | 18 | RD | 12672872 | | A | 2 | 001 | | | 0.050 | HARN CONN ASM 80 CKT | KEY G OPTION 0 |
| | 17 | RD | 12672867 | | A | 2 | 001 | | | 0.050 | HARN CONN ASM 73 CKT | KEY F OPTION 9 |
| | 16 | RD | 12672865 | | A | 2 | 001 | | | 0.050 | HARN CONN ASM 73 CKT | KEY C OPTION 9 |
| | 15 | RD | 12672863 | | A | 2 | 001 | | | 0.050 | HARN CONN ASM 73 CKT | KEY B OPTION 9 |
| | 14 | RD | 12672861 | | A | 2 | 001 | | | 0.050 | HARN CONN ASM 73 CKT | KEY A OPTION 9 |
| | 13 | RD | 12672866 | | A | 2 | 001 | | | 0.050 | HARN CONN ASM 73 CKT | KEY F OPTION 0 |
| | 12 | RD | 12672864 | | A | 2 | 001 | | | 0.050 | HARN CONN ASM 73 CKT | KEY C OPTION 0 |
| | 11 | RD | 12672862 | | A | 2 | 001 | | | 0.050 | HARN CONN ASM 73 CKT | KEY B OPTION 0 |
| | 10 | RD | 12672860 | | A | 2 | 001 | | | 0.050 | HARN CONN ASM 73 CKT | KEY A OPTION 0 |
| | 09 | RD | 12672859 | | A | 2 | 001 | | | 0.050 | HARN CONN ASM 66 CKT | KEY C OPTION 9 |
| | 08 | RD | 12672857 | | A | 2 | 001 | | | 0.050 | HARN CONN ASM 66 CKT | KEY A OPTION 9 |
| | 07 | RD | 12672858 | | A | 2 | 001 | | | 0.050 | HARN CONN ASM 66 CKT | KEY C OPTION 0 |
| | 06 | RD | 12672856 | | A | 2 | 001 | | | 0.050 | HARN CONN ASM 66 CKT | KEY A OPTION 0 |
| | 05 | RD | 12672855 | | A | 2 | 001 | | | 0.054 | HARN CONN ASM 52 CKT | KEY C OPTION 9 |
| | 04 | RD | 12672853 | | A | 2 | 001 | | | 0.050 | HARN CONN ASM 52 CKT | KEY A OPTION 9 |
| | 03 | RD | 12672854 | | A | 2 | 001 | | | 0.054 | HARN CONN ASM 52 CKT | KEY C OPTION 0 |
| | 02 | RD | 12672852 | | A | 2 | 001 | | | 0.050 | HARN CONN ASM 52 CKT | KEY A OPTION 0 |
| | 01 | RD | 12672833 | | A | | 001 | | | 8.751 | HARNESS CONN ASM-SEALED 52/66/73/80 CKTS,MX | |
| | | | | | | | | | | | DRAWING | |

PARTS SHOWN ON DRAWING

GM

PAGE TITLE
PART BLOCK

DRAWING NUMBER
12672833

| DWG STATUS | | |
|---|---|---|
| ST | REV | PDI |
| R | 001 | |

# KEY PRODUCT CHARACTERISTICS
# (IN ACCORDANCE WITH QN 1805 OR QN 1050)

▽ SAFETY/COMPLIANCE

◇ FIT/FUNCTION

| TOTAL ON DRAWING | 4 |
|---|---|
| LAST NO. USED | 4 |

| NO | TYPE | DESCRIPTION | RATIONALE | PAGE/ZONE |
|---|---|---|---|---|
| 1 | F/F | 32.68 | IMPROVE CONNECTOR SYSTEM MATING | 16 |
| 2 | F/F | 29.00 | INSURE PROPER RELEASE OF LEVER | 16 |
| 3 | F/F | 15.25 | INSURE FINAL MATE POSITION | 17 |
| 4 | F/F | POSITIONAL TOLERANCE (2 PLACES) | INSURE CONNECTOR SYSTEM MATEABILITY | 20 |

| | | | | | APPLICABLE COMPONENTS | | | | | |
|---|---|---|---|---|---|---|---|---|---|---|
| LINE | MFG. | MFG. P/N | GM P/N | EFFECTIVE DATE | DESCRIPTION | KEY OPTION | WIRE DRESS OPTION | KEY CONFIG. | COLOR | STATUS |
| - | | | | | | | | | | |
| 1 | MOLEX | 34565-0003 | 12582676 | 02JN03 | MX123 DRESS COVER 52/66/73/80 CKT | N/A | N/A | N/A | BLACK | AVAILABLE |
| 2 | MOLEX | 160094-0001 | 12672852 | 01SP13 | MX123 HRNS CONN ASSY 52 CKT | A | 0 | 1458 | BLACK | AVAILABLE |
| 3 | MOLEX | 160094-0003 | 12672854 | 01SP13 | MX123 HRNS CONN ASSY 52 CKT | C | 0 | 2467 | BLUE | AVAILABLE |
| 4 | MOLEX | 160094-0013 | 12672853 | 01SP13 | MX123 HRNS CONN ASSY 52 CKT | A | 9 | 1458 | BLACK | AVAILABLE |
| 5 | MOLEX | 160094-0015 | 12672855 | 01SP13 | MX123 HRNS CONN ASSY 52 CKT | C | 9 | 2467 | BLUE | AVAILABLE |
| 6 | MOLEX | 34822-0013 | 12672856 | 01SP13 | MX123 HRNS CONN ASSY 66 CKT | A | 0 | 1458 | BLACK | AVAILABLE |
| 7 | MOLEX | 34822-0033 | 12672858 | 01SP13 | MX123 HRNS CONN ASSY 66 CKT | C | 0 | 2467 | BLUE | AVAILABLE |
| 8 | MOLEX | 34822-0023 | 12672857 | 01SP13 | MX123 HRNS CONN ASSY 66 CKT | A | 9 | 1458 | BLACK | AVAILABLE |
| 9 | MOLEX | 34822-0043 | 12672859 | 01SP13 | MX123 HRNS CONN ASSY 66 CKT | C | 9 | 2467 | BLUE | AVAILABLE |
| 10 | MOLEX | 34566-0103 | 12672860 | 11JN04 | MX123 HRNS CONN ASSY 73 CKT | A | 0 | 1458 | BLACK | AVAILABLE |
| 11 | MOLEX | 34566-0203 | 12672862 | 11JN04 | MX123 HRNS CONN ASSY 73 CKT | B | 0 | 1468 | ST GRAY | AVAILABLE |
| 12 | MOLEX | 34566-0303 | 12672864 | 09AP08 | MX123 HRNS CONN ASSY 73 CKT | C | 0 | 2467 | BLUE | AVAILABLE |
| 13 | MOLEX | 34566-0603 | 12672866 | 05DC14 | MX123 HRNS CONN ASSY 73 CKT | F | 0 | 1357 | NATURAL | AVAILABLE |
| 14 | MOLEX | 34566-1303 | 12672861 | 11JN04 | MX123 HRNS CONN ASSY 73 CKT | A | 9 | 1458 | BLACK | AVAILABLE |
| 15 | MOLEX | 34566-1403 | 12672863 | 11JN04 | MX123 HRNS CONN ASSY 73 CKT | B | 9 | 1468 | ST GRAY | AVAILABLE |
| 16 | MOLEX | 34566-1503 | 12672865 | 09AP08 | MX123 HRNS CONN ASSY 73 CKT | C | 9 | 2467 | BLUE | AVAILABLE |
| 17 | MOLEX | 34566-1803 | 12672867 | 05DC14 | MX123 HRNS CONN ASSY 73 CKT | F | 9 | 1357 | NATURAL | AVAILABLE |
| 18 | MOLEX | 34566-0703 | 12672872 | 09AP08 | MX123 HRNS CONN ASSY 80 CKT | G | 0 | 1358 | BLUE | AVAILABLE |
| 19 | MOLEX | 34566-0803 | 12672870 | 11JN04 | MX123 HRNS CONN ASSY 80 CKT | H | 0 | 2458 | ST GRAY | AVAILABLE |
| 20 | MOLEX | 34566-0903 | 12672868 | T.B.D | MX123 HRNS CONN ASSY 80 CKT | J | 0 | 2457 | BLACK | NOT ACTIVE |
| 21 | MOLEX | 34566-1903 | 12672873 | 09AP08 | MX123 HRNS CONN ASSY 80 CKT | G | 9 | 1358 | BLUE | AVAILABLE |
| 22 | MOLEX | 34566-2003 | 12672871 | 11JN04 | MX123 HRNS CONN ASSY 80 CKT | H | 9 | 2458 | ST GRAY | AVAILABLE |
| 23 | MOLEX | 34566-2103 | 12672869 | T.B.D | MX123 HRNS CONN ASSY 80 CKT | J | 9 | 2457 | BLACK | NOT ACTIVE |
| 24 | MOLEX | 34736-0028 | 12672851 | 01AU10 | MX64 RCPT TERM Ag 0.5mm/0.75mm ISO GAGE B (RIGHT PAYOFF) | N/A | N/A | N/A | N/A | AVAILABLE |
| 25 | MOLEX | 34736-0026 | 12672850 | 01AU10 | MX64 RCPT TERM Ag 0.35mm ISO GAGE B (RIGHT PAYOFF) | N/A | N/A | N/A | N/A | AVAILABLE |
| 26 | MOLEX | 34586-0001 | 12674820 | 11JN04 | MX123 0.64mm GROMMET PLUG | N/A | N/A | N/A | NATURAL | AVAILABLE |
| 27 | YAZAKI | 7116-4150-02 | 12588066 | 02JN03 | 2.8mm YESC SEALED FEMALE TERMINAL TIN 0.35mm2-0.50mm2 | N/A | N/A | N/A | N/A | NOT ACTIVE |
| 28 | YAZAKI | 7116-4151-02 | 12588067 | 02JN03 | 2.8mm YESC SEALED FEMALE TERMINAL TIN 0.75mm2-1.0mm2 | N/A | N/A | N/A | N/A | NOT ACTIVE |
| 29 | YAZAKI | 7116-4152-02 | 12582685 | 02JN03 | 2.8mm YESC SEALED FEMALE TERMINAL TIN 1.5mm2-2.5mm2 | N/A | N/A | N/A | N/A | AVAILABLE |
| 30 | YAZAKI | 7158-3111-60 | 12588068 | 02JN03 | 2.8mm CABLE SEAL (wire O.D. range 1.2mm-1.9mm) | N/A | N/A | N/A | GREEN | NOT ACTIVE |
| 31 | YAZAKI | 7158-3112-70 | 12588069 | 02JN03 | 2.8mm CABLE SEAL (wire O.D. range 1.8mm-2.3mm) | N/A | N/A | N/A | YELLOW | NOT ACTIVE |
| 32 | YAZAKI | 7158-3113-40 | 12582686 | 02JN03 | 2.8mm CABLE SEAL (wire O.D. range 2.1mm-3.0mm) | N/A | N/A | N/A | WHITE | AVAILABLE |
| 33 | YAZAKI | 7158-3114-90 | 12674821 | 02JN03 | 2.8mm YESC CAVITY PLUG | N/A | N/A | N/A | BLUE | AVAILABLE |
| 34 | MOLEX | 63825-8400 | N/A | 02JN03 | MX64 TERM HAND CRIMP TOOL | N/A | N/A | N/A | N/A | AVAILABLE |
| 35 | MOLEX | 63813-1400 | XX019826 | 02JN03 | MX64 TERM SERVICE TOOL | N/A | N/A | N/A | N/A | AVAILABLE |
| 36 | MOLEX | 63902-5300 | N/A | 02JN03 | MX64 CRIMP APPLICATOR with TOOL KIT 0.5/0.75mm2 PAYOFF DIRECTION D (left payoff) (contact Molex for payoff detail) | N/A | N/A | N/A | N/A | AVAILABLE |
| 37 | MOLEX | 63902-5370 | N/A | 02JN03 | MX64 APPLICATOR TOOL KIT 0.5/0.75mm2 | N/A | N/A | N/A | N/A | AVAILABLE |
| 38 | MOLEX | 63902-5100 | N/A | 02JN03 | MX64 CRIMP APPLICATOR with TOOL KIT 0.35mm2 PAYOFF DIRECTION D (left payoff) (contact Molex for payoff detail) | N/A | N/A | N/A | N/A | AVAILABLE |
| 39 | MOLEX | 63902-5170 | N/A | 02JN03 | MX64 APPLICATOR TOOL KIT 0.35mm2 | N/A | N/A | N/A | N/A | AVAILABLE |
| 40 | SPX | J35616-64 | T.B.D. | 02JN03 | 0.64mm PROBE TOOL (for rcpt) | N/A | N/A | N/A | N/A | AVAILABLE |
| 41 | SPX | J35616-64A | T.B.D. | 02JN03 | 0.64mm PROBE TOOL WITH EXT (for rcpt) | N/A | N/A | N/A | N/A | AVAILABLE |
| 42 | SPX | J35616-65 | T.B.D. | 02JN03 | 0.64mm PROBE TOOL WITH EXT (for pin) | N/A | N/A | N/A | N/A | AVAILABLE |
| 43 | SPX | J35616-4A | T.B.D. | 02JN03 | 2.8mm PROBE TOOL (for rcpt) | N/A | N/A | N/A | N/A | AVAILABLE |
| 44 | YAZAKI | X39899-J374 | 12094430 | 02JN03 | 2.8mm TERM SERVICE TOOL | N/A | N/A | N/A | N/A | AVAILABLE |
| 45 | TQI | 7000-1006 | N/A | 15JN15 | 52 CKT PASS THROUGH ADAPTERS | N/A | N/A | N/A | BLACK | AVAILABLE |
| 46 | TQI | 7000-1002 | N/A | 15JN15 | 66 CKT PASS THROUGH ADAPTERS | N/A | N/A | N/A | BLACK | AVAILABLE |
| 47 | TQI | 79917-0061 | N/A | 15JN15 | 73 CKT PASS THROUGH ADAPTERS | N/A | N/A | N/A | BLACK | AVAILABLE |
| 48 | TQI | 79917-0066 | N/A | 15JN15 | 80 CKT PASS THROUGH ADAPTERS | N/A | N/A | N/A | BLACK | AVAILABLE |

* - MX123 DRESS COVER 52/66/73/80 CKT MATES TO ANY MX123 HARN CONN ASSY SHOWN ON TABLE ABOVE

# NOTES: UNLESS OTHERWISE SPECIFIED

1. MATERIAL FOR INTERFACE:

A. RESIN:
   1. 30% G.F. PBT; 20% MAX. (BY WEIGHT) REGRIND.
   2. MATING CONNECTOR INTERFACE PART COLOR MUST BE SAME AS MATCHING KEYED HARNESS CONNECTOR ASSEMBLY.
   3. MUST BE VALIDATED FOR INDIVIDUAL DEVICE APPLICATION REQUIREMENTS.

B. 0.64MM PINS:
   1. BASE MATERIAL: COPPER ALLOY; CONDUCTIVITY >= 28% IACS AT 20°C; TENSILE STRENGTH >= 635 N/mm²;SURFACE ROUGHNESS $R_a$ 6 MAX.
   2. PLATING FINISH: SILVER (Ag). PLATING TO BE 1.9-3.3 um ELECTRODEPOSITED SEMI-BRIGHT SILVER OVER 1.25-2.25 um DUCTILE SULPHAMATE NICKEL PER NOTE 1(D).
   3. ANTI-TARNISH: SYNTHETIC HYDROCARBON CONTACT SURFACE FINISH OR EQUIVALENT APPLIED WITHOUT VOID TO CONTACT AREA (MIN 3.7mm FROM PIN TIP).

C. 2.8MM BLADE:
   1. BASE MATERIAL: COPPER ALLOY; CONDUCTIVITY>= 28% IACS AT 20°C; TENSILE STRENGTH >= 350 N/mm²; SURFACE ROUGHNESS $R_a$ 6 MAX.
   2. PLATING FINISH: TIN. PLATING TO BE 2.5-5.0 um ELECTRODEPOSITED TIN, MATTE FINISH OVER 1.25-2.5um DUCTILE SULPHAMATE NICKEL PER NOTE 1(D).

D. PLATING REQUIREMENTS:

1. SILVER PLATING
   a. 99.5% PURE SEMI-BRIGHT WITH NO ORGANIC BRIGHTNERS OR CHROMATES.

2. NICKEL PLATING
   a. ELECTRODEPOSITED DUCTILE SULFAMATE NICKEL WITH A NON-BRIGHTENED FINISH. NO ORGANIC OR BRIGHTENING AGENTS SHALL BE ALLOWED.
   b. SHALL ONLY BE USED AS AN UNDERLYING PLATING AND MAY NOT BE USED AS AN ELECTRICAL CONTACT SURFACE PLATING.
   c. SHALL BE NODULE FREE WHEN VIEWED AT 10X MAGNIFICATION IN MEASURED IN CONTACT SURFACE AREA PLUS 0.5MM PERIMETER AROUND THE CONTACT SURFACE AREA.
   d. ALL PLATINGS SHALL HAVE A 1.0% MAXIMUM BY WEIGHT IMPURITIES. IMPURITIES ARE DEFINED AS ALL ELEMENTS NOT THE PRIMARY PLATING OR HARDENING AGENT IF APPLICABLE, AS DETERMINED BY WET CHEMICAL ANALYSIS OR AUGER METHOD. NO SINGLE IMPURITY SHALL EXCEED 0.1% MAXIMUM BY WEIGHT.

3. TESTING
   a. THICKNESS TO BE MEASURED IN CONTACT SURFACE AREA PLUS 0.5MM PERIMETER AROUND THE CONTACT SURFACE AREA AS DESIGNATED IN THE DRAWING. THICKNESS SHALL BE DETERMINED BY METHOD OF X-RAY (XRF).
   b. PLATING ADHESION SHALL BE TESTED BY A BEND TEST FOR ALL METALS. THE TEST SAMPLE SHALL BE BENT 90 DEGREES TO DETERMINE DEPOSIT ADHESION. TESTING SHALL BE COMPLETED IN ACCORDANCE WITH ASTM SPEC B571.

2. DESIGN - GENERAL:

A. THIS IS A 100% CAD GENERATED PART. THE CAD MATHEMATICAL DATA IS THE MASTER FOR THIS PART. FOR DIMENSIONAL OR ANY INFORMATION NOT SHOWN ON THIS DRAWING, ANALYZE THE CAD MODEL.
B. TOLERANCES:
   1. LINEAR  0.X ± 0.30
              0.XX ± 0.10
              0.XXX ± 0.10
   2. ANGULAR X° ± 3°
   3. ⌓ | 1.0 | A | B | C
C. MINIMUM WALL THICKNESS REQUIRED: 1.3mm.
D. CORNERS SHOWN AS SHARP TO BE R 0.2 MAX.
E. LETTERING SHALL BE 0.15 MAX RAISED IN 0.20 MAX RECESS PAD. THIS INCLUDES MATERIAL CODE, RECYCLING CODE, CAVITY ID AND DATE CODE.
F-1. PARTS MUST BE FREE OF DISCOLORATION, SALT RESIDUE AND OTHER IMPERFECTIONS THAT AFFECT FIT OR FUNCTION.
F-2. SCRATCHES OR DENTS NOT TO EXCEED 0.013mm IN DEPTH.
G. FOLLOWING PRODUCTION CODES TO BE PERMANENTLY MARKED & HUMAN READABLE TO A LETTER HEIGHT OF 1.5 ±0.5MM X 0.3 MAX DEEP
   1. MATERIAL #: XXXXX-XXXX
   2. DATE CODE: JJJY (JULIAN DAY, LAST DIGIT OF YEAR)
   3. INSPECTION MACHINE CODE + SERIAL #: X_XXXXX

3. DESIGN - MANUFACTURING:

A. DRAFT TO BE WITHIN TOLERANCE.
B. ALLOWABLE FLASH MAX 0.2 HIGH X MAX 0.13 THICK.
C. ALLOWABLE PARTING LINE MISMATCH 0.2 MAX.
D. EJECTOR PINS MARK TO BE FLUSH TO 0.25 MAX DEPRESSED.
E. ALLOWABLE GATE VESTIGE FLUSH TO 0.25 MAX PROTRUSION.
F. NO EXTERNAL MOLD RELEASE AGENT ALLOWED DURING MANUFACTURING.
G. STEEL THAT FORMS THE INDICATED SURFACE MUST BE POLISHED WITH A DIAMOND FINISH (SPI A-2) OVER THE FULL PERIPHERY OF THE TOOL. SURFACE MUST HAVE NO MISMATCH.
H. ANY PROCESS LUBRICANT REMAINING ON THE TERMINAL MUST NOT VARNISH OR DEGRADE IT'S ELECTRICAL PERFORMANCE UP TO A MAXIMUM CLASS AMBIENT TEMPERATURE PER SAE USCAR-2 FOR 1008 HOURS. PROCESS LUBRICANTS SHOULD BE APPROVED BY THE RESPONSIBLE ENGINEER.
J. OPTIONAL FEATURES PROVIDED FOR AUTOMATION.
K. PART MUST BE FREE FROM BURRS AND SHARP EDGES, WHICH MIGHT BE DETRIMENTAL TO SATISFACTORY ASSEMBLY, SAFE HANDLING OR FUNCTION OF PART.
L. PARTS AS DELIVERED TO ASSEMBLY SHALL BE CLEAN AND FREE OF DEBRIS, RESIDUAL ABRASIVE MATERIAL AND CORROSION PRODUCTS ADVERESLY AFFECTING FUNCTION OR APPEARENCE.
M. RESTRICTED AND REPORTABLE SUBSTANCES FOR PARTS PER GMW3059.

# NOTES: UNLESS OTHERWISE SPECIFIED

4. SYSTEM REQUIREMENTS:

   A. HARNESS CONNECTOR IS COMPATIBLE WITH THE FOLLOWING ISO WIRE SIZE NO'S:
      0.35mm2, MEETING GMW15626 - MIN OD OF 1.30MM
      0.50mm2, MEETING GMW15626
      0.75mm2, MEETING GMW15626 - MAX OD OF 2.06MM

   B. CABLE TIE SPECIFICATIONS:
      1. CABLE TIE:
         TENSILE RATING: 220N / (50lbs) MIN
         TIE LENGTH: 186mm MIN
         TIE WIDTH: 4.75mm MAX
         MATERIAL: NYLON
      2. INSTALLATION:
         CABLE TIE TENSION: 190N MIN
      3. DRESSED WIRE BUNDLE PACKAGING: SEE FIG. 1

   C. WHEN MATED WITH COMPONENT CONNECTOR INTERFACE AND/OR DRESS COVER, HARNESS CONNECTOR SYSTEM CONFORMS TO THE FOLLOWING:
      1. SAE/USCAR-2, REV: 3 APRIL, 2001; CLASS 3
      2. FIELD CORRELATED LIFE TEST, SAE/USCAR-20, NOV. 2001
      3. GMW #3191 AUGUST 22, 2000 (DRAFT); TEMPERATURE CLASS 3, SEALING CLASS 1, VIBRATION CLASS 2
      4. RESTRICTED AND REPORTABLE CHEMICALS PER GMW #3059, REV: D AUGUST 2002
      5. TPA USER FORCES (FULLY POPULATED WITH TERMINALS)
         a. REMOVAL FROM LOCK TO PRE-SET: <=120N

   D. WIRE SPECIFICATIONS:
      1. WIRE SURFACE MUST BE FREE OF SCRATCHES, GROOVES OR DENTS WHERE FUNCTIONAL

5. TERMINAL CURRENT RATINGS:

   A. MX64 RCPT TERM
      ALL TESTING DONE IN ACCORDANCE WITH USCAR-2 REV5 SECTION 5.3

      1. MX64 RCPT TERM Ag 0.50/0.75mm2 CRIMPED TO 0.75mm2 ISO WIRE AND MATED TO MX123 0.64MM PIN: SEE TABLE BELOW
      2. MX64 RCPT TERM Ag 0.35mm2 CRIMPED TO 0.35mm2 ISO WIRE AND MATED TO MX123 0.64MM PIN: SEE TABLE BELOW

| WIRE | CURRENT RATING | | | |
|---|---|---|---|---|
| | 23'C | 85'C | 105'C | 125'C |
| 0.75mm2 | 11.3A | 11.3A | 9.5A | 6.6A |
| 0.50mm2 | 10.0A | 10.0A | 8.3A | 5.7A |
| 0.35mm2 | 8.5A | 8.5A | 7.1A | 5.0A |

   B. 2.8MM RCPT TERM
      ALL TESTING DONE IN ACCORDANCE WITH MOLEX DVP&R 0279 (TR # 7125)

      1. 2.8MM RCPT TERM TIN 2.0mm2 CRIMPED TO 2.0mm2 ISO WIRE AND MATED TO MX123 2.8MM BLADE: 25.6 AMPS AT 125° C

6. CONTACT MOLEX AUTOMOTIVE FOR AVAILABLE CUSTOM PATTERNS OF CAVITIES OPEN FOR CIRCUITS - SEE GM DRAWING 13507496

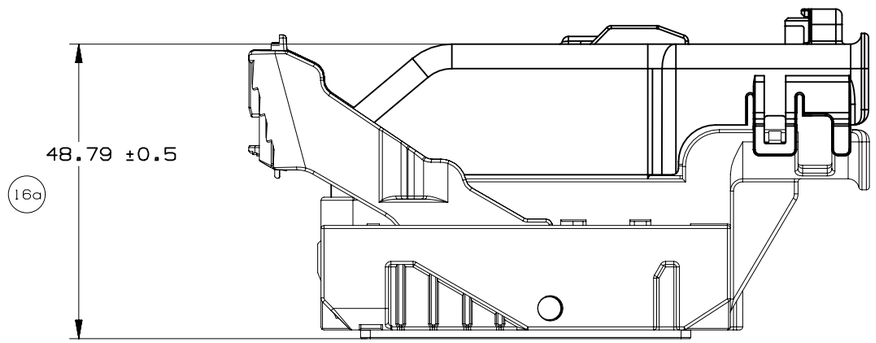


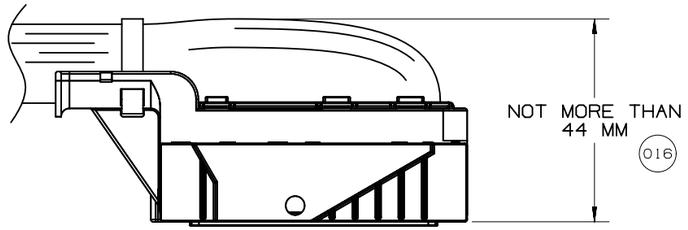


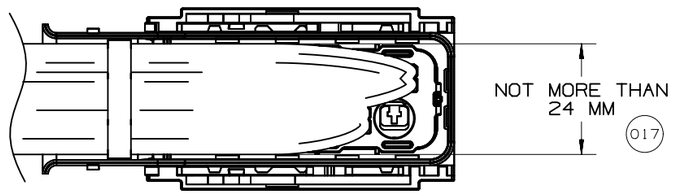


Fig. 1

| | | | | | | | | |
|---|---|---|---|---|---|---|---|---|
| | GM | PAGE TITLE<br>WIRE DRESS PACKAGING DIMENSIONS | | DRAWING NUMBER<br>12672833 | DWG STATUS<br>ST: R | REV: 001 | PDI: | PAGE NUMBER<br>8 OF 22 |

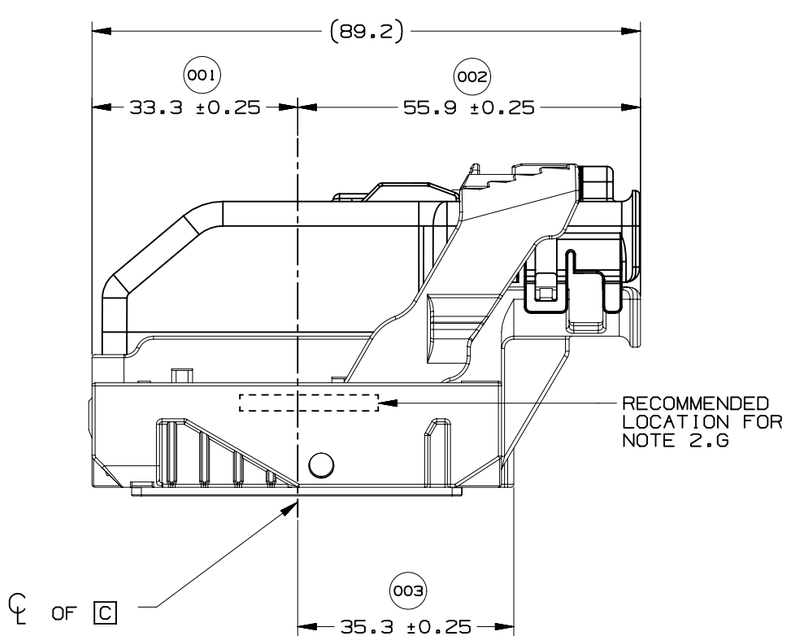


WIRE DRESS OPTION 0 SHOWN

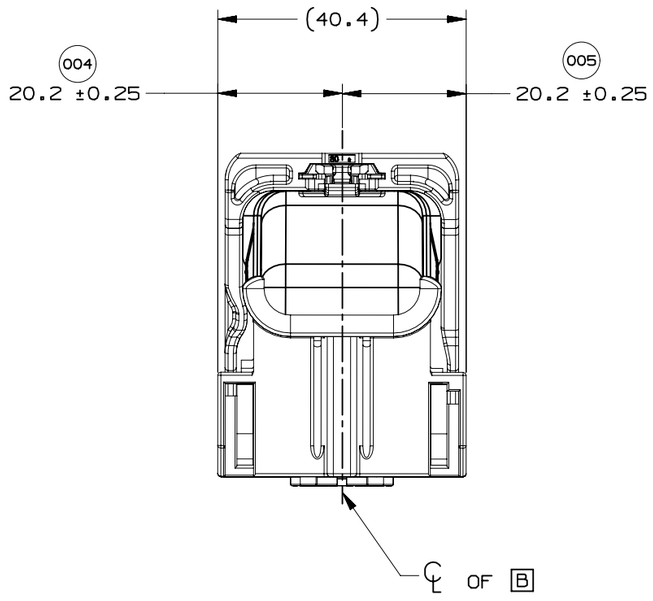


WIRE DRESS OPTION 0 SHOWN

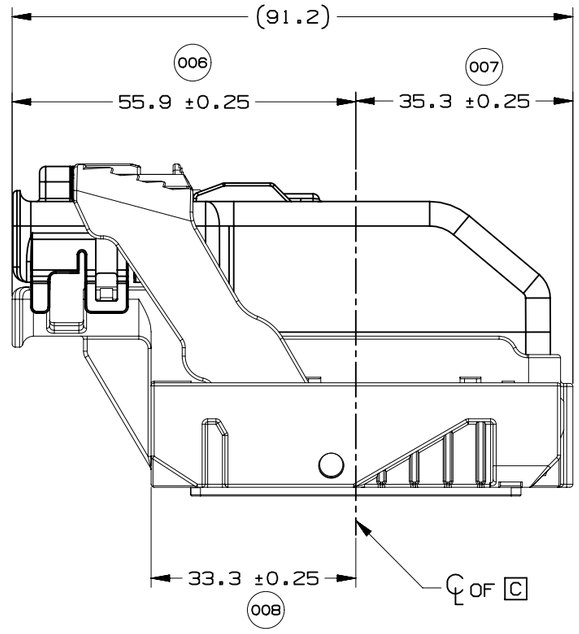


WIRE DRESS OPTION 9 SHOWN

| | | | | | | | |
|---|---|---|---|---|---|---|---|
| | GM | PAGE TITLE<br>LOCATION AND PACKAGING DIMENSIONS<br>REFERENCING INTERFACE DATUMS B & C | | DRAWING NUMBER<br>12672833 | DWG STATUS<br>ST: R / REV: 001 / PDI: | | PAGE NUMBER<br>9 OF 22 |

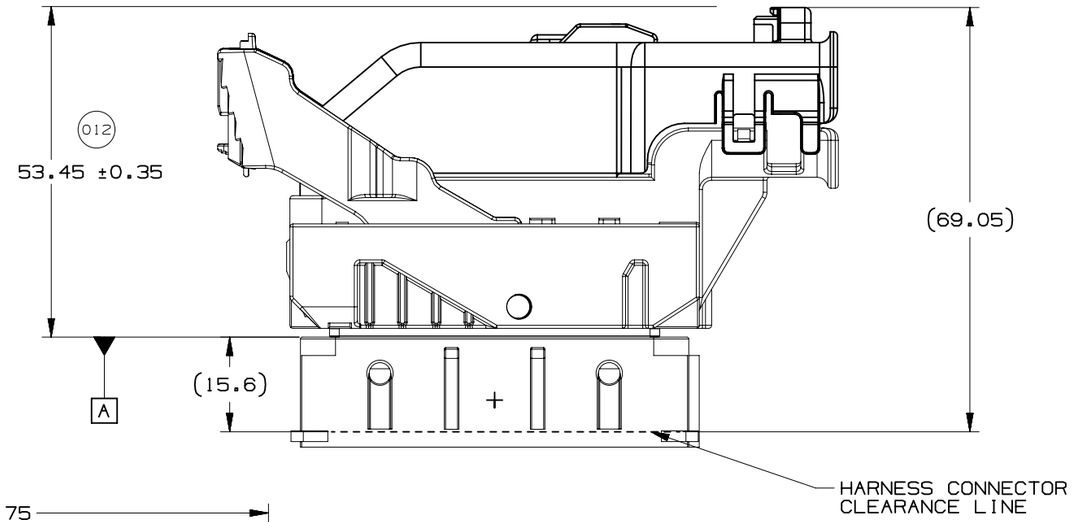


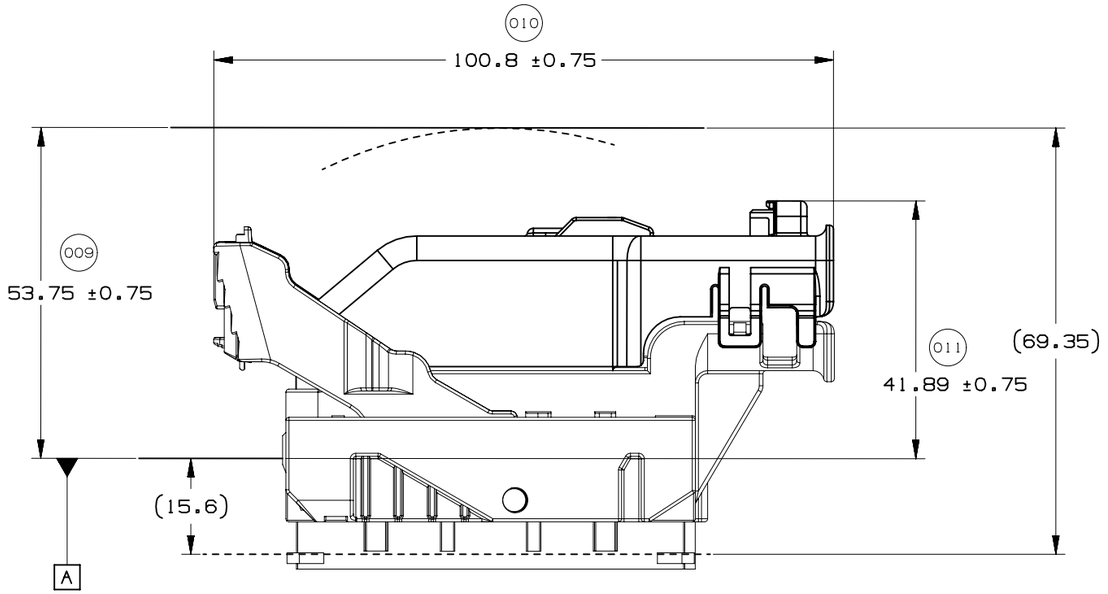


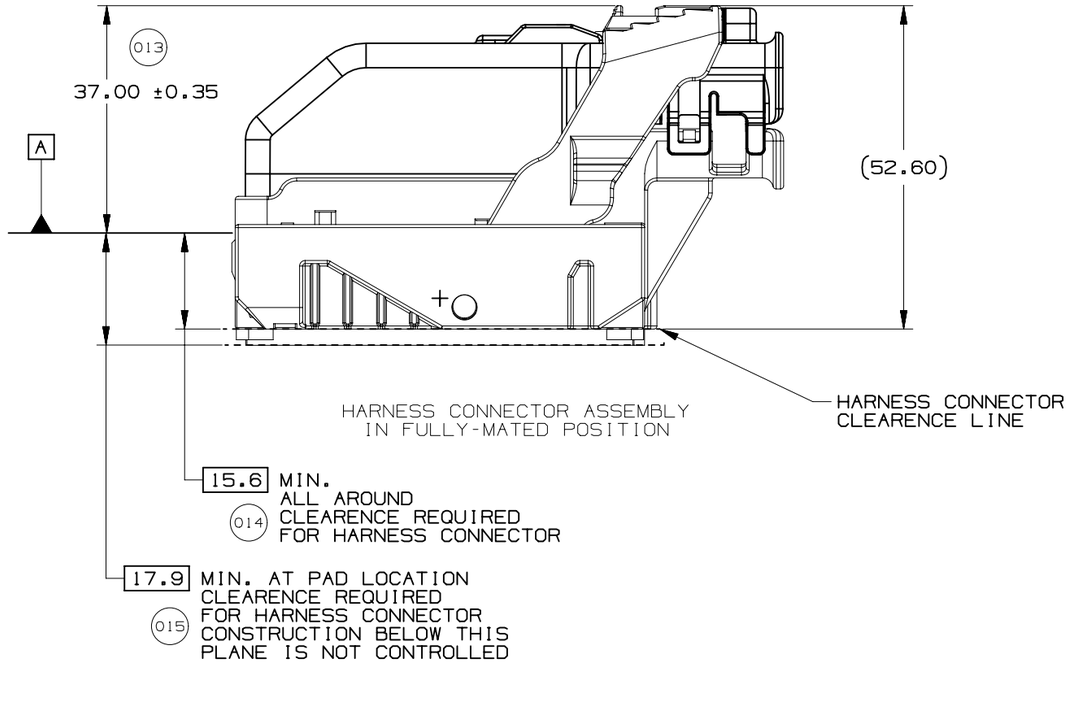


| | | | | | | |
|---|---|---|---|---|---|---|
| | GM | PAGE TITLE<br>LOCATION AND PACKAGING DIMENSIONS<br>REFERENCING INTERFACE DATUM A | | DRAWING NUMBER<br>12672833 | DWG STATUS<br>ST: R / REV: 001 / PDI: | PAGE NUMBER<br>10 OF 22 |

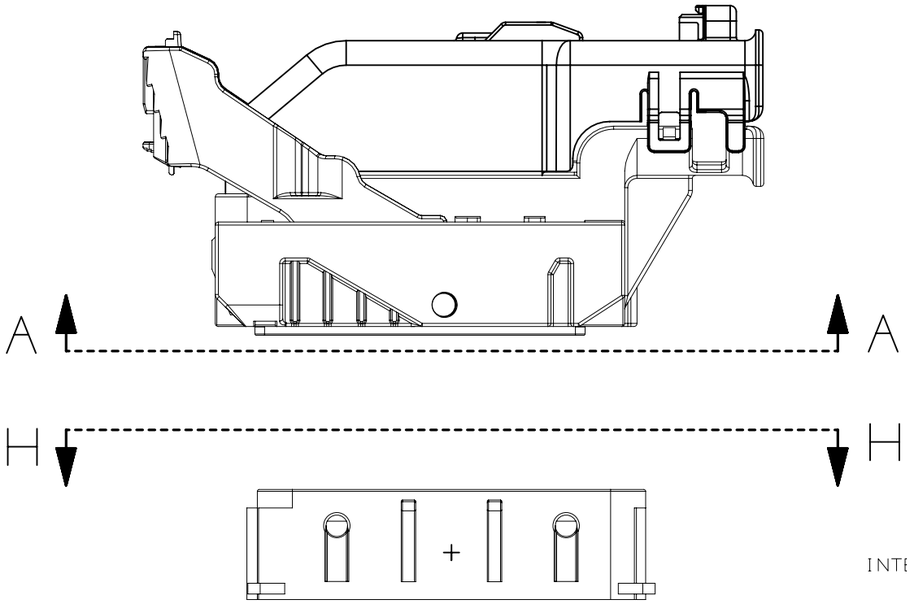


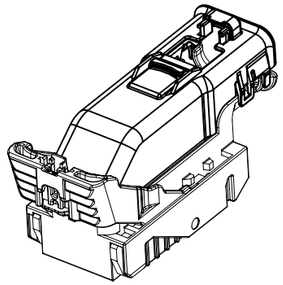

NOTE: REFERENCE THE COMPONENT TABLE
FOR KEY OPTIONS AND CONFIGURATIONS

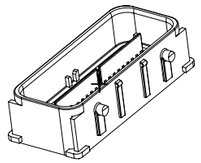

INTERFACE SIDE SHOWN ON ALL SECTION VIEWS

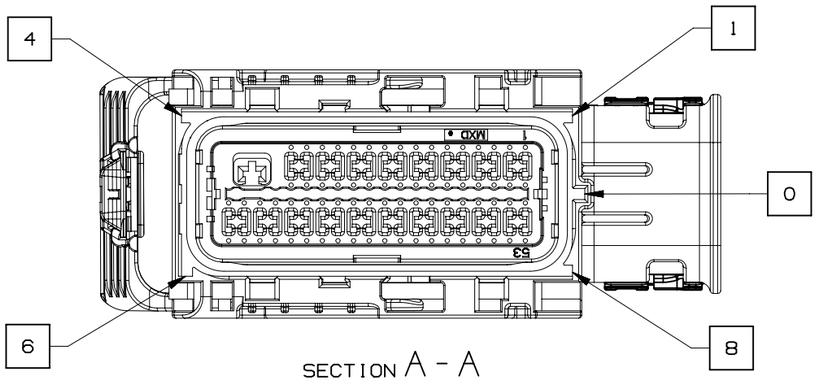


SECTION A - A
73 CKT HARNESS CONNECTOR ASSEMBLY
KEY OPTION B SHOWN

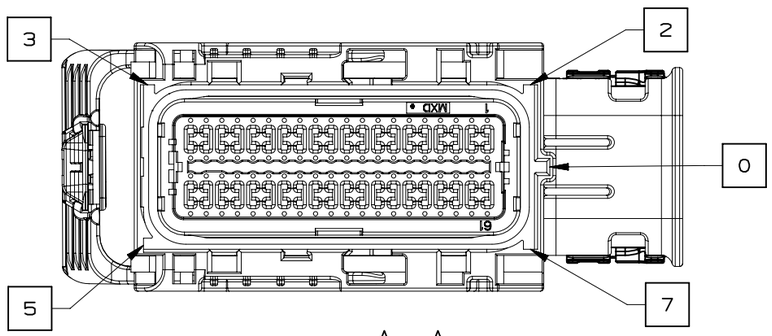


SECTION A - A
80 CKT HARNESS CONNECTOR ASSEMBLY
KEY OPTION K SHOWN

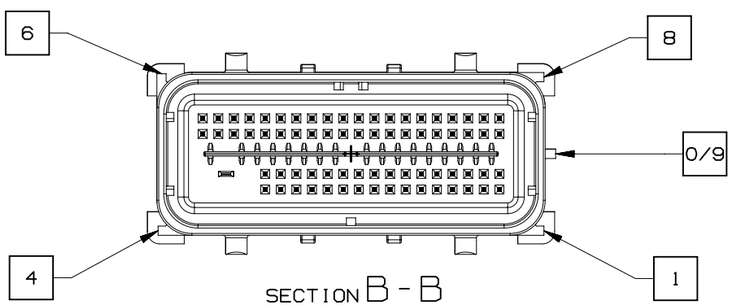


SECTION B - B
73 CKT HARNESS CONNECTOR ASSEMBLY
KEY OPTION B SHOWN

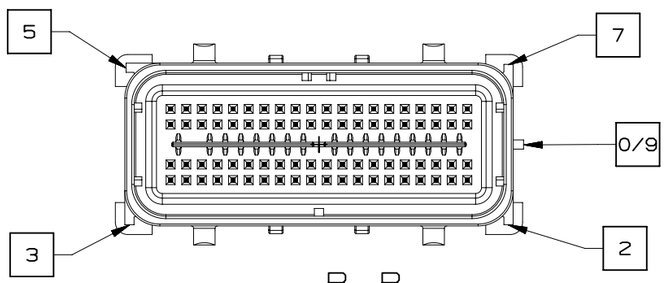


SECTION B - B
80 CKT HARNESS CONNECTOR ASSEMBLY
KEY OPTION K SHOWN

| | | | | | | | |
|---|---|---|---|---|---|---|---|
| | GM | PAGE TITLE: KEY ID REF - WIRE DRESS OPTION 0 | | DRAWING NUMBER: 12672833 | DWG STATUS | | PAGE NUMBER |
| | | | | | ST: R | REV: 001 | PDI: | 11 OF 22 |

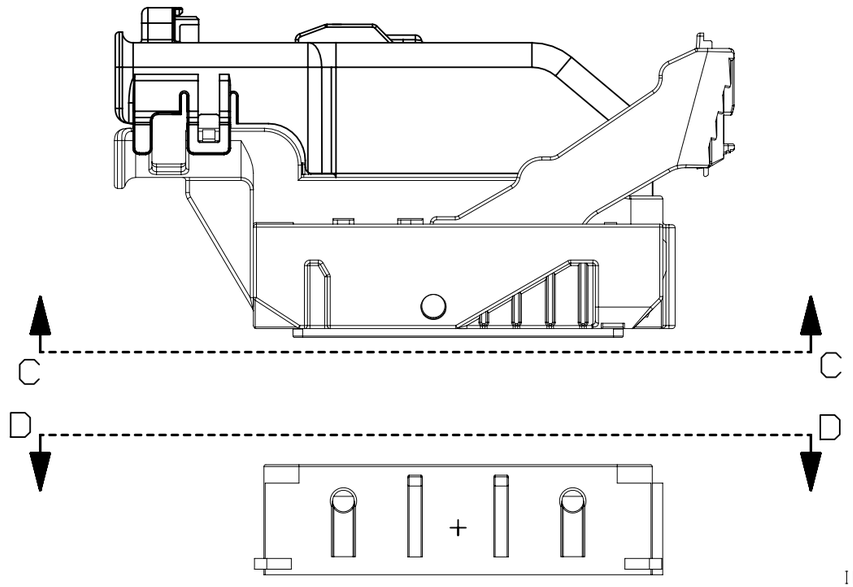


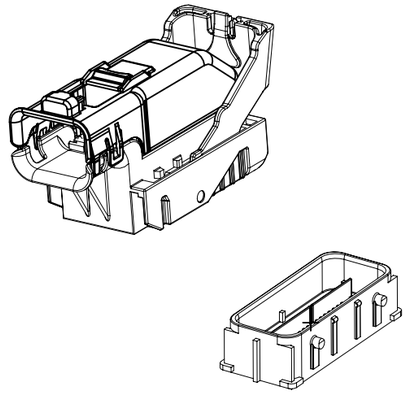

NOTE: REFERENCE THE COMPONENT TABLE
FOR KEY OPTIONS AND CONFIGURATIONS

INTERFACE SIDE SHOWN ON ALL SECTION VIEWS

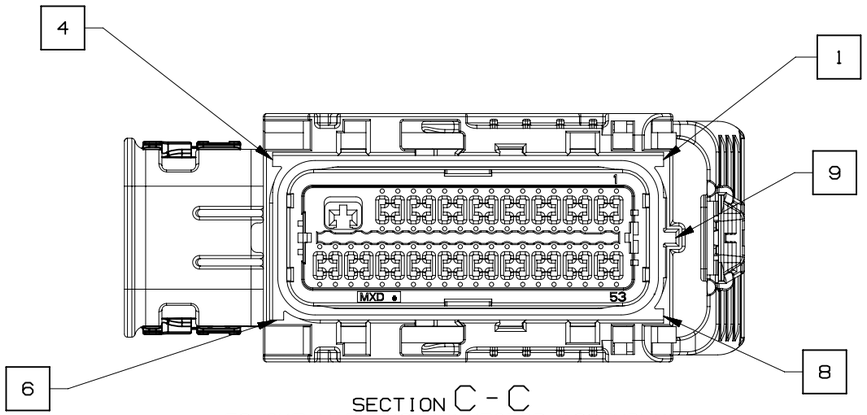


SECTION C - C
73 CKT HARNESS CONNECTOR ASSEMBLY
KEY OPTION B SHOWN

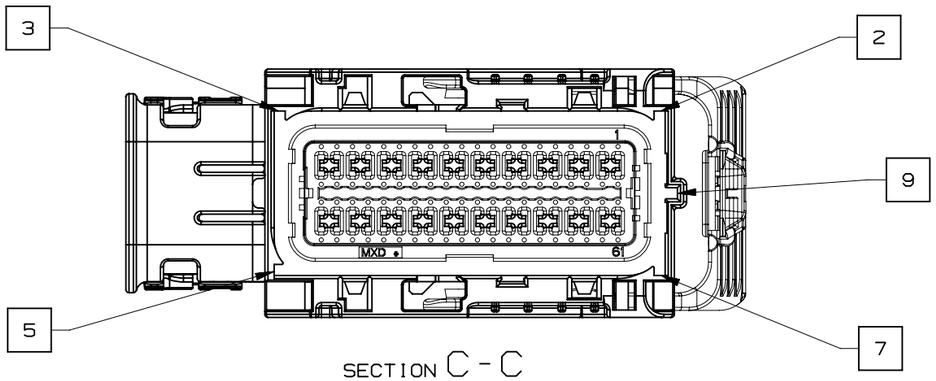


SECTION C - C
80 CKT HARNESS CONNECTOR ASSEMBLY
KEY OPTION K SHOWN

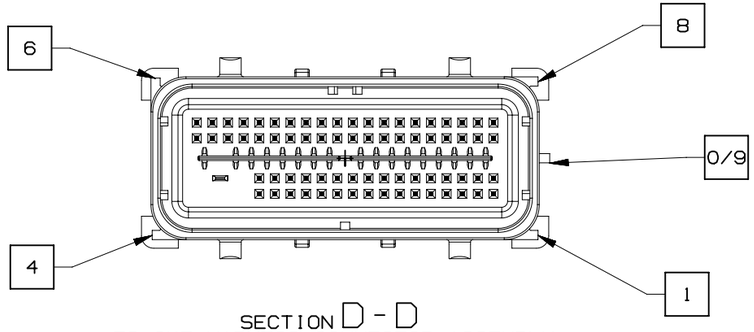


SECTION D - D
73 CKT HARNESS CONNECTOR ASSEMBLY
KEY OPTION B SHOWN

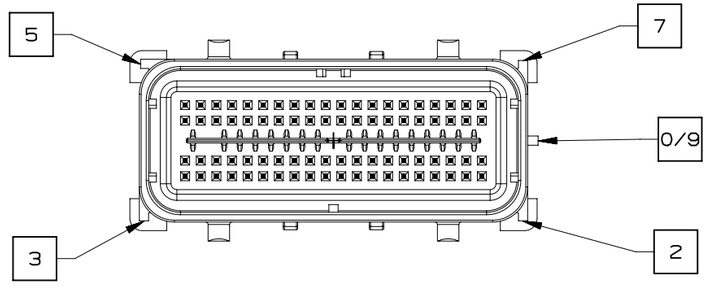


SECTION D - D
80 CKT HARNESS CONNECTOR ASSEMBLY
KEY OPTION K SHOWN

| | | | | | | |
|---|---|---|---|---|---|---|
| | GM | PAGE TITLE: KEY ID REF - WIRE DRESS OPTION 9 | | DRAWING NUMBER: 12672833 | DWG STATUS: ST R / REV 001 / PDI | PAGE NUMBER: 12 OF 22 |

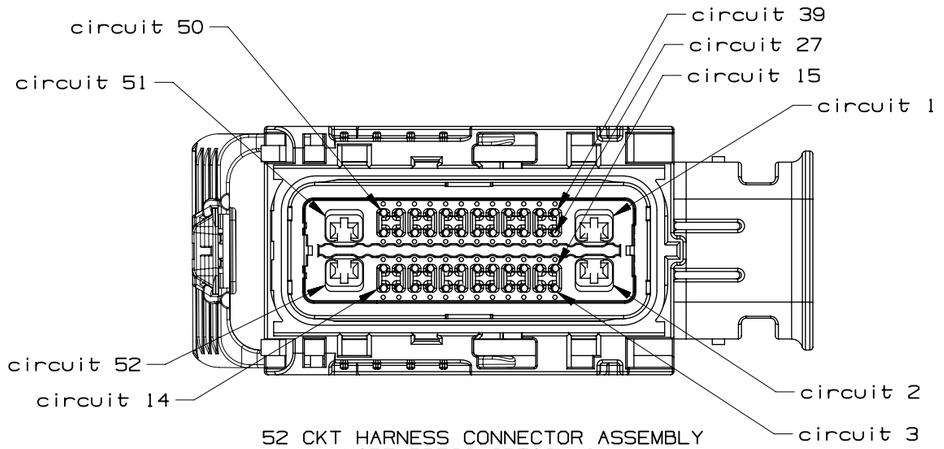


52 CKT HARNESS CONNECTOR ASSEMBLY
WIRE DRESS OPTION 0

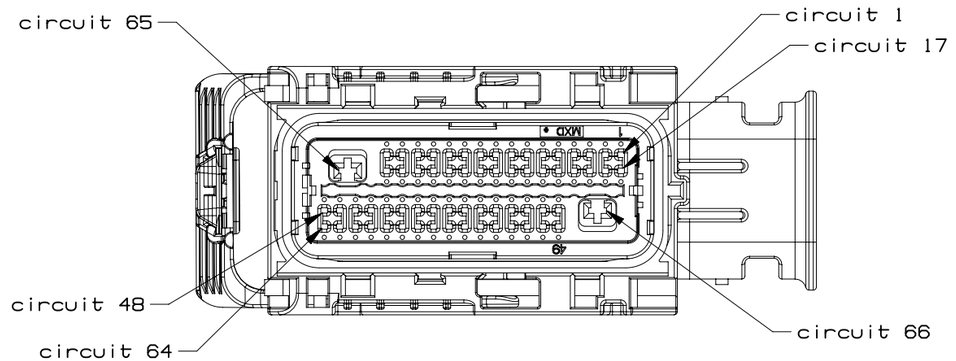


66 CKT HARNESS CONNECTOR ASSEMBLY
WIRE DRESS OPTION 0

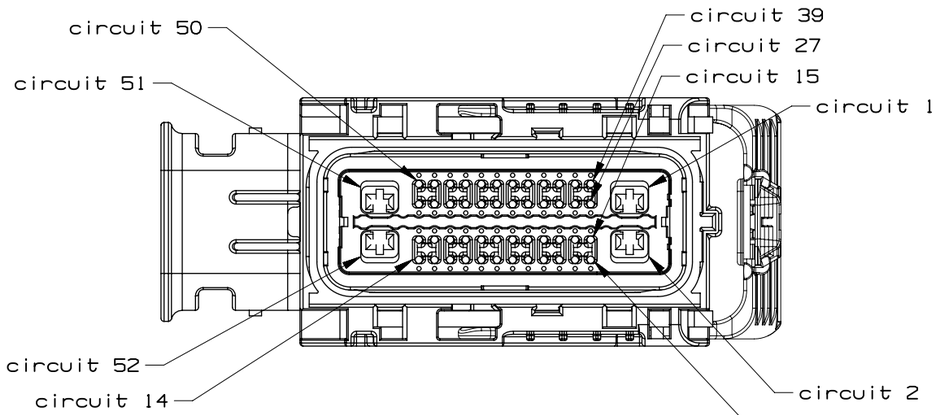


52 CKT HARNESS CONNECTOR ASSEMBLY
WIRE DRESS OPTION 9

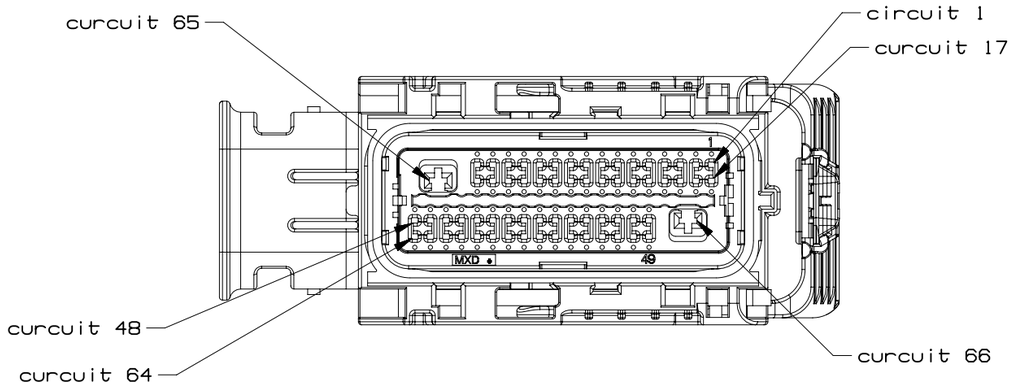


66 CKT HARNESS CONNECTOR ASSEMBLY
WIRE DRESS OPTION 9

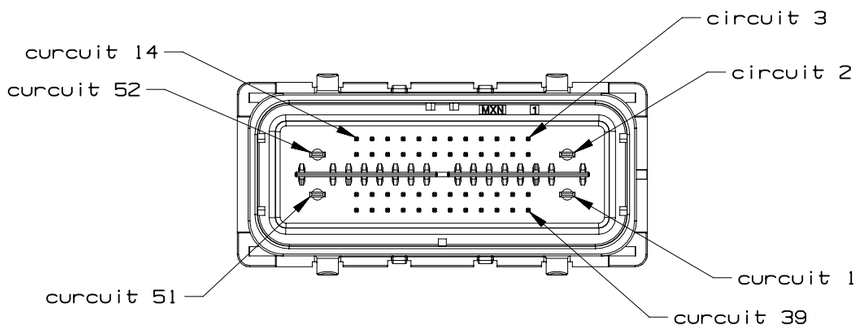


52 CKT COMPONENT CONNECTOR INTERFACE

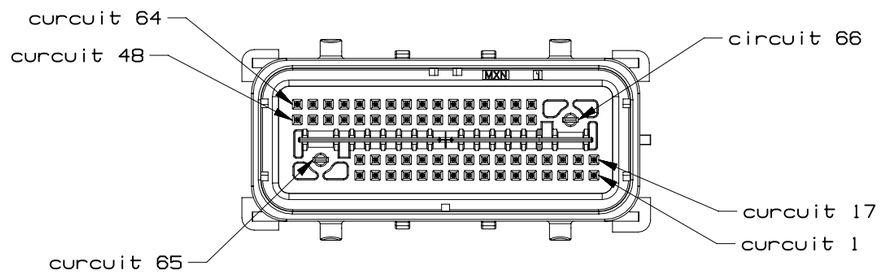


66 CKT COMPONENT CONNECTOR INTERFACE

| | | | | | | | |
|---|---|---|---|---|---|---|---|
| | GM | PAGE TITLE<br>CIRCUIT CONFIGURATIONS | | DRAWING NUMBER<br>12672833 | DWG STATUS<br>ST: R / REV: 001 / PDI: | | PAGE NUMBER<br>13 OF 22 |

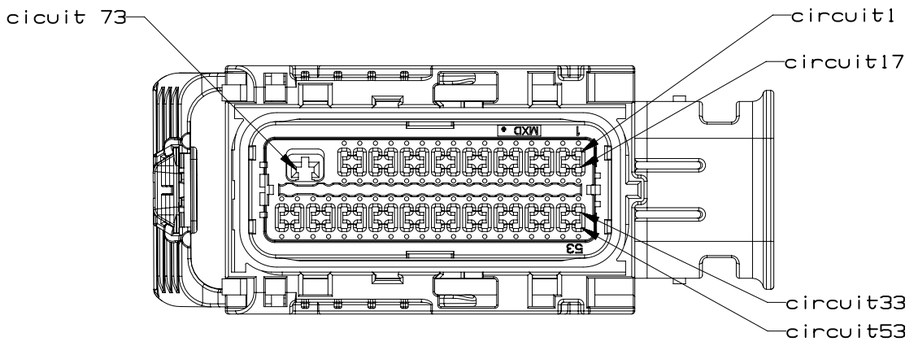


73 CKT HARNESS CONNECTOR ASSEMBLY
WIRE DRESS OPTION 0

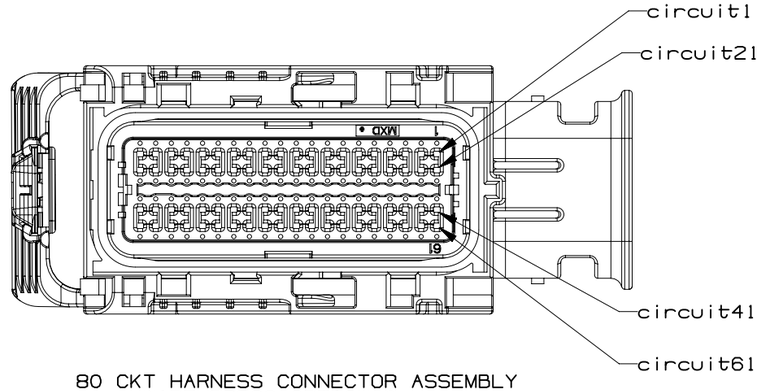


80 CKT HARNESS CONNECTOR ASSEMBLY
WIRE DRESS OPTION 0

INTERFACE SIDE SHOWN ON ALL VIEWS

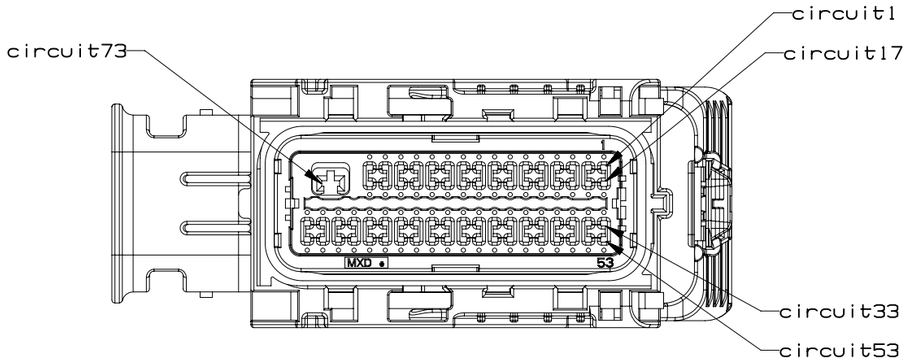


73 CKT HARNESS CONNECTOR ASSEMBLY
WIRE DRESS OPTION 9

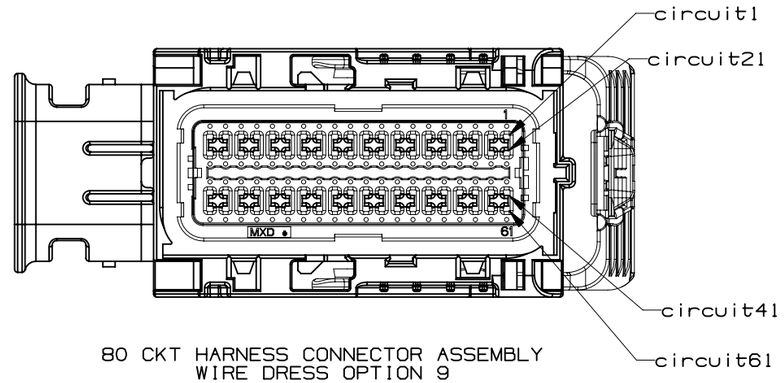


80 CKT HARNESS CONNECTOR ASSEMBLY
WIRE DRESS OPTION 9

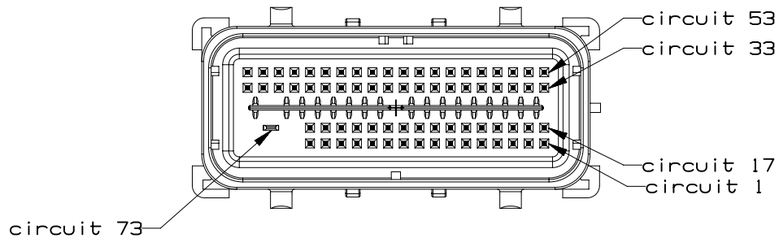


73 CKT COMPONENT CONNECTOR INTERFACE

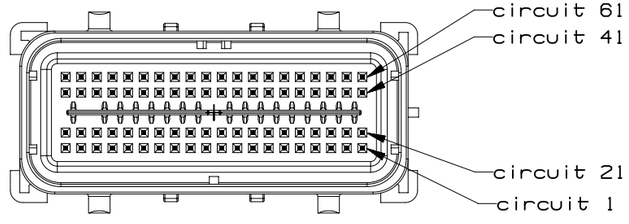


80 CKT COMPONENT CONNECTOR INTERFACE

| | | | | | | | |
|---|---|---|---|---|---|---|---|
| | GM | PAGE TITLE: CIRCUIT CONFIGURATIONS | | DRAWING NUMBER: 12672833 | DWG STATUS: ST R | REV 001 | PDI | PAGE NUMBER: 14 OF 22 |

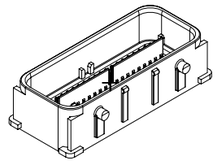

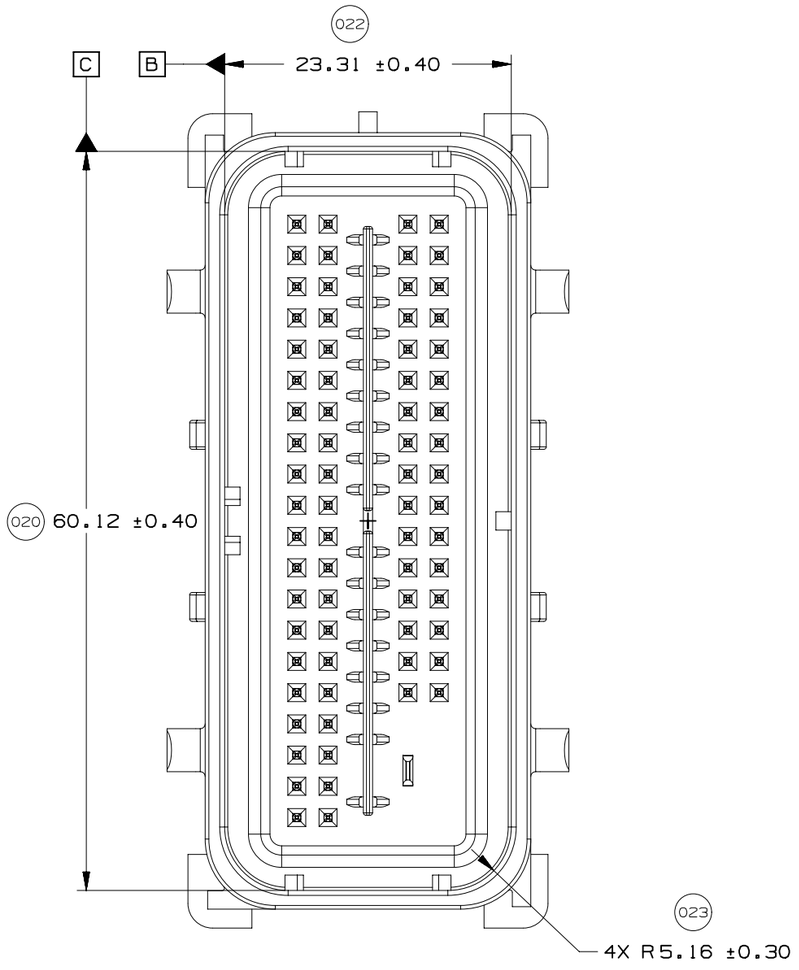


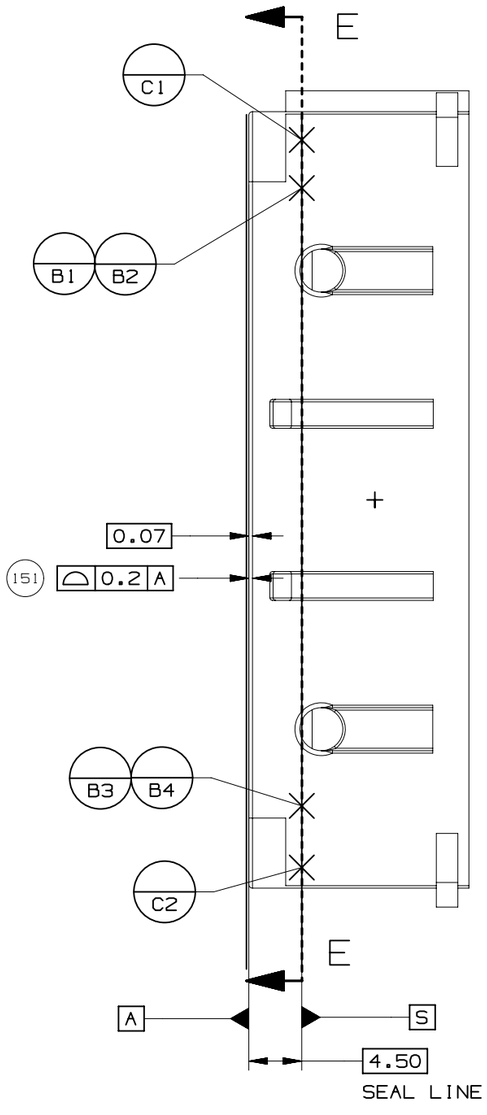


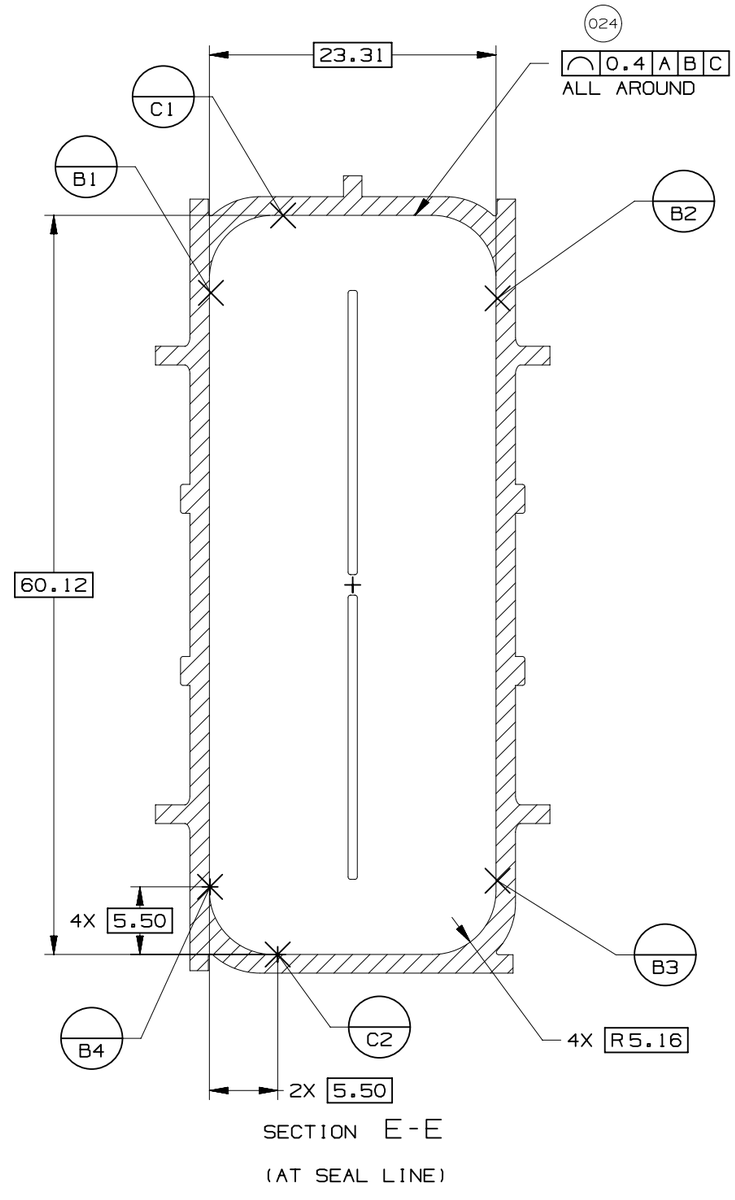


UNLESS SPECIFIED, TOLERANCE OF THE COMPONENT CONNECTOR INTERFACE TO BE 0.13 A B C

| | | | | | | | |
|---|---|---|---|---|---|---|---|
| | GM | PAGE TITLE: COMPONENT CONNECTOR INTERFACE | | DRAWING NUMBER: 12672833 | DWG STATUS ST: R | REV: 001 | PDI: | PAGE NUMBER: 15 OF 22 |

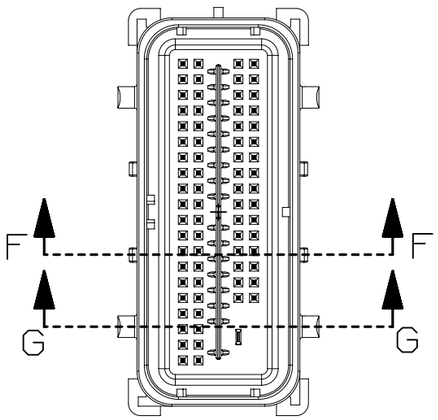


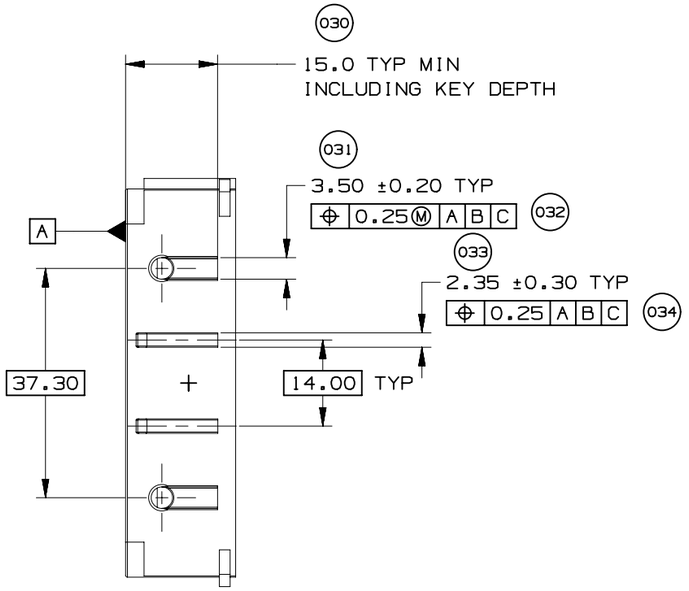


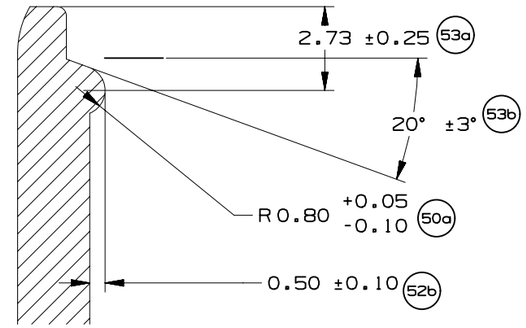


VIEW YY
SCALE 5:1

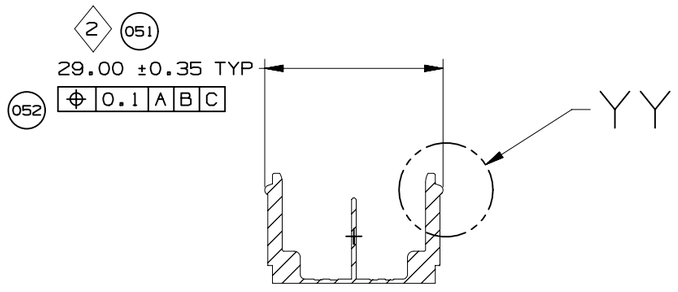


SECTION F-F
(RELEASE FEATURE)

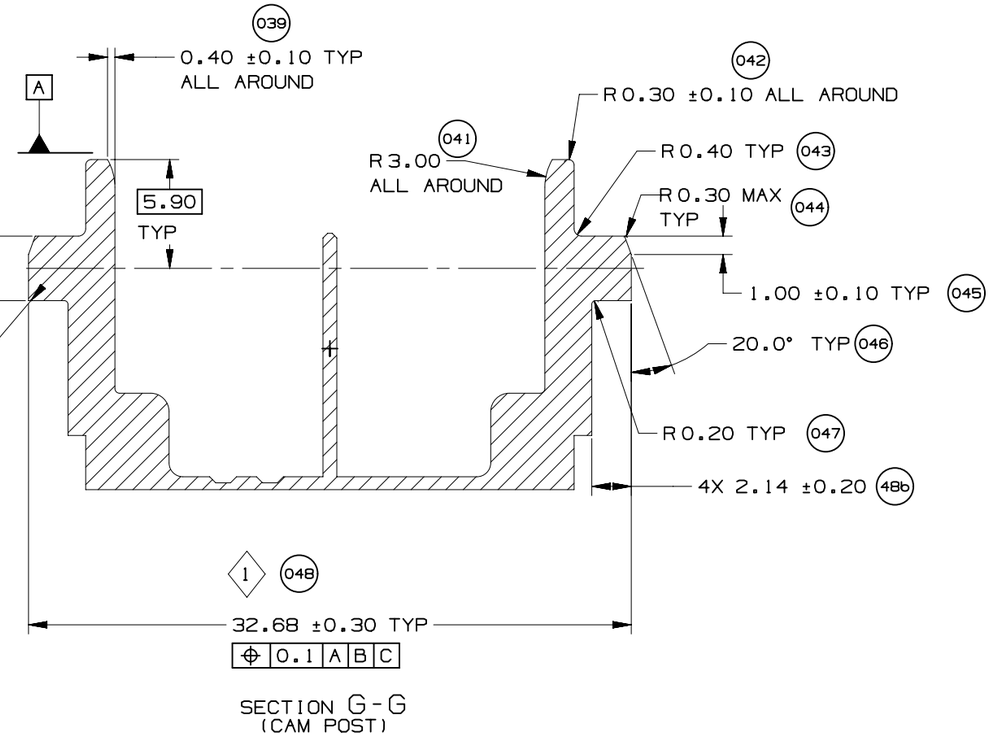


SECTION G-G
(CAM POST)

| | | | | | | |
|---|---|---|---|---|---|---|
| | GM | PAGE TITLE<br>COMPONENT CONNECTOR INTERFACE | | DRAWING NUMBER<br>12672833 | DWG STATUS<br>ST: R / REV: 001 / PDI: | PAGE NUMBER<br>16 OF 22 |

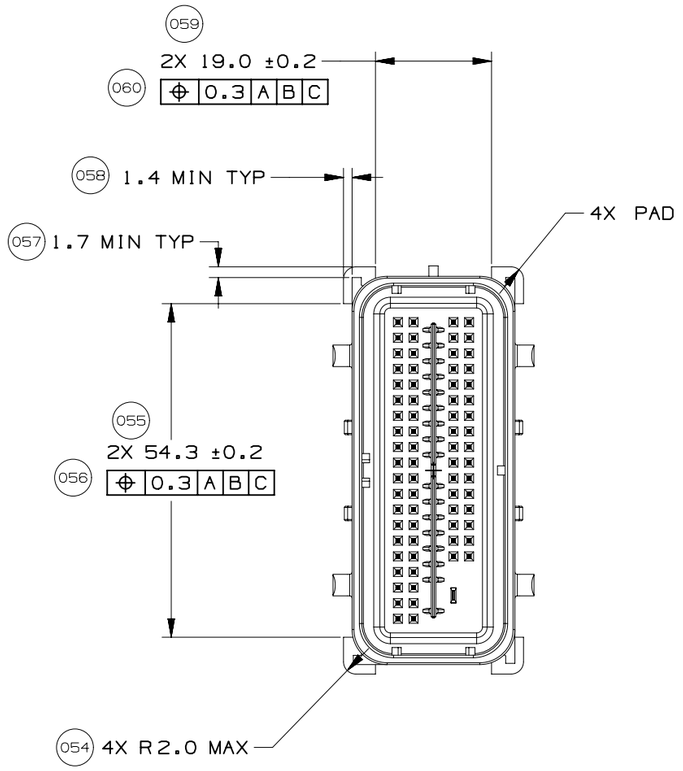


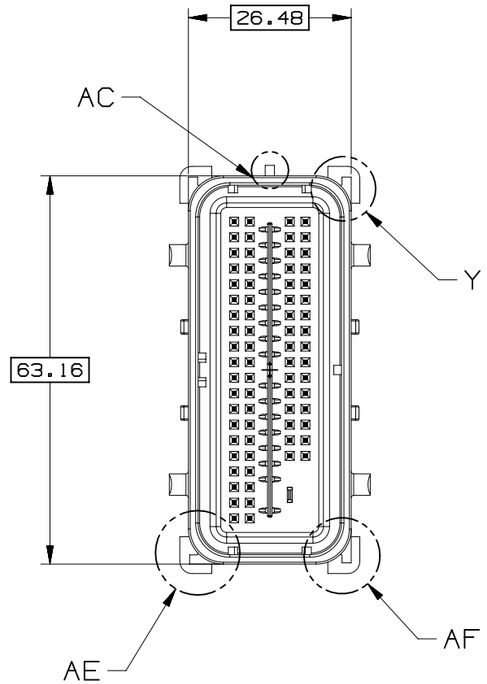


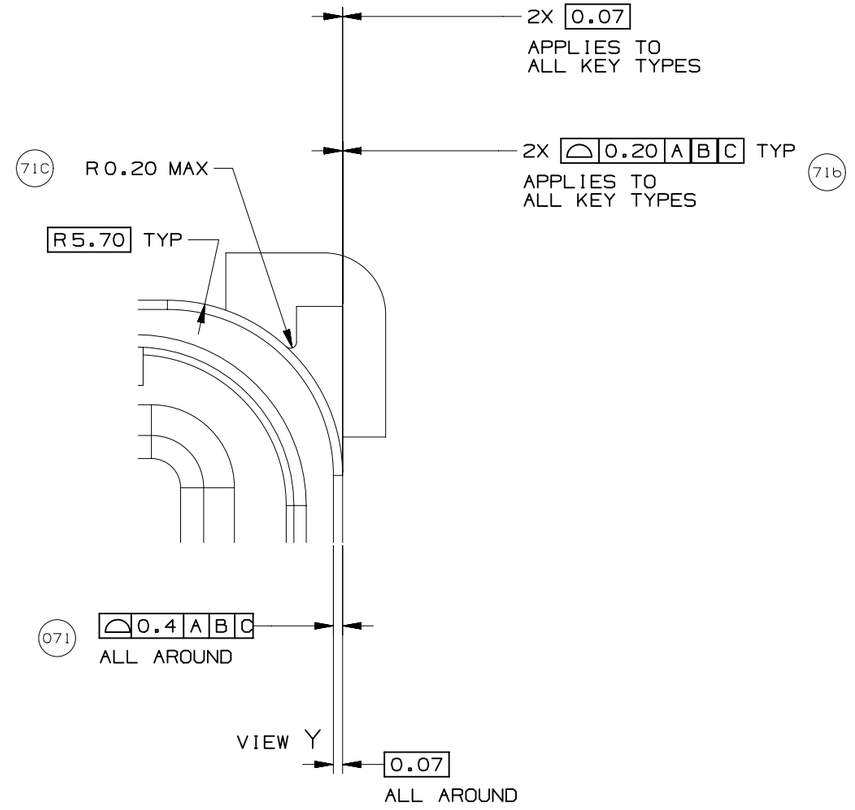


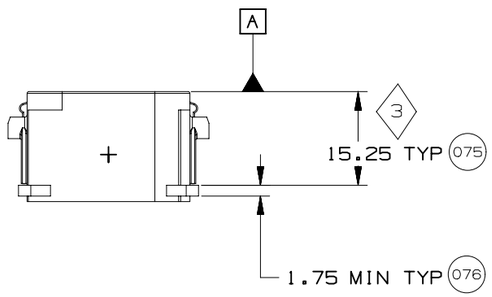


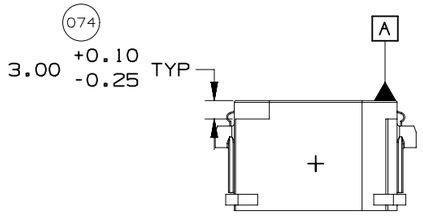


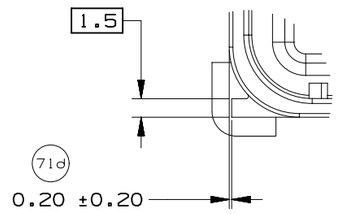


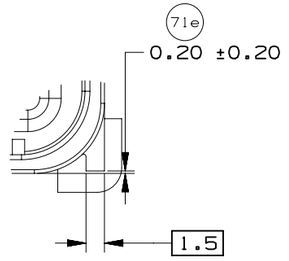


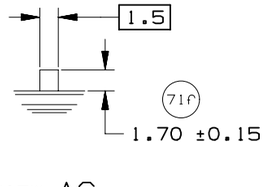


| | | | | | | |
|---|---|---|---|---|---|---|
| GM | PAGE TITLE: COMPONENT CONNECTOR INTERFACE | | DRAWING NUMBER: 12672833 | DWG STATUS ST: R | REV: 001 | PDI: | PAGE NUMBER: 17 OF 22 |

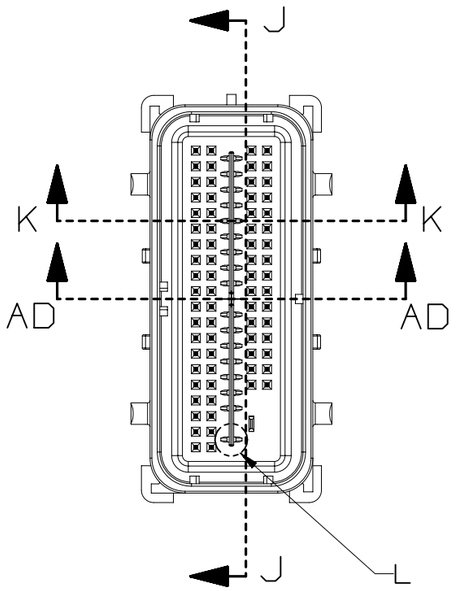


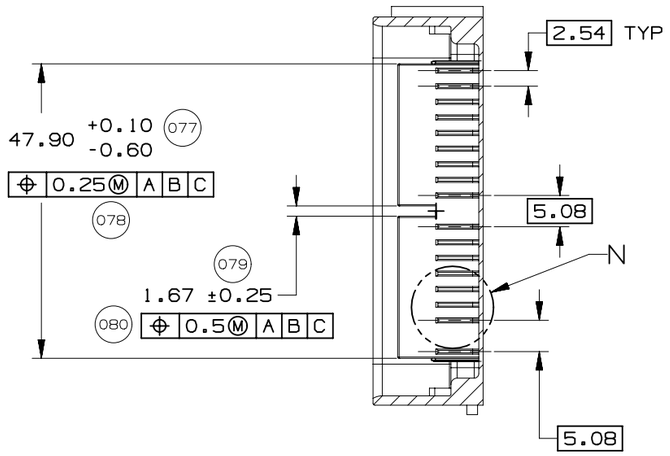


SECTION J-J

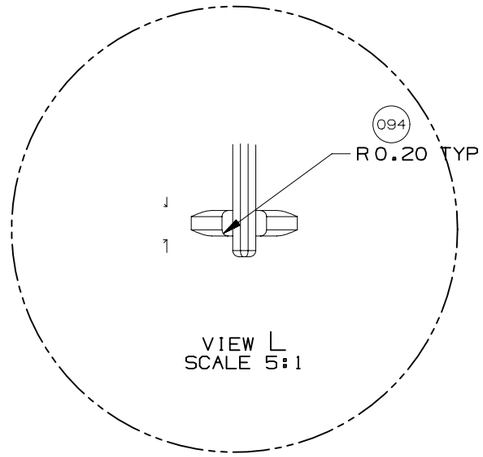


VIEW L
SCALE 5:1

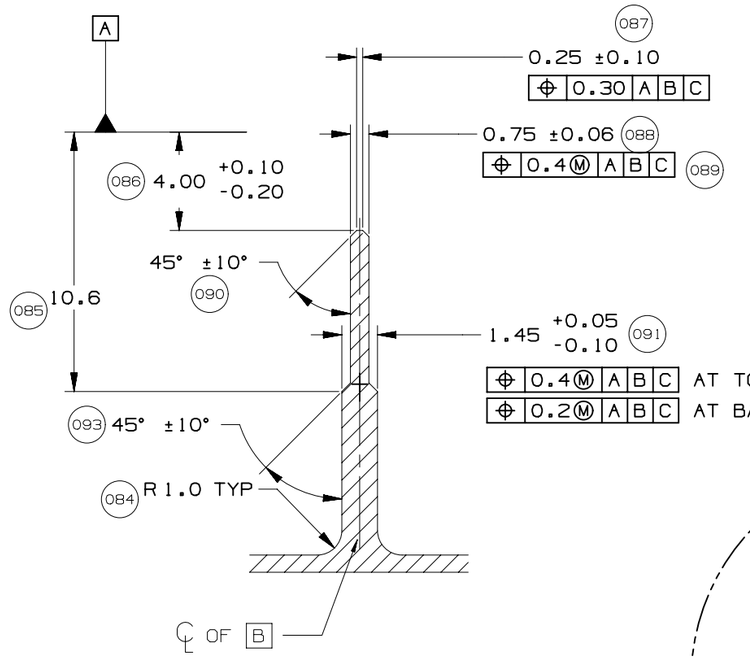


DETAIL M
TYPICAL
SCALE 4:1

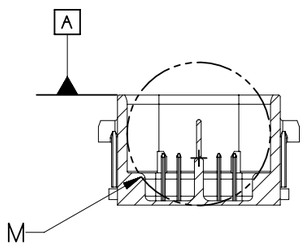


SECTION K-K

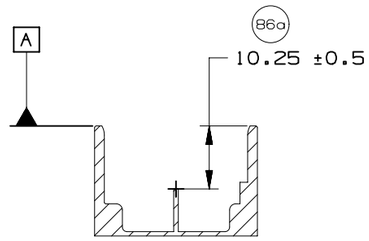


SECTION AD-AD

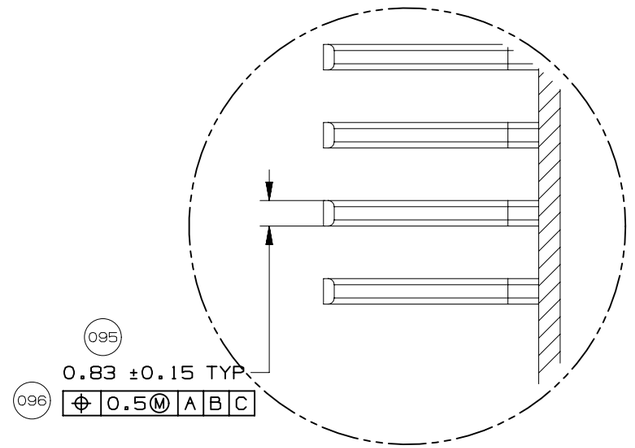


DETAIL N
SCALE 5:1

| | | | | | | | |
|---|---|---|---|---|---|---|---|
| | GM | PAGE TITLE: COMPONENT CONNECTOR INTERFACE | | DRAWING NUMBER: 12672833 | DWG STATUS: ST R / REV 001 / PDI | | PAGE NUMBER: 18 OF 22 |

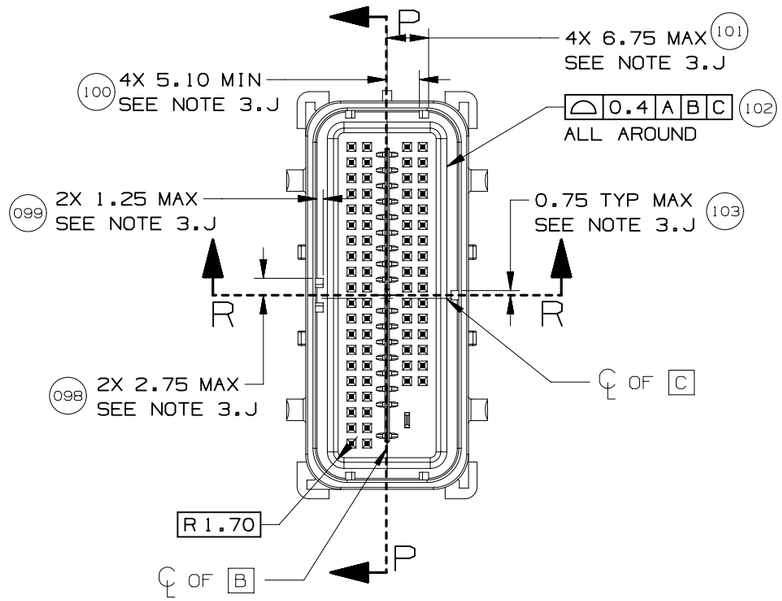


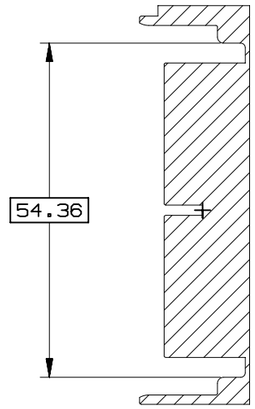


SECTION P-P

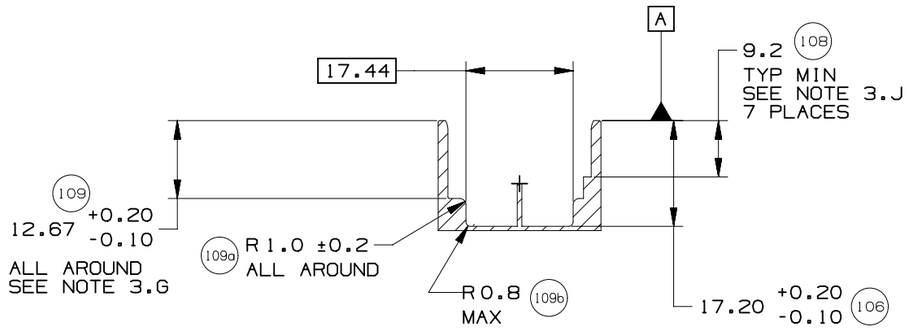


SECTION R-R

| | | | | | | | |
|---|---|---|---|---|---|---|---|
| | GM | PAGE TITLE<br>COMPONENT CONNECTOR INTERFACE | | DRAWING NUMBER<br>12672833 | DWG STATUS<br>ST: R / REV: 001 / PDI: | PAGE NUMBER<br>19 OF 22 | |

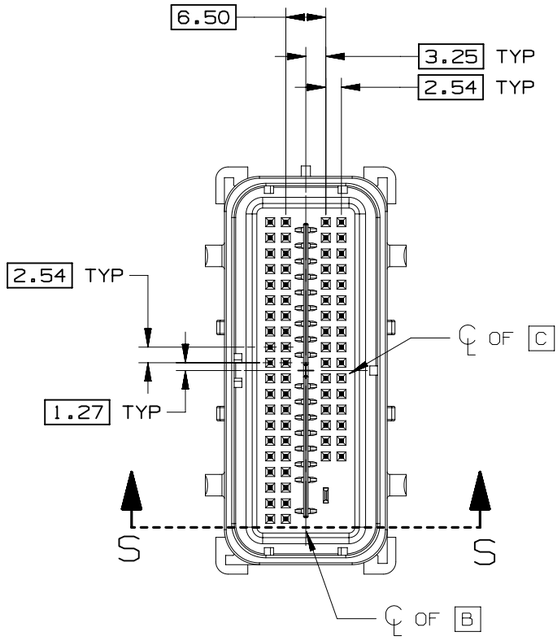


SECTION S-S




DETAIL T
TYPICAL
SCALE 5:1

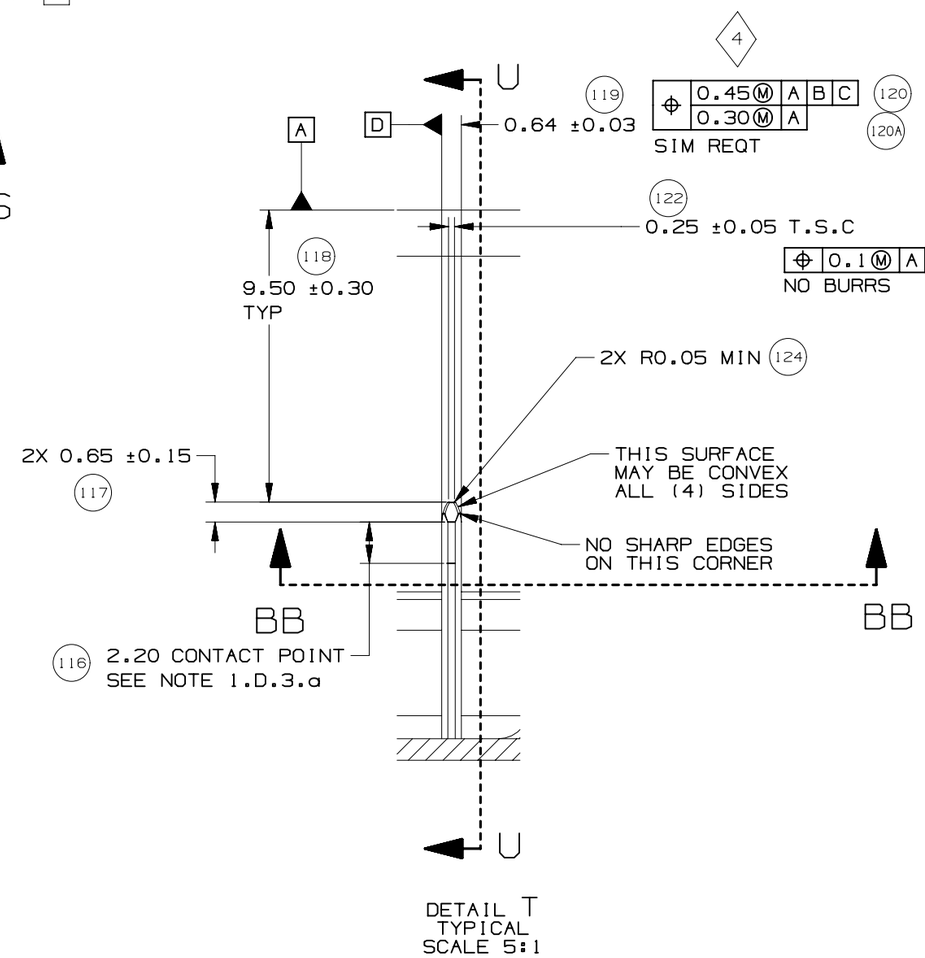


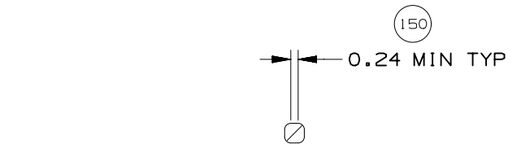


SECTION BB-BB

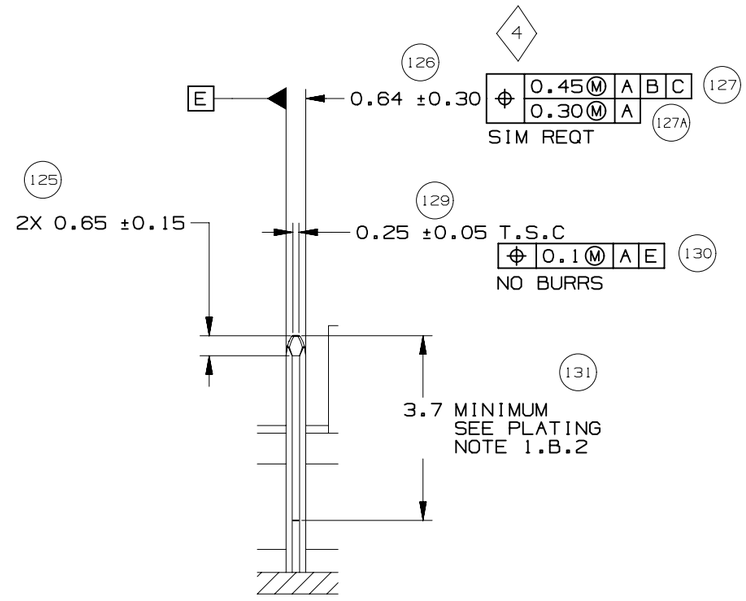


SECTION U-U
TYPICAL

| | | | | | | |
|---|---|---|---|---|---|---|
| GM | PAGE TITLE: COMPONENT CONNECTOR INTERFACE | | DRAWING NUMBER: 12672833 | DWG STATUS ST: R | REV: 001 | PDI: | PAGE NUMBER: 20 OF 22 |

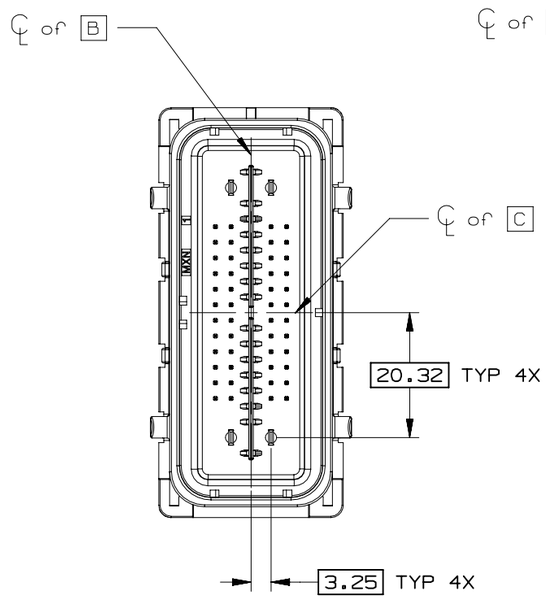


52 CKT COMPONENT
CONNECTOR INTERFACE

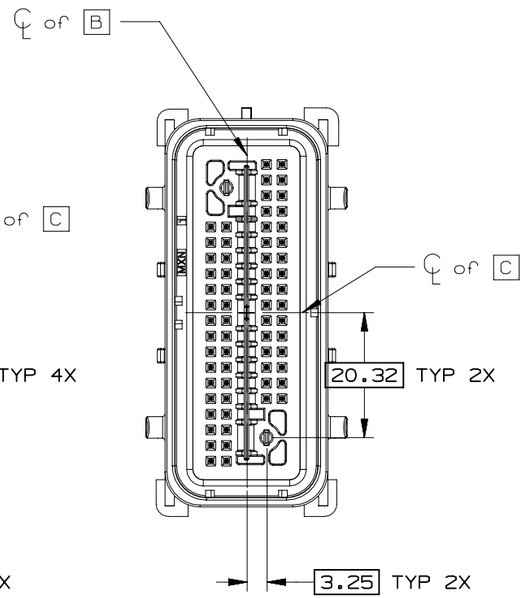


66 CKT COMPONENT
CONNECTOR INTERFACE

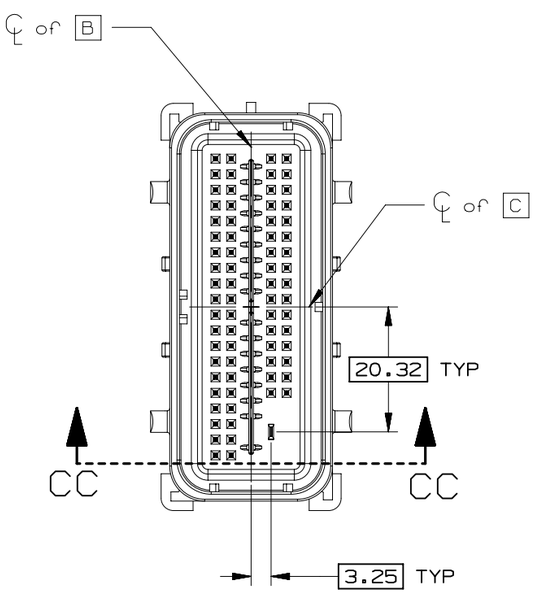


73 CKT COMPONENT
CONNECTOR INTERFACE

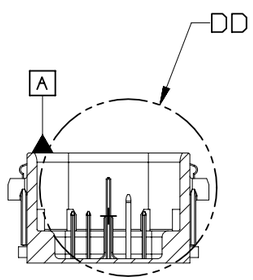


SECTION CC-CC

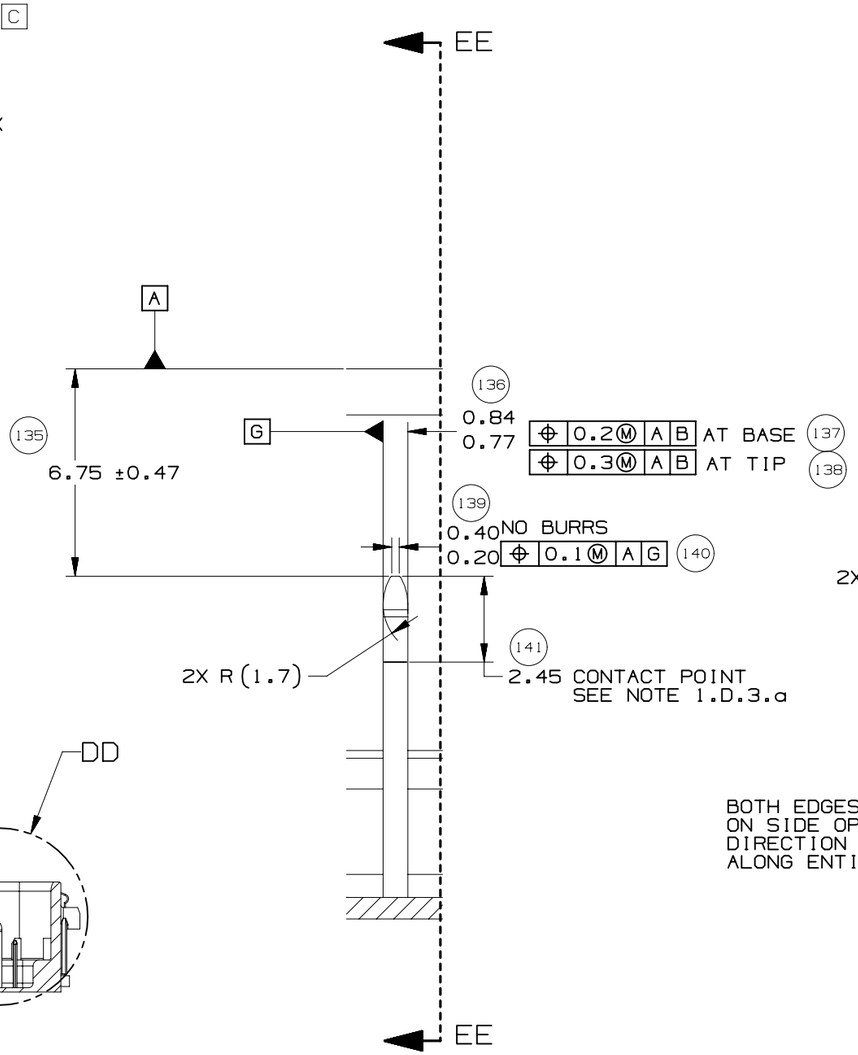


DETAIL DD
TYPICAL
SCALE 5:1

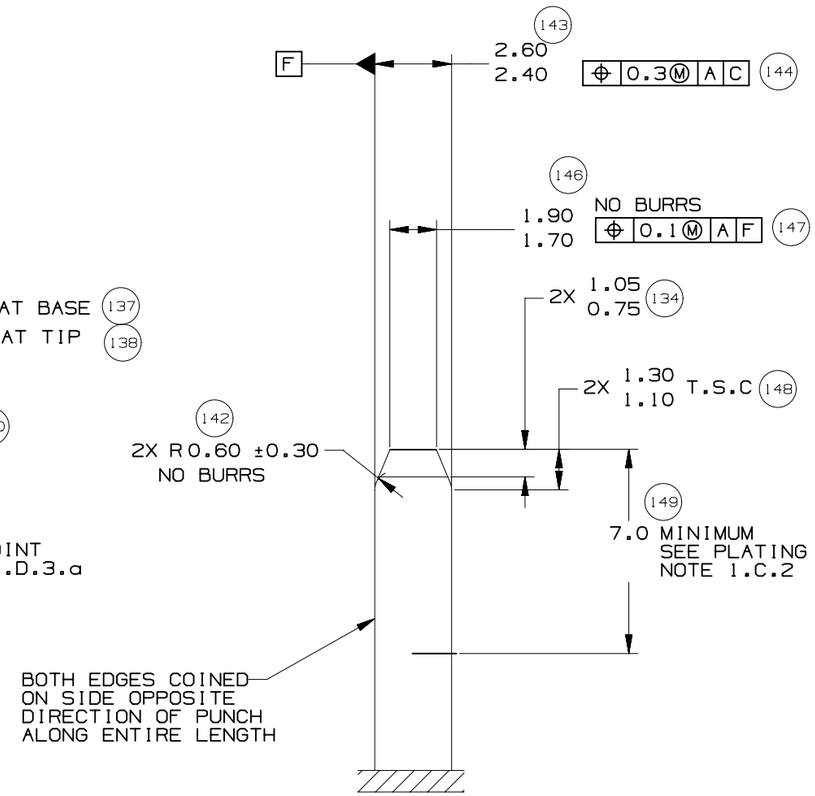


SECTION EE-EE
TYPICAL

| | | | | | | | |
|---|---|---|---|---|---|---|---|
| | GM | PAGE TITLE: COMPONENT CONNECTOR INTERFACE | | DRAWING NUMBER: 12672833 | DWG STATUS ST: R | REV: 001 | PDI: | PAGE NUMBER: 21 OF 22 |

| MOLEX MX64 RECEPTACLE TERMINAL INFORMATION | | | | | | | |
|---|---|---|---|---|---|---|---|
| ITEM | MOLEX P/N | GM P/N | WIRE SIZE MM2 | TYPE | PLATING | REEL WIND DIRECTION | COMMENTS |
| 1 | 34736-0025 | | 0.35 | ISO | SILVER | LEFT | |
| 2 | 34736-0026 | 12672850 | 0.35 | ISO | SILVER | RIGHT | |
| 3 | 34736-0027 | | 0.5 / 0.75 | ISO | SILVER | LEFT | |
| 4 | 34736-0028 | 12672851 | 0.5 / 0.75 | ISO | SILVER | RIGHT | |

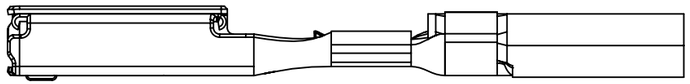

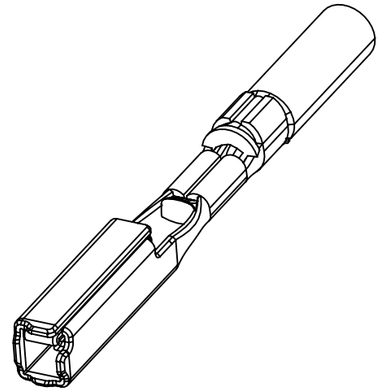

| CAVITY PLUGS | | | | | | | | | |
|---|---|---|---|---|---|---|---|---|---|
| ITEM | MFG | MFG P/N | GM P/N RD | SIZE | COLOR | MFG DRAWING | PROD SPEC | APP SPEC | COMMENTS |
| 1 | MOLEX | 34586-0001 | 12674820 | 0.64 | NATURAL | SD-34586-001 | PS-34566-0000 | AS-34566-001 | |
| 2 | YAZAKI | 7158-3114-90 | 12674821 | 2.8 | BLUE | 7158-3114-90 | YPES-11-04-062 | YPES-15-299 | |

ITEM 1

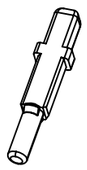

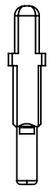

ITEM 2

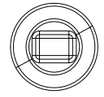

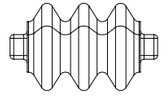

| | | | | | | | | |
|---|---|---|---|---|---|---|---|---|
| | GM | PAGE TITLE: ADDITIONAL COMPONENTS REQUIRED | | DRAWING NUMBER: 12672833 | DWG STATUS ST: R | REV: 001 | PDI: | PAGE NUMBER: 22 OF 22 |

molex

MX123 SEALED RCPT ASSY (73 Ckt)
BOM & PIN OUT SHEET

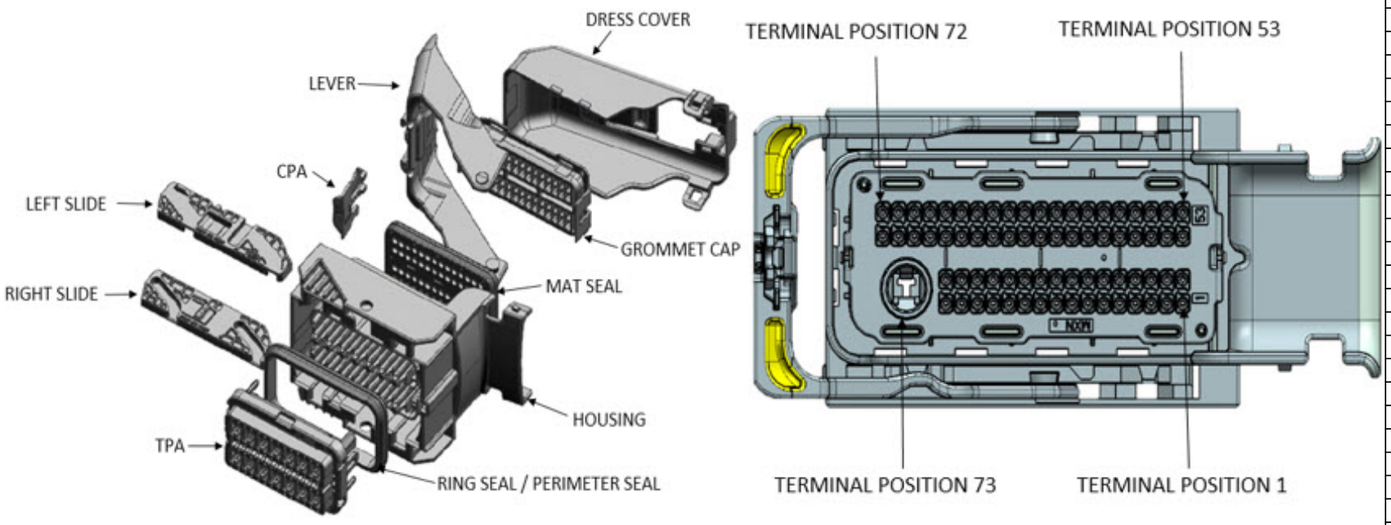





| ABBREVIATION | DESCRIPTION | COLOR | MATERIAL |
|---|---|---|---|
| G-CAP-0-P | GROMMET CAP OPTION 0 PLUGGED | BLACK | SPS/PA, G.F 30% |
| G-CAP-0-O | GROMMET CAP OPTION 0 All OPEN | BLACK | SPS/PA, G.F 30% |
| G-CAP-9-P | GROMMET CAP OPTION 9 PLUGGED | BLACK | SPS/PA, G.F 30% |
| G-CAP-9-O | GROMMET CAP OPTION 9 All OPEN | BLACK | SPS/PA, G.F 30% |
| C-HSG-A0 | CONNECTOR HOUSING KEY A - WDC OPT 0 | BLACK | SPS/PA, G.F 30% |
| C-HSG-B0 | CONNECTOR HOUSING KEY B- WDC OPT 0 | BLACK | SPS/PA, G.F 30% |
| C-HSG-C0 | CONNECTOR HOUSING KEY C- WDC OPT 0 | BLACK | SPS/PA, G.F 30% |
| C-HSG-D0 | CONNECTOR HOUSING KEY D - WDC OPT 0 | BLACK | SPS/PA, G.F 30% |
| C-HSG-E0 | CONNECTOR HOUSING KEY E - WDC OPT 0 | BLACK | SPS/PA, G.F 30% |
| C-HSG-F0 | CONNECTOR HOUSING KEY F- WDC OPT 0 | BLACK | SPS/PA, G.F 30% |
| C-HSG-A9 | CONNECTOR HOUSING KEY A- WDC OPT 9 | BLACK | SPS/PA, G.F 30% |
| C-HSG-B9 | CONNECTOR HOUSING KEY B- WDC OPT 9 | BLACK | SPS/PA, G.F 30% |
| C-HSG-C9 | CONNECTOR HOUSING KEY C- WDC OPT 9 | BLACK | SPS/PA, G.F 30% |
| C-HSG-D9 | CONNECTOR HOUSING KEY D- WDC OPT 9 | BLACK | SPS/PA, G.F 30% |
| C-HSG-E9 | CONNECTOR HOUSING KEY E- WDC OPT 9 | BLACK | SPS/PA, G.F 30% |
| C-HSG-F9 | CONNECTOR HOUSING KEY F- WDC OPT 9 | BLACK | SPS/PA, G.F 30% |
| TPA-A0 | TERMINAL POSITION ASSURANCE (TPA) OPTION 0 | BLACK | SPS/PA, G.F 30% |
| TPA-B0 | TERMINAL POSITION ASSURANCE (TPA) OPTION 0 | STONE GRAY | SPS/PA, G.F 30% |
| TPA-C0 | TERMINAL POSITION ASSURANCE (TPA) OPTION 0 | BLUE | SPS/PA, G.F 30% |
| TPA-D0 | TERMINAL POSITION ASSURANCE (TPA) OPTION 0 | BROWN | SPS/PA, G.F 30% |
| TPA-E0 | TERMINAL POSITION ASSURANCE (TPA) OPTION 0 | GREEN | SPS/PA, G.F 30% |
| TPA-F0 | TERMINAL POSITION ASSURANCE (TPA) OPTION 0 | NATURAL | SPS/PA, G.F 30% |
| TPA-A0-1 | TERMINAL POSITION ASSURANCE (TPA) OPTION 0 | BLACK | SPS/PA, G.F 30% |
| TPA-B0-1 | TERMINAL POSITION ASSURANCE (TPA) OPTION 0 | STONE GRAY | SPS/PA, G.F 30% |
| TPA-C0-1 | TERMINAL POSITION ASSURANCE (TPA) OPTION 0 | BLUE | SPS/PA, G.F 30% |
| TPA-A9 | TERMINAL POSITION ASSURANCE (TPA) OPTION 9 | BLACK | SPS/PA, G.F 30% |
| TPA-B9 | TERMINAL POSITION ASSURANCE (TPA) OPTION 9 | STONE GRAY | SPS/PA, G.F 30% |
| TPA-C9 | TERMINAL POSITION ASSURANCE (TPA) OPTION 9 | BLUE | SPS/PA, G.F 30% |
| TPA-D9 | TERMINAL POSITION ASSURANCE (TPA) OPTION 9 | BROWN | SPS/PA, G.F 30% |
| TPA-E9 | TERMINAL POSITION ASSURANCE (TPA) OPTION 9 | GREEN | SPS/PA, G.F 30% |
| TPA-F9 | TERMINAL POSITION ASSURANCE (TPA) OPTION 9 | NATURAL | SPS/PA, G.F 30% |
| MAL | MATE ASSIST LEVER | BLACK | SPS/NYLON GF30 |
| RS | SLIDE - RIGHT | BLACK | PBT W/PTFE, G.F. 30% |
| LS | SLIDE - LEFT | BLACK | PBT W/PTFE, G.F. 30% |
| CVR BLACK | DRESS COVER BLACK | BLACK | PBT, G.F. 30% |
| CVR GRAY | DRESS COVER GRAY | GRAY | PBT, G.F. 30% |
| CVR BLUE | DRESS COVER BLUE | BLUE | PBT, G.F. 30% |
| CVR BROWN | DRESS COVER BROWN | BROWN | PBT, G.F. 30% |
| CVR GREEN | DRESS COVER GREEN | GREEN | PBT, G.F. 30% |
| CVR NATURAL | DRESS COVER NATURAL | NATURAL | PBT, G.F. 30% |
| CVR YELLOW | DRESS COVER YELLOW | YELLOW | PBT, G.F. 30% |
| CPA | CONNECTOR POSITION ASSURANCE (CPA) | RED | PPE/PA 10% GF |
| MSEAL | MAT SEAL | RUST RED | INHERENTLY LUBRICATED SILICONE RUBBER |
| RSEAL | RING SEAL | RUST RED | INHERENTLY LUBRICATED SILICONE RUBBER |

FOR ADDITIONAL INFOMRATION SEE SD-34566-001

| ASSEMBLY DESCRIPTION | ASSEMBLY PART NUMBER | CONNECTOR HOUSING | GROMMET CAP | TPA | RIGHT SLIDE | LEFT SLIDE | MATE ASSIST LEVER | CPA | MAT SEAL | RING SEAL | BLOCKED TERMINALS<br>CAVITY WITH A NUMBER INDICATES BLOCKED TERMINAL POSITION<br>CAVITY WITHOUT A NUMBER INDICATES OPEN TERMINAL POSITION | STATUS | COMMENTS | INTEGRAL COMPONENTS SOLD SEPARATELY<br>DRESS COVER |
|---|---|---|---|---|---|---|---|---|---|---|---|---|---|---|
| MX123 CONN ASSY 73 CKT BLK OPT0 KEY A/54 | 345660004 | C-HSG-A0 | G-CAP-0-P | TPA-A0 | RS | LS | MAL | CPA | MSEAL | RSEAL | - - - - 68 - 66 65 - - 62 - - - 58 - - - - -<br>- - 50 49 - 47 46 - - - 42 - - - - - - - - -<br>- 32 - - - 28 - - - 24 23 - 21 20 - - 17<br>- - - - - - - - - - - - 4 3 - - | SALEABLE | | 345650003 |
| MX123 CONN ASSY 73 CKT BLK OPT0 KEY A/52 | 345660044 | C-HSG-A0 | G-CAP-0-P | TPA-A0 | RS | LS | MAL | CPA | MSEAL | RSEAL | - - - - 68 - 66 65 - 63 62 - - - 58 - - - - -<br>- - 50 49 - 47 46 - - 43 42 - - - - - - - - -<br>- 32 - - - 28 - - - 24 23 - 21 20 - - 17<br>- - - - - - - - - - - - 4 - - 1 | SALEABLE | | 345650003 |
| MX123 CONN ASSY 73 CKT BLK OPT0 KEY A/53 | 345660064 | C-HSG-A0 | G-CAP-0-P | TPA-A0 | RS | LS | MAL | CPA | MSEAL | RSEAL | - - - - 68 - 66 65 - - 62 - - - 58 - - - - -<br>- - 50 49 - 47 46 - - - 42 - - - - - - - - 33<br>- 32 - - - 28 - - - 24 23 - 21 20 - - 17<br>- - - - - - - - - - - - 4 3 - - | SALEABLE | | 345650003 |

molex

# MX123 SEALED RCPT ASSY (73 Ckt)
## BOM & PIN OUT SHEET

| ASSEMBLY DESCRIPTION | ASSEMBLY PART NUMBER | CONNECTOR HOUSING | GROMMET CAP | TPA | RIGHT SLIDE | LEFT SLIDE | MATE ASSIST LEVER | CPA | MAT SEAL | RING SEAL | BLOCKED TERMINALS<br>CAVITY WITH A NUMBER INDICATES BLOCKED TERMINAL POSITION<br>CAVITY WITHOUT A NUMBER INDICATES OPEN TERMINAL POSITION | STATUS | COMMENTS | INTEGRAL COMPONENTS SOLD SEPARATELY<br>DRESS COVER |
|---|---|---|---|---|---|---|---|---|---|---|---|---|---|---|
| MX123 CONN ASSY 73 CKT BLK OPT0 KEY A/48 | 345660084 | C-HSG-A0 | G-CAP-0-P | TPA-A0 | RS | LS | MAL | CPA | MSEAL | RSEAL | 72 71 - - 68 - 66 65 - 63 62 - - - 58 - - - - -<br>- - 50 49 - 47 46 - - 43 42 - - - - - - - - -<br>- 32 - - - 28 - - - 24 23 - 21 20 - 18 17<br>- - - - - - - 9 - - - - 4 - - 1 | SALEABLE | | 345650003 |
| MX123 CONN ASSY 73 CKT GRY OPT0 KEY B/61 | 345660094 | C-HSG-B0 | G-CAP-0-P | TPA-B0 | RS | LS | MAL | CPA | MSEAL | RSEAL | - - - - - - 66 - - - - - - - 58 - - - - -<br>- - - - - - - - - - - 41 - - 38 37 - - - -<br>- - - - - - - - - - - - 20 19 18 17<br>- - - - - - - - 8 - - 5 - - - 1 | SALEABLE | | 345650003 |
| MX123 CONN ASSY 73 CKT BLK OPT0 KEY A/73 | 345660103 | C-HSG-A0 | G-CAP-0-P | TPA-A0 | RS | LS | MAL | CPA | MSEAL | RSEAL | - - - - - - - - - - - - - - - - - - - - -<br>- - - - - - - - - - - - - - - - - - - - -<br>- - - - - - - - - - - - - - - - - - - - -<br>- - - - - - - - - - - - - - - - - - - - - | SALEABLE | | 345650003 |
| MX123 CONN ASSY 73 CKT GRY OPT0 KEY B/58 | 345660104 | C-HSG-B0 | G-CAP-0-P | TPA-B0 | RS | LS | MAL | CPA | MSEAL | RSEAL | - - - - - - 66 - - - - - - - 58 - - - - -<br>52 51 - - - - - 45 - - - 41 - - 38 37 - - - -<br>- - - - - - - - - - - - 20 19 18 17<br>- - - - - - - - 8 - - 5 - - - 1 | SALEABLE | | 345650003 |
| MX123 CONN ASSY 73 CKT GRY OPT0 KEY B/46 | 345660114 | C-HSG-B0 | G-CAP-0-P | TPA-B0 | RS | LS | MAL | CPA | MSEAL | RSEAL | - - - - 68 67 66 65 - - 62 - 60 59 - - - - 54 53<br>- - - - 48 47 46 45 44 - 42 41 40 39 - - - 35 34 -<br>- 31 - - - 27 - - - - - - - 19 18 17<br>- - - - - - - - - - - - - 3 2 - | SALEABLE | | 345650003 |
| MX123 CONN ASSY 73 CKT GRY OPT0 KEY B/26 | 345660124 | C-HSG-B0 | G-CAP-0-P | TPA-B0 | RS | LS | MAL | CPA | MSEAL | RSEAL | - 71 70 69 68 67 66 65 64 63 - - - - 58 57 56 - 54 53<br>- 51 50 49 - - - 45 44 43 42 41 - 39 38 37 36 35 34 -<br>- 32 31 - 29 28 27 26 25 24 23 - - - - - - -<br>- - - - 13 12 11 10 9 8 7 - 5 - - 2 1 | SALEABLE | | 345650003 |
| MX123 CONN ASSY 73 CKT GRY OPT0 KEY B/30 | 345660134 | C-HSG-B0 | G-CAP-0-P | TPA-B0 | RS | LS | MAL | CPA | MSEAL | RSEAL | - 71 70 69 68 67 66 65 64 63 - - - - 58 57 56 - 54 53<br>- 51 50 49 - - - 45 44 43 42 - - 39 - - - - 34 33<br>- 32 31 - 29 28 27 26 25 24 23 - - - - - - 17<br>- - - - 13 12 11 10 9 8 7 - 5 - - 2 - | SALEABLE | | 345650003 |
| MX123 CONN ASSY 73 CKT GRY OPT9 KEY B/14 | 345660144 | C-HSG-B9 | G-CAP-9-P | TPA-B9 | RS | LS | MAL | CPA | MSEAL | RSEAL | 72 71 70 69 68 67 - 65 64 63 62 61 60 59 - 57 56 55 54 53<br>52 51 50 49 48 47 46 45 44 43 42 - 40 39 - - 36 35 34 33<br>- 32 31 30 29 28 27 26 25 24 23 22 21 - - - -<br>- 16 15 14 13 12 11 10 9 - 7 6 - - 3 2 - | SALEABLE | | 345650003 |
| MX123 CONN ASSY 73 CKT GRY OPT9 KEY B/62 | 345660154 | C-HSG-B9 | G-CAP-9-P | TPA-B9 | RS | LS | MAL | CPA | MSEAL | RSEAL | - - - - - - - - - - - - - - - 58 - - - - -<br>- - - - - - - - - - - 41 - - 38 37 - - - -<br>- - - - - - - - - - - - - 20 19 18 17<br>- - - - - - - - - - - - 5 4 - - 1 | SALEABLE | | 345650003 |
| MX123 CONN ASSY 73 CKT GRY OPT9 KEY B/34 | 345660174 | C-HSG-B9 | G-CAP-9-P | TPA-B9 | RS | LS | MAL | CPA | MSEAL | RSEAL | - - - 69 68 - - 65 64 63 62 61 - 59 58 - 56 55 54 -<br>- - - 49 48 - - 45 44 43 42 41 40 - 38 - 36 - 34 -<br>- 32 31 - - - 27 26 - - - - 21 - - 18 -<br>- 16 15 14 - - 11 10 9 - - 6 5 4 - 2 - | SALEABLE | | 345650003 |
| MX123 CONN ASSY 73 CKT GRY OPT9 KEY B/52 | 345660184 | C-HSG-B9 | G-CAP-9-P | TPA-B9 | RS | LS | MAL | CPA | MSEAL | RSEAL | - - - - - - - - - - 62 - 60 59 - - - - - -<br>- - - - - - - - - - - - - 39 38 - - 35 34 33<br>- 31 - - - 27 - - - 23 22 - 20 19 18 17<br>- 15 - - - - - - - 7 - - 4 3 2 - | SALEABLE | | 345650003 |
| MX123 CONN ASSY 73 CKT BLU OPT0 KEY C/40 | 345660194 | C-HSG-C0 | G-CAP-0-P | TPA-C0 | RS | LS | MAL | CPA | MSEAL | RSEAL | - - - - 68 - - - - 63 62 61 60 59 58 57 - 55 54 53<br>- - - - 48 - - - - 43 42 41 40 - 38 37 36 35 34 33<br>- 32 - - 29 - 27 - - - - - - - - 19 18 17<br>- - - - - - 11 10 - - - - - - 3 2 1 | SALEABLE | | 345650003 |

molex

# MX123 SEALED RCPT ASSY (73 Ckt)
## BOM & PIN OUT SHEET

| ASSEMBLY DESCRIPTION | ASSEMBLY PART NUMBER | CONNECTOR HOUSING | GROMMET CAP | TPA | RIGHT SLIDE | LEFT SLIDE | MATE ASSIST LEVER | CPA | MAT SEAL | RING SEAL | BLOCKED TERMINALS<br>CAVITY WITH A NUMBER INDICATES BLOCKED TERMINAL POSITION<br>CAVITY WITHOUT A NUMBER INDICATES OPEN TERMINAL POSITION | STATUS | COMMENTS | INTEGRAL COMPONENTS SOLD SEPARATELY<br>DRESS COVER |
|---|---|---|---|---|---|---|---|---|---|---|---|---|---|---|
| MX123 CONN ASSY 73 CKT GRY OPT0 KEY B/73 | 345660203 | C-HSG-B0 | G-CAP-0-P | TPA-B0 | RS | LS | MAL | CPA | MSEAL | RSEAL | - - - - - - - - - - - - - - - - - - - - - - -<br>- - - - - - - - - - - - - - - - - - - - - - -<br>-<br>- - - - - - - - - - - - - - - - - - - - - - - | SALEABLE | | 345650003 |
| MX123 CONN ASSY 73 CKT BLU OPT0 KEY C/36 | 345660204 | C-HSG-C0 | G-CAP-0-P | TPA-C0 | RS | LS | MAL | CPA | MSEAL | RSEAL | 72 - - 69 68 - 66 65 - 63 62 - - 59 58 - 56 55 - 53<br>52 - - 49 - - 46 - - 43 42 - 40 39 38 - 36 35 - -<br>-<br>- 31 30 29 - - 26 - 24 23 22 21 20 19 18 -<br>- - - - - - - - - - - - - 4 3 2 1 | SALEABLE | | 345650003 |
| MX123 CONN ASSY 73 CKT GRY OPT0 KEY B/23 | 345660214 | C-HSG-B0 | G-CAP-0-P | TPA-B0 | RS | LS | MAL | CPA | MSEAL | RSEAL | - 71 70 69 68 67 66 65 64 63 - - - - 58 57 56 - 54 53<br>- 51 50 49 48 47 - 45 44 43 42 - - 39 38 37 36 35 34 33<br>-<br>32 31 30 29 28 27 26 - 24 23 - - - - - 17<br>- - - 13 12 11 10 9 8 7 - 5 - - 2 1 | SALEABLE | | 345650003 |
| MX123 CONN ASSY 73 CKT GRY OPT9 KEY B/65 | 345660224 | C-HSG-B9 | G-CAP-9-P | TPA-B9 | RS | LS | MAL | CPA | MSEAL | RSEAL | - - - - - - 66 - - - 62 - - - - - - - - -<br>- - - - - - - 45 - - - 41 - - - - - - - - -<br>-<br>- - - - - - - - - - - - - - - 19 18 17<br>- - - - - - - - - - - - - - - - - - - 1 | SALEABLE | | 345650003 |
| MX123 CONN ASSY 73 CKT BLK OPT0 KEY A/49 | 345660234 | C-HSG-A0 | G-CAP-0-P | TPA-A0 | RS | LS | MAL | CPA | MSEAL | RSEAL | - - - - - 67 - - - 63 62 - - 59 58 - - 55 - -<br>- - - - - 47 - - - - - 41 - - - - - 35 - -<br>-<br>32 - - - - 27 26 25 24 - - - - 19 18 17<br>16 - - - - 11 10 9 8 - - - - 3 - 1 | SALEABLE | | 345650003 |
| MX123 CONN ASSY 73 CKT BLK OPT9 KEY A/34 | 345660244 | C-HSG-A9 | G-CAP-9-P | TPA-A9 | RS | LS | MAL | CPA | MSEAL | RSEAL | - - - 69 68 - - 65 64 63 62 61 - 59 58 - 56 55 54 -<br>- - - 49 48 - - 45 44 43 42 41 40 - 38 - 36 - 34 -<br>-<br>32 31 - - - 27 26 - - - - 21 - - 18 -<br>16 15 14 - - 11 10 9 - - 6 5 4 - 2 - | SALEABLE | | 345650003 |
| MX123 CONN ASSY 73 CKT GRY OPT0 KEY B/49 | 345660254 | C-HSG-B0 | G-CAP-0-P | TPA-B0 | RS | LS | MAL | CPA | MSEAL | RSEAL | - - - - - - - - - - 62 - 60 59 - - - - 54 53<br>- - - - - - - - - - 42 41 - 39 38 - - - 34 33<br>-<br>- 31 - - - 27 - - - 23 22 - 20 - 18 17<br>- 15 - - - - - - 7 - - 4 3 2 1 | SALEABLE | | 345650003 |
| MX123 CONN ASSY 73 CKT BLK OPT9 KEY A/40 | 345660264 | C-HSG-A9 | G-CAP-9-P | TPA-A9 | RS | LS | MAL | CPA | MSEAL | RSEAL | - - - 69 68 - - - - - - - 60 - 58 57 56 - - -<br>- - - 49 48 - - - - - - - 40 - 38 - - - - -<br>-<br>32 31 - - 28 27 26 25 24 23 22 21 20 19 - -<br>16 15 14 - 12 11 10 9 - - 6 5 4 - 2 - | SALEABLE | | 345650003 |
| MX123 CONN ASSY 73 CKT GRY OPT9 KEY B/52 | 345660274 | C-HSG-B9 | G-CAP-9-P | TPA-B9 | RS | LS | MAL | CPA | MSEAL | RSEAL | - - - - - - - - - - 62 - 60 59 - - - - - -<br>- - - - - - - - - - 42 - 40 39 - - - 35 34 33<br>-<br>- 31 - - - 27 - - - 23 22 - 20 - 18 17<br>- - - - - 11 - - - 7 - - 4 3 2 - | SALEABLE | | 345650003 |
| MX123 CONN ASSY 73 CKT BLK OPT9 KEY A/29 | 345660284 | C-HSG-A9 | G-CAP-9-P | TPA-A9 | RS | LS | MAL | CPA | MSEAL | RSEAL | - - - 69 68 - - 65 64 63 62 61 60 59 58 - 56 55 54 -<br>- - - 49 48 - - 45 44 43 42 41 40 - - - 36 - 34 -<br>-<br>32 31 - - - 27 26 25 24 23 22 21 20 19 18 -<br>16 15 14 - - 11 10 9 - - - 5 4 - 2 - | SALEABLE | | 345650003 |
| MX123 CONN ASSY 73 CKT GRY OPT0 KEY B/48 | 345660294 | C-HSG-B0 | G-CAP-0-P | TPA-B0 | RS | LS | MAL | CPA | MSEAL | RSEAL | - - - - - - - - - - 62 - 60 59 - - - - 54 53<br>- - - - - - - - - - 42 41 - 39 38 - - 35 34 33<br>-<br>- 31 - - - 27 - - - 23 22 - 20 - 18 17<br>- 15 - - - - - - - 7 - - 4 3 2 1 | SALEABLE | | 345650003 |
| MX123 CONN ASSY 73 CKT BLU OPT0 KEY C/73 | 345660303 | C-HSG-C0 | G-CAP-0-P | TPA-C0 | RS | LS | MAL | CPA | MSEAL | RSEAL | - - - - - - - - - - - - - - - - - - - - - - -<br>- - - - - - - - - - - - - - - - - - - - - - -<br>-<br>- - - - - - - - - - - - - - - - - - - - - - - | SALEABLE | | 345650003 |

| ASSEMBLY DESCRIPTION | ASSEMBLY PART NUMBER | CONNECTOR HOUSING | GROMMET CAP | TPA | RIGHT SLIDE | LEFT SLIDE | MATE ASSIST LEVER | CPA | MAT SEAL | RING SEAL | BLOCKED TERMINALS<br>CAVITY WITH A NUMBER INDICATES BLOCKED TERMINAL POSITION<br>CAVITY WITHOUT A NUMBER INDICATES OPEN TERMINAL POSITION | STATUS | COMMENTS | INTEGRAL COMPONENTS SOLD SEPARATELY<br>DRESS COVER |
|---|---|---|---|---|---|---|---|---|---|---|---|---|---|---|
| MX123 CONN ASSY 73 CKT GRY OPT9 KEY B/53 | 345660304 | C-HSG-B9 | G-CAP-9-P | TPA-B9 | RS | LS | MAL | CPA | MSEAL | RSEAL | - - - - - - - - - - 62 - 60 59 - - - - - -<br>- - - - - - - - - - - - - - 39 38 - - 35 34 -<br>- - - - - 31 - - - 27 - - - 23 22 - 20 19 18 17<br>- - - - - 15 - - - - - - - 7 - - 4 3 2 - | SALEABLE | | 345650003 |
| MX123 CONN ASSY 73 CKT GRY OPT9 KEY B/61 | 345660314 | C-HSG-B9 | G-CAP-9-P | TPA-B9 | RS | LS | MAL | CPA | MSEAL | RSEAL | - - - - - - - - - - - - - - 58 - - - - -<br>- - - - - - - - - - - 41 - - 38 37 - - - -<br>- - - - - - - - - - - - - - - - 20 19 18 17<br>- - - - - - - - - - - - 8 - - 5 4 - - 1 | SALEABLE | | 345650003 |
| MX123 CONN ASSY 73 CKT GRY OPT9 KEY B/43 | 345660324 | C-HSG-B9 | G-CAP-9-P | TPA-B9 | RS | LS | MAL | CPA | MSEAL | RSEAL | - - - - 68 67 66 65 - - 62 - 60 59 - - - - 54 53<br>- - - - 48 47 46 45 44 - 42 41 40 39 - - - 35 34 33<br>- - - - - 31 - - - 27 - - - - - - - 19 18 17<br>- - - - - 15 - - - - - - - - - - - 3 2 1 | SALEABLE | | 345650003 |
| MX123 CONN ASSY 73 CKT GRY OPT0 KEY B/50 | 345660334 | C-HSG-B0 | G-CAP-0-P | TPA-B0 | RS | LS | MAL | CPA | MSEAL | RSEAL | - - - - - - - - - - - - - - - - - - - - -<br>- - - - - - - - - - - - - - - 38 37 - 35 34 -<br>- - - - 32 31 - 29 28 27 26 25 24 23 - - - - - -<br>- - - - - - - 13 12 11 10 9 8 7 - 5 - - 2 1 | SALEABLE | | 345650003 |
| MX123 CONN ASSY 73 CKT GRY OPT0 KEY B/68 | 345660344 | C-HSG-B0 | G-CAP-0-P | TPA-B0 | RS | LS | MAL | CPA | MSEAL | RSEAL | - - - - - - - - - - - - - - - - - - - - -<br>- - - - - - - - - - - - - - - - - - - - -<br>- - - - - - - - - - - - - - - - - - 19 18 17<br>- - - - - - - - - - - - - - - - - - 3 2 - | SALEABLE | | 345650003 |
| MX123 CONN ASSY 73 CKT GRY OPT0 KEY B/54 | 345660354 | C-HSG-B0 | G-CAP-0-P | TPA-B0 | RS | LS | MAL | CPA | MSEAL | RSEAL | - - - - - - - - - - - - - - - - - - - - -<br>- - - - - - - - - - 42 - - 39 - - - - - -<br>- - - - 32 31 - 29 28 27 26 25 24 23 - - - - - 17<br>- - - - - - - 13 12 11 10 9 - - - 5 - - 2 - | SALEABLE | | 345650003 |
| MX123 CONN ASSY 73 CKT GRY OPT0 KEY B/49 | 345660364 | C-HSG-B0 | G-CAP-0-P | TPA-B0 | RS | LS | MAL | CPA | MSEAL | RSEAL | - - - - - - - - - - - - - - - - - - - - -<br>- - - - - - - - - - - - - - - - 38 37 36 35 34 -<br>- - - - 32 31 - 29 28 27 26 25 24 23 - - - - - -<br>- - - - - - - 13 12 11 10 9 8 7 - 5 - - 2 1 | SALEABLE | | 345650003 |
| MX123 CONN ASSY 73 CKT BLK OPT0 KEY A/53 | 345660374 | C-HSG-A0 | G-CAP-0-P | TPA-A0 | RS | LS | MAL | CPA | MSEAL | RSEAL | - - - - - - - - - - - - - - - - - - - - -<br>- - - - - - - - - - 42 - - 39 - - - - - -<br>- - - - 32 31 - 29 28 27 26 25 24 23 - - - - - 17<br>- - - - - - - 13 12 11 10 9 - 7 - 5 - - 2 - | SALEABLE | | 345650003 |
| MX123 CONN ASSY 73 CKT GRY OPT0 KEY B/59 | 345660384 | C-HSG-B0 | G-CAP-0-P | TPA-B0 | RS | LS | MAL | CPA | MSEAL | RSEAL | - - - - - - 66 - - - 62 - - - 58 - - - - -<br>- - - - - - - - - - - 41 - - 38 37 - - - -<br>- - - - - - - - - - - - - - - - 20 19 18 17<br>- - - - - - - - - - - - 8 - - 5 4 - - 1 | SALEABLE | | 345650003 |
| MX123 CONN ASSY 73 CKT GRY OPT9 KEY B/58 | 345660394 | C-HSG-B9 | G-CAP-9-P | TPA-B9 | RS | LS | MAL | CPA | MSEAL | RSEAL | - - - - - - 66 - - - - - - - 58 - - - - -<br>52 51 - - - - - 45 - - - 41 - - 38 37 - - - -<br>- - - - - - - - - - - - - - - - 20 19 18 17<br>- - - - - - - - - - - - 8 - 6 - - - - 1 | SALEABLE | | 345650003 |
| MX123 CONN ASSY 73 CKT GRY OPT0 KEY B/48 | 345660404 | C-HSG-B0 | G-CAP-0-P | TPA-B0 | RS | LS | MAL | CPA | MSEAL | RSEAL | - - - - - - - - - - 62 - 60 59 - - - - 54 53<br>- - - - - - - - - - 42 41 - 39 38 - - 35 34 33<br>- - - - - 31 - - - 27 - 25 - 23 22 - - - 18 17<br>- - - - - 15 - - - - - - - 7 - - 4 3 2 1 | SALEABLE | | 345650003 |
| MX123 CONN ASSY 73 CKT BLK OPT0 KEY A/56 | 345660484 | C-HSG-A0 | G-CAP-0-P | TPA-A0 | RS | LS | MAL | CPA | MSEAL | RSEAL | - - - - 68 - 66 65 - - 62 - - - 58 - - - - -<br>- - 50 49 - 47 46 - - - 42 - - - - - - - - -<br>- - - - 32 - - - 28 - - - 24 23 - - 20 - - 17<br>- - - - - - - - - - - - - - - - 4 - - - | SALEABLE | | 345650003 |

molex

# MX123 SEALED RCPT ASSY (73 Ckt)
## BOM & PIN OUT SHEET

| ASSEMBLY DESCRIPTION | ASSEMBLY PART NUMBER | CONNECTOR HOUSING | GROMMET CAP | TPA | RIGHT SLIDE | LEFT SLIDE | MATE ASSIST LEVER | CPA | MAT SEAL | RING SEAL | BLOCKED TERMINALS<br>CAVITY WITH A NUMBER INDICATES BLOCKED TERMINAL POSITION<br>CAVITY WITHOUT A NUMBER INDICATES OPEN TERMINAL POSITION | STATUS | COMMENTS | INTEGRAL COMPONENTS SOLD SEPARATELY<br>DRESS COVER |
|---|---|---|---|---|---|---|---|---|---|---|---|---|---|---|
| MX123 CONN ASSY 73 CKT GRY OPT0 KEY B/46 | 345660514 | C-HSG-B0 | G-CAP-0-P | TPA-B0 | RS | LS | MAL | CPA | MSEAL | RSEAL | - - - - - - - - - - 62 - 60 59 - - - - 54 53<br>- - - - - - - - - - 42 41 - 39 38 - - 35 34 33<br>- - 31 - - - 27 - - - 23 22 - 20 19 18 17<br>- - 15 - - 12 - - - - 7 - - 4 3 2 1 | SALEABLE | | 345650003 |
| MX123 CONN ASSY 73 CKT BLK OPT0 KEY A/30 | 345660524 | C-HSG-A0 | G-CAP-0-P | TPA-A0 | RS | LS | MAL | CPA | MSEAL | RSEAL | - - - 69 68 - - 65 64 63 62 61 60 59 58 57 56 55 54 -<br>- - - 49 48 - - 45 44 43 42 41 40 - 38 - 36 - 34 -<br>32 31 - - - - - 25 24 23 22 21 20 19 18 -<br>16 15 14 - - - - 9 - - 6 5 4 - 2 - | SALEABLE | | 345650003 |
| MX123 CONN ASSY 73 CKT BLK OPT9 KEY A/46 | 345660534 | C-HSG-A9 | G-CAP-9-P | TPA-A9 | RS | LS | MAL | CPA | MSEAL | RSEAL | - - - - - - - 65 - 63 - 61 - 59 58 57 - - - 53<br>- - - - 48 - - - - 43 42 41 - - 38 37 - - 34 -<br>32 31 30 29 28 - - - - 23 22 - - 19 - 17<br>- 15 - - - 11 - - - 7 - - - - 2 - | SALEABLE | | 345650003 |
| MX123 CONN ASSY 73 CKT GRY OPT9 KEY B/59 | 345660544 | C-HSG-B9 | G-CAP-9-P | TPA-B9 | RS | LS | MAL | CPA | MSEAL | RSEAL | - - - - - - 66 - - - 62 - - - 58 - - - - -<br>- - - - - - - - - - - 41 - - 38 37 - - - -<br>- - - - - - - - - - - - - - - 20 19 18 17<br>- - - - - - - - - 8 - - 5 4 - - 1 | SALEABLE | | 345650003 |
| MX123 CONN ASSY 73 CKT NAT OPT0 KEY F/73 | 345660603 | C-HSG-F0 | G-CAP-0-P | TPA-F0 | RS | LS | MAL | CPA | MSEAL | RSEAL | - - - - - - - - - - - - - - - - - - - - -<br>- - - - - - - - - - - - - - - - - - - - -<br>- - - - - - - - - - - - - - - - - - - - -<br>- - - - - - - - - - - - - - - - - - - - - | SALEABLE | | 345650003 |
| MX123 CONN ASSY 73 CKT BLK OPT9 KEY A/38 | 345660604 | C-HSG-A9 | G-CAP-9-P | TPA-A9 | RS | LS | MAL | CPA | MSEAL | RSEAL | - - - 69 68 - - - - - - - 60 - 58 57 56 - 54 -<br>- - - 49 48 - - - - - - - 40 - - - - 35 34 -<br>32 31 - - 28 27 26 25 24 23 22 21 20 19 18 -<br>16 15 14 - 12 11 10 9 - - - 5 4 - 2 - | SALEABLE | | 345650003 |
| MX123 CONN ASSY 73 CKT GRY OPT0 KEY B/43 | 345660624 | C-HSG-B0 | G-CAP-0-P | TPA-B0 | RS | LS | MAL | CPA | MSEAL | RSEAL | - - - - 68 67 66 65 64 - 62 - 60 59 - - - - 54 53<br>- - - - 48 47 46 - 44 - 42 - 40 39 - - - 35 34 -<br>- 31 - - - 27 - - - - - - - 19 18 17<br>- 15 14 - - 11 - - - - - - - 3 2 1 | SALEABLE | | 345650003 |
| MX123 CONN ASSY 73 CKT BLK OPT9 KEY A/42 | 345660634 | C-HSG-A9 | G-CAP-9-P | TPA-A9 | RS | LS | MAL | CPA | MSEAL | RSEAL | 72 71 - - 68 - 66 65 - 63 62 - - - 58 - - - - -<br>- - 50 49 - 47 46 - - 43 42 - 40 - - - - - - -<br>32 31 - 29 - - - - 24 23 - 21 20 - 18 17<br>16 - - - - - - 9 - 7 6 - 4 3 - 1 | SALEABLE | | 345650003 |
| MX123 CONN ASSY 73 CKT BLK OPT9 KEY A/43 | 345660654 | C-HSG-A9 | G-CAP-9-P | TPA-A9 | RS | LS | MAL | CPA | MSEAL | RSEAL | 72 71 - - 68 - 66 65 - 63 62 - - - 58 - - - - -<br>- - 50 49 - 47 46 - - 43 42 - 40 - - - - - - 33<br>32 31 - 29 - - - - 24 23 - - 20 - 18 17<br>16 - - - - - - 9 - - 6 - 4 3 - 1 | SALEABLE | | 345650003 |
| MX123 CONN ASSY 73 CKT GRY OPT9 KEY B/50 | 345660674 | C-HSG-B9 | G-CAP-9-P | TPA-B9 | RS | LS | MAL | CPA | MSEAL | RSEAL | - - - - - - 66 65 - - 62 - 60 59 - - - - 54 53<br>- - - - - - 46 45 - - 42 - 40 39 - - - 35 34 33<br>- 31 - - - 27 - - - - - - - - 18 17<br>- - - - - 11 - - - - - - - 3 2 1 | SALEABLE | | 345650003 |
| MX123 CONN ASSY 73 CKT BLK OPT0 KEY A/24 | 345660724 | C-HSG-A0 | G-CAP-0-P | TPA-A0 | RS | LS | MAL | CPA | MSEAL | RSEAL | 72 71 70 69 - 67 - - 64 - - 61 60 59 - 57 56 55 54 53<br>52 51 - - 48 - - 45 44 - - 41 40 39 38 37 36 35 34 -<br>- 31 30 29 - 27 26 25 - - 22 - - 19 18 -<br>16 15 14 13 12 11 10 9 8 7 6 5 - - 2 - | SALEABLE | | 345650003 |
| MX123 CONN ASSY 73 CKT BLK OPT0 KEY A/31 | 345661013 | C-HSG-A0 | G-CAP-0-P | TPA-A0 | RS | LS | MAL | CPA | MSEAL | RSEAL | 72 - 70 - - 67 66 - - - 62 - 60 - - - - 55 54 53<br>- 51 - - 48 - 46 45 44 43 42 - 40 39 - - - 35 - -<br>- - - - - - 26 25 - - 22 21 - - - -<br>- 15 14 - - - - - 8 7 6 5 4 - - - | SALEABLE | | 345650003 |

molex

MX123 SEALED RCPT ASSY (73 Ckt)
BOM & PIN OUT SHEET

| ASSEMBLY DESCRIPTION | ASSEMBLY PART NUMBER | CONNECTOR HOUSING | GROMMET CAP | TPA | RIGHT SLIDE | LEFT SLIDE | MATE ASSIST LEVER | CPA | MAT SEAL | RING SEAL | BLOCKED TERMINALS<br>CAVITY WITH A NUMBER INDICATES BLOCKED TERMINAL POSITION<br>CAVITY WITHOUT A NUMBER INDICATES OPEN TERMINAL POSITION | STATUS | COMMENTS | INTEGRAL COMPONENTS SOLD SEPARATELY<br>DRESS COVER |
|---|---|---|---|---|---|---|---|---|---|---|---|---|---|---|
| MX123 CONN ASSY 73 CKT BLK OPT0 KEY A/34 | 345661023 | C-HSG-A0 | G-CAP-0-P | TPA-A0 | RS | LS | MAL | CPA | MSEAL | RSEAL | 72 71 - 69 68 - - - 64 63 62 61 60 59 - - 56 - - 53<br>52 51 - - 48 - 46 45 - - - - 40 - 38 - 36 - 34 33<br>- - 31 - 29 28 - 26 - - 23 22 - - - - -<br>- - - 14 - 12 11 - - - 7 - - 4 - - - | SALEABLE | | 345650003 |
| MX123 CONN ASSY 73 CKT BLK OPT0 KEY A/32 | 345661033 | C-HSG-A0 | G-CAP-0-P | TPA-A0 | RS | LS | MAL | CPA | MSEAL | RSEAL | - 71 - 69 68 - - - 64 63 62 61 60 59 - - 56 - - 53<br>52 51 - - 48 - 46 45 - - - - 40 - 38 - 36 - 34 33<br>- 31 - 29 28 - - - - 23 22 - - - - -<br>- - 14 - 12 11 - - - 7 - - 4 - - - | SALEABLE | | 345650003 |
| MX123 CONN ASSY 73 CKT GRY OPT0 KEY B/30 | 345661043 | C-HSG-B0 | G-CAP-0-P | TPA-B0 | RS | LS | MAL | CPA | MSEAL | RSEAL | 72 - - 69 - 67 - - 64 63 62 61 60 - - - 56 55 - -<br>52 - - - - 47 - - 44 - 42 - - - - - - - 34 -<br>- - - 29 28 27 26 25 - - - 21 - 19 18 17<br>- 15 14 - - - - - - - - - - 3 2 1 | SALEABLE | | 345650003 |
| MX123 CONN ASSY 73 CKT GRY OPT0 KEY B/50 | 345661063 | C-HSG-B0 | G-CAP-0-P | TPA-B0 | RS | LS | MAL | CPA | MSEAL | RSEAL | 72 71 70 69 68 67 66 - 64 63 62 61 - - 58 - - - 54 -<br>52 51 50 - - - 46 45 - 43 42 41 - - 38 - - - 34 -<br>32 31 30 - - 27 26 25 - - 22 - 20 19 18 17<br>16 15 14 13 12 11 10 9 8 7 6 5 4 3 - 1 | SALEABLE | | 345650003 |
| MX123 CONN ASSY 73 CKT BLK OPT0 KEY A/28 | 345661073 | C-HSG-A0 | G-CAP-0-P | TPA-A0 | RS | LS | MAL | CPA | MSEAL | RSEAL | - - - - - - - - - - 62 - 60 - - - - 55 - 53<br>52 51 - - - - 46 45 44 43 - - 40 39 - - - 35 - -<br>- - - - - - - 25 - - 22 21 - - - 17<br>- 15 14 - - - - - 8 7 6 5 4 3 2 1 | SALEABLE | | 345650003 |
| MX123 CONN ASSY 73 CKT GRY OPT0 KEY B/28 | 345661083 | C-HSG-B0 | G-CAP-0-P | TPA-B0 | RS | LS | MAL | CPA | MSEAL | RSEAL | 72 71 70 69 - - - - - 63 62 61 60 - - - 56 - - -<br>52 - - - - 47 - - 44 - - - - - - - 36 - 34 -<br>- - - 29 28 27 - 25 - - - 21 - 19 18 17<br>- 15 14 - 12 11 - - - - - - - - - 1 | SALEABLE | | 345650003 |
| MX123 CONN ASSY 73 CKT BLK OPT0 KEY A/40 | 345661093 | C-HSG-A0 | G-CAP-0-P | TPA-A0 | RS | LS | MAL | CPA | MSEAL | RSEAL | 72 71 - 69 - - - 65 64 63 62 61 60 59 - 57 - - - 53<br>52 51 50 - 48 - 46 45 - - - - 40 - 38 - - 35 - 33<br>32 - - 29 28 - 26 - - 23 22 - - - - 17<br>16 15 14 - 12 11 10 9 8 7 - - - - 2 - | SALEABLE | | 345650003 |
| MX123 CONN ASSY 73 CKT BLK OPT0 KEY A/39 | 345661133 | C-HSG-A0 | G-CAP-0-P | TPA-A0 | RS | LS | MAL | CPA | MSEAL | RSEAL | 72 71 - 69 - - - 65 64 63 62 - 60 59 - - 56 - - 53<br>52 51 50 - 48 - 46 - - - - 40 - 38 - 36 35 - 33<br>- 31 - 29 28 - 26 - - 23 22 - - - - 17<br>16 15 14 - 12 - 10 9 8 7 - - 4 - 2 - | SALEABLE | | 345650003 |
| MX123 CONN ASSY 73 CKT BLK OPT0 KEY A/31 | 345661143 | C-HSG-A0 | G-CAP-0-P | TPA-A0 | RS | LS | MAL | CPA | MSEAL | RSEAL | 72 71 70 69 - 67 66 - 64 - 62 - 60 - - 57 - 55 54 -<br>- 51 - 49 48 - 46 45 44 43 42 - 40 39 - - - - - -<br>- - - - - - 26 - - - - - - - - - -<br>- - - - - - - - 8 7 6 5 4 3 2 - | SALEABLE | | 345650003 |
| MX123 CONN ASSY 73 CKT BLK OPT0 KEY A/42 | 345661153 | C-HSG-A0 | G-CAP-0-P | TPA-A0 | RS | LS | MAL | CPA | MSEAL | RSEAL | 72 71 - 69 68 - - - 64 63 62 61 60 59 - - 56 - 54 53<br>52 51 50 - 48 - 46 45 - - - - 40 - 38 - 36 35 34 33<br>- 31 - 29 28 - 26 - - - 22 - - - - 17<br>16 15 14 - 12 11 10 9 - 7 - - 4 - 2 - | SALEABLE | | 345650003 |
| MX123 CONN ASSY 73 CKT BLK OPT0 KEY A/27 | 345661173 | C-HSG-A0 | G-CAP-0-P | TPA-A0 | RS | LS | MAL | CPA | MSEAL | RSEAL | - - 70 - - 67 66 - - - - - - - - 57 - 55 - 53<br>- 51 - - - - 46 - 44 43 - - 40 39 - - - 35 - -<br>- - - - - - - 25 - - 22 21 - - - -<br>- 15 14 - - - - - 8 7 6 5 4 3 2 1 | SALEABLE | | 345650003 |
| MX123 CONN ASSY 73 CKT GRY OPT0 KEY B/48 | 345661183 | C-HSG-B0 | G-CAP-0-P | TPA-B0 | RS | LS | MAL | CPA | MSEAL | RSEAL | 72 71 70 69 68 67 - - - 63 - 61 60 - 58 - 56 - 54 -<br>52 51 50 - - - 46 45 - 43 - 41 40 - 38 - 36 - 34 -<br>32 31 30 - - 27 26 25 24 - 22 - 20 19 18 -<br>16 15 14 13 - 11 10 - 8 - 6 5 4 3 2 1 | SALEABLE | | 345650003 |

| ASSEMBLY DESCRIPTION | ASSEMBLY PART NUMBER | CONNECTOR HOUSING | GROMMET CAP | TPA | RIGHT SLIDE | LEFT SLIDE | MATE ASSIST LEVER | CPA | MAT SEAL | RING SEAL | BLOCKED TERMINALS<br>CAVITY WITH A NUMBER INDICATES BLOCKED TERMINAL POSITION<br>CAVITY WITHOUT A NUMBER INDICATES OPEN TERMINAL POSITION | STATUS | COMMENTS | INTEGRAL COMPONENTS SOLD SEPARATELY<br>DRESS COVER |
|---|---|---|---|---|---|---|---|---|---|---|---|---|---|---|
| MX123 CONN ASSY 73 CKT BLK OPT0 KEY A/32 | 345661193 | C-HSG-A0 | G-CAP-0-P | TPA-A0 | RS | LS | MAL | CPA | MSEAL | RSEAL | - - 70 - - - - 65 - - - 61 - - 58 57 56 55 - -<br>- 51 50 - - 47 - 45 - - - 41 40 - 38 37 36 35 - -<br>- - 31 30 - 28 - 26 25 24 - 22 21 20 19 18 -<br>16 15 - - - - 10 - - - - - - - - - | SALEABLE | | 345650003 |
| MX123 CONN ASSY 73 CKT BLK OPT0 KEY A/36 | 345661213 | C-HSG-A0 | G-CAP-0-P | TPA-A0 | RS | LS | MAL | CPA | MSEAL | RSEAL | - - 70 - - - - 65 - - - 61 60 - 58 57 56 55 - -<br>- 51 50 49 - 47 - 45 - - - 41 40 - 38 37 36 35 34 -<br>- - 31 30 - 28 - 26 25 - - 22 21 20 19 18 -<br>16 15 - - - - 10 - - 7 6 - - - - - | SALEABLE | | 345650003 |
| MX123 CONN ASSY 73 CKT GRY OPT0 KEY B/48 | 345661223 | C-HSG-B0 | G-CAP-0-P | TPA-B0 | RS | LS | MAL | CPA | MSEAL | RSEAL | 72 71 70 69 68 - - - 64 - - 61 60 - 58 - 56 - 54 -<br>52 51 50 49 - 47 46 45 44 - - 41 40 - 38 - 36 - 34 -<br>32 31 30 - 28 - - 25 24 - 22 - 20 19 18 -<br>16 15 14 13 - 11 10 - 8 - 6 5 4 3 2 1 | SALEABLE | | 345650003 |
| MX123 CONN ASSY 73 CKT GRY OPT0 KEY B/52 | 345661233 | C-HSG-B0 | G-CAP-0-P | TPA-B0 | RS | LS | MAL | CPA | MSEAL | RSEAL | 72 71 70 69 68 67 66 - 64 63 - 61 60 - 58 - 56 - 54 -<br>52 51 50 49 - 47 - 45 44 43 - 41 40 - 38 - 36 - 34 -<br>32 31 30 - 28 27 - 25 24 - 22 - 20 19 18 -<br>16 15 14 13 - 11 10 - 8 - 6 5 4 3 2 1 | SALEABLE | | 345650003 |
| MX123 CONN ASSY 73 CKT GRY OPT0 KEY B/51 | 345661243 | C-HSG-B0 | G-CAP-0-P | TPA-B0 | RS | LS | MAL | CPA | MSEAL | RSEAL | 72 71 70 69 68 67 66 65 64 63 62 61 60 - 58 - 56 - 54 -<br>52 51 - 49 - 47 - 45 44 43 42 41 40 - 38 - 36 - 34 -<br>32 31 30 - 28 27 26 25 24 - 22 - 20 19 18 -<br>16 - 14 13 - 11 10 9 8 - - - - - 2 1 | SALEABLE | | 345650003 |
| MX123 CONN ASSY 73 CKT GRY OPT9 KEY B/55 | 345661253 | C-HSG-B9 | G-CAP-9-P | TPA-B9 | RS | LS | MAL | CPA | MSEAL | RSEAL | 72 71 70 69 68 67 66 - 64 63 62 61 - - 58 - 56 - 54 -<br>52 51 50 - - 47 - 45 44 43 42 41 - - 38 - 36 - 34 -<br>32 31 30 29 28 27 26 25 - - 22 - 20 19 18 17<br>16 15 14 13 12 11 10 9 8 7 6 5 4 3 - 1 | SALEABLE | | 345650003 |
| MX123 CONN ASSY 73 CKT BLK OPT9 KEY A/32 | 345661263 | C-HSG-A9 | G-CAP-9-P | TPA-A9 | RS | LS | MAL | CPA | MSEAL | RSEAL | - - 70 - - - - 65 - - - 61 60 - 58 57 - 55 54 -<br>52 51 - 49 - 47 - 45 - - - 41 40 - 38 37 - - 34 -<br>- 31 - - 28 - 26 25 - - 22 21 - 19 18 -<br>16 15 - - - - 10 - - 7 6 - - - - - | SALEABLE | | 345650003 |
| MX123 CONN ASSY 73 CKT BLK OPT0 KEY A/33 | 345661273 | C-HSG-A0 | G-CAP-0-P | TPA-A0 | RS | LS | MAL | CPA | MSEAL | RSEAL | 72 71 - - - 67 66 - - - 62 - 60 - - - - 55 54 53<br>- 51 - - - - 46 45 44 43 42 - 40 39 - - - 35 - -<br>- - - - - - 26 25 - - 22 21 - - - 17<br>- 15 14 - - - - - 8 7 6 5 4 3 2 - | SALEABLE | | 345650003 |
| MX123 CONN ASSY 73 CKT BLK OPT0 KEY A/28 | 345661283 | C-HSG-A0 | G-CAP-0-P | TPA-A0 | RS | LS | MAL | CPA | MSEAL | RSEAL | - - - - - 67 - - - - 62 - 60 - - - - 55 - 53<br>- 51 - - - - 46 45 44 43 - - 40 39 - - - 35 - -<br>- - - - - - - 25 - - 22 21 - - - 17<br>- 15 14 - - - - - 8 7 6 5 4 3 2 1 | SALEABLE | | 345650003 |
| MX123 CONN ASSY 73 CKT BLK OPT0 KEY A/38 | 345661293 | C-HSG-A0 | G-CAP-0-P | TPA-A0 | RS | LS | MAL | CPA | MSEAL | RSEAL | 72 71 70 69 - 67 66 - 64 - 62 - 60 - - 57 - 55 54 53<br>- 51 - 49 48 - 46 45 44 43 42 - 40 39 - - - 35 - -<br>- - - - - - 26 25 - - 22 21 - - - -<br>- 15 14 - - - - - 8 7 6 5 4 3 2 - | SALEABLE | | 345650003 |
| MX123 CONN ASSY 73 CKT BLK OPT9 KEY A/73 | 345661303 | C-HSG-A9 | G-CAP-9-P | TPA-A9 | RS | LS | MAL | CPA | MSEAL | RSEAL | - - - - - - - - - - - - - - - - - - - -<br>- - - - - - - - - - - - - - - - - - - -<br>- - - - - - - - - - - - - - - - - - - -<br>- - - - - - - - - - - - - - - - - - - - | SALEABLE | | 345650003 |
| MX123 CONN ASSY 73 CKT BLK OPT0 KEY A/4 | 345661323 | C-HSG-A0 | G-CAP-0-P | TPA-A0 | RS | LS | MAL | CPA | MSEAL | RSEAL | - - - - - - - - - - 61 - - - - - - - -<br>- - - - - - - - - - - - - - - - - - - -<br>- - - - - - 26 - - - - - - - - -<br>- - - - - - 10 - - - - - - - - - | SALEABLE | | 345650003 |

molex

# MX123 SEALED RCPT ASSY (73 Ckt)
## BOM & PIN OUT SHEET

| ASSEMBLY DESCRIPTION | ASSEMBLY PART NUMBER | CONNECTOR HOUSING | GROMMET CAP | TPA | RIGHT SLIDE | LEFT SLIDE | MATE ASSIST LEVER | CPA | MAT SEAL | RING SEAL | BLOCKED TERMINALS<br>CAVITY WITH A NUMBER INDICATES BLOCKED TERMINAL POSITION<br>CAVITY WITHOUT A NUMBER INDICATES OPEN TERMINAL POSITION | STATUS | COMMENTS | INTEGRAL COMPONENTS SOLD SEPARATELY<br>DRESS COVER |
|---|---|---|---|---|---|---|---|---|---|---|---|---|---|---|
| MX123 CONN ASSY 73 CKT BLK OPT0 KEY A/36 | 345661333 | C-HSG-A0 | G-CAP-0-P | TPA-A0 | RS | LS | MAL | CPA | MSEAL | RSEAL | 72 71 - - - 67 66 - - 63 62 61 60 - - 57 - 55 54 53<br>- 51 - - 48 - 46 45 44 43 42 - 40 39 - - - 35 - 33<br>- - - - - - - 26 25 24 - 22 21 - - - -<br>- 15 14 - - - - - - 7 - 5 4 3 2 - | SALEABLE | | 345650003 |
| MX123 CONN ASSY 73 CKT BLK OPT0 KEY A/31 | 345661343 | C-HSG-A0 | G-CAP-0-P | TPA-A0 | RS | LS | MAL | CPA | MSEAL | RSEAL | - - 70 - 68 - 66 - - - 62 61 60 - - - - 55 54 53<br>52 51 - - - - 46 45 44 43 42 - 40 39 - - - 35 - 33<br>- - - - - - 26 25 24 - 22 21 - - - -<br>- 15 14 - - - - - - 8 - - 5 - - 2 - | SALEABLE | | 345650003 |
| MX123 CONN ASSY 73 CKT BLK OPT0 KEY A/38 | 345661363 | C-HSG-A0 | G-CAP-0-P | TPA-A0 | RS | LS | MAL | CPA | MSEAL | RSEAL | - - 70 - - - - 65 - - - 61 60 - 58 57 56 55 54 -<br>52 51 50 49 - 47 - 45 - - - 41 40 - 38 37 36 35 34 -<br>- 31 30 - 28 - 26 25 - - 22 21 20 19 18 -<br>16 15 - - - - 10 - - 7 6 - - - - - | SALEABLE | | 345650003 |
| MX123 CONN ASSY 73 CKT GRY OPT0 KEY B/51 | 345661373 | C-HSG-B0 | G-CAP-0-P | TPA-B0 | RS | LS | MAL | CPA | MSEAL | RSEAL | 72 71 70 69 68 67 - - 64 63 - 61 60 - 58 - 56 - 54 -<br>52 51 50 49 - 47 - 45 44 43 - 41 40 - 38 - 36 - 34 -<br>32 31 30 - 28 27 - 25 24 - 22 - 20 19 18 -<br>16 15 14 13 - 11 10 - 8 - 6 5 4 3 2 1 | SALEABLE | | 345650003 |
| MX123 CONN ASSY 73 CKT GRY OPT0 KEY B/51 | 345661383 | C-HSG-B0 | G-CAP-0-P | TPA-B0 | RS | LS | MAL | CPA | MSEAL | RSEAL | 72 71 70 69 68 67 66 - 64 63 62 61 60 - - - 56 - 54 -<br>52 51 50 - - - - 45 44 43 42 41 40 - - - 36 - 34 -<br>32 31 30 - 28 27 26 25 24 - - - 20 19 18 -<br>16 15 14 13 - 11 10 9 8 - 6 5 4 3 2 1 | SALEABLE | | 345650003 |
| MX123 CONN ASSY 73 CKT BLK OPT0 KEY A/41 | 345661393 | C-HSG-A0 | G-CAP-0-P | TPA-A0 | RS | LS | MAL | CPA | MSEAL | RSEAL | 72 71 - 69 68 - - 65 64 63 62 - 60 59 - - 56 - - 53<br>52 51 50 49 48 - 46 - - - - - 40 - 38 - 36 35 - 33<br>- 31 - 29 28 - 26 - - 23 22 - - - - 17<br>16 15 14 - 12 - 10 9 8 7 - - 4 - 2 - | SALEABLE | | 345650003 |
| MX123 CONN ASSY 73 CKT GRY OPT9 KEY B/73 | 345661403 | C-HSG-B9 | G-CAP-9-P | TPA-B9 | RS | LS | MAL | CPA | MSEAL | RSEAL | - - - - - - - - - - - - - - - - - - - -<br>- - - - - - - - - - - - - - - - - - - -<br>- - - - - - - - - - - - - - - - - - - -<br>- - - - - - - - - - - - - - - - - - - - | SALEABLE | | 345650003 |
| MX123 CONN ASSY 73 CKT GRY OPT0 KEY B/25 | 345661423 | C-HSG-B0 | G-CAP-0-P | TPA-B0 | RS | LS | MAL | CPA | MSEAL | RSEAL | 72 71 70 69 - - - - 64 63 62 - - - - - 56 55 - -<br>52 - - - - - - - 44 - - - - - - - 36 - - -<br>- - - 29 28 27 - 25 - - - - - 19 18 17<br>- - - - 12 11 - - - - - - - 3 2 1 | SALEABLE | | 345650003 |
| MX123 CONN ASSY 73 CKT GRY OPT0 KEY B/52 | 345661433 | C-HSG-B0 | G-CAP-0-P | TPA-B0 | RS | LS | MAL | CPA | MSEAL | RSEAL | 72 71 70 69 68 67 - 65 - 63 62 61 60 - 58 - 56 - 54 -<br>52 51 50 - - 47 - 45 44 43 42 41 40 - 38 - 36 - 34 -<br>- 31 30 - 28 27 26 25 24 - 22 - 20 19 - -<br>16 15 14 13 - 11 10 9 8 - 6 5 4 3 2 1 | SALEABLE | | 345650003 |
| MX123 CONN ASSY 73 CKT GRY OPT0 KEY B/51 | 345661443 | C-HSG-B0 | G-CAP-0-P | TPA-B0 | RS | LS | MAL | CPA | MSEAL | RSEAL | 72 71 70 - - 67 - 65 64 63 62 61 60 - 58 - 56 - 54 -<br>52 51 50 - - 47 - 45 44 43 42 41 40 - 38 - 36 - 34 -<br>32 31 30 - 28 27 26 25 24 - 22 - 20 19 18 -<br>16 15 14 13 - - - 9 8 - 6 5 4 3 2 1 | SALEABLE | | 345650003 |
| MX123 CONN ASSY 73 CKT GRY OPT0 KEY B/47 | 345661453 | C-HSG-B0 | G-CAP-0-P | TPA-B0 | RS | LS | MAL | CPA | MSEAL | RSEAL | 72 71 70 69 68 67 - - - 63 - 61 60 - 58 - 56 - 54 -<br>52 51 50 - - - 46 45 - 43 - 41 40 - 38 - 36 - 34 -<br>32 31 30 - - 27 - 25 24 - 22 - 20 19 18 -<br>16 15 14 13 - 11 10 - 8 - 6 5 4 3 2 1 | SALEABLE | | 345650003 |
| MX123 CONN ASSY 73 CKT BLK OPT0 KEY A/31 | 345661463 | C-HSG-A0 | G-CAP-0-P | TPA-A0 | RS | LS | MAL | CPA | MSEAL | RSEAL | 72 71 70 - - 67 66 - - - - - - - - 57 - 55 54 53<br>- 51 - - - - 46 - 44 43 42 - 40 39 - - - 35 - -<br>- - - - - - 26 25 - - 22 21 - - - -<br>- 15 14 - - - - - 8 7 6 5 4 3 2 - | SALEABLE | | 345650003 |

| ASSEMBLY DESCRIPTION | ASSEMBLY PART NUMBER | CONNECTOR HOUSING | GROMMET CAP | TPA | RIGHT SLIDE | LEFT SLIDE | MATE ASSIST LEVER | CPA | MAT SEAL | RING SEAL | BLOCKED TERMINALS<br>CAVITY WITH A NUMBER INDICATES BLOCKED TERMINAL POSITION<br>CAVITY WITHOUT A NUMBER INDICATES OPEN TERMINAL POSITION | STATUS | COMMENTS | INTEGRAL COMPONENTS SOLD SEPARATELY<br>DRESS COVER |
|---|---|---|---|---|---|---|---|---|---|---|---|---|---|---|
| MX123 CONN ASSY 73 CKT BLK OPT0 KEY A/32 | 345661473 | C-HSG-A0 | G-CAP-0-P | TPA-A0 | RS | LS | MAL | CPA | MSEAL | RSEAL | - - 70 - - - - 65 - - - 61 60 - 58 57 56 55 - -<br>- 51 50 - - 47 - 45 - - - 41 40 - 38 37 36 35 - -<br>- - 31 30 - 28 - 26 25 - - 22 21 20 19 18 -<br>16 15 - - - - 10 - - - - - - - - - | SALEABLE | | 345650003 |
| MX123 CONN ASSY 73 CKT BLK OPT0 KEY A/33 | 345661483 | C-HSG-A0 | G-CAP-0-P | TPA-A0 | RS | LS | MAL | CPA | MSEAL | RSEAL | - - 70 - - 67 66 - - - 62 - 60 - - 57 - 55 54 53<br>- 51 - - 48 - 46 45 44 43 42 - 40 39 - - - 35 - -<br>- - - - - - 26 25 - - 22 21 - - - -<br>- 15 14 - - - - - 8 7 6 5 4 3 2 - | SALEABLE | | 345650003 |
| MX123 CONN ASSY 73 CKT GRY OPT0 KEY B/49 | 345661493 | C-HSG-B0 | G-CAP-0-P | TPA-B0 | RS | LS | MAL | CPA | MSEAL | RSEAL | 72 71 70 69 - 67 66 65 64 63 62 61 60 - - - 56 - 54 -<br>52 51 50 - - 47 - 45 44 43 42 41 40 - - - 36 - 34 -<br>32 31 30 - 28 27 26 25 24 - - - 20 19 - -<br>16 15 14 13 - - - 9 8 - 6 5 4 3 2 1 | SALEABLE | | 345650003 |
| MX123 CONN ASSY 73 CKT BLU OPT9 KEY C/73 | 345661503 | C-HSG-C9 | G-CAP-9-P | TPA-C9 | RS | LS | MAL | CPA | MSEAL | RSEAL | - - - - - - - - - - - - - - - - - - - - -<br>- - - - - - - - - - - - - - - - - - - - -<br>- - - - - - - - - - - - - - - - - - - - -<br>- - - - - - - - - - - - - - - - - - - - - | SALEABLE | | 345650003 |
| MX123 CONN ASSY 73 CKT GRY OPT0 KEY B/55 | 345661513 | C-HSG-B0 | G-CAP-0-P | TPA-B0 | RS | LS | MAL | CPA | MSEAL | RSEAL | 72 71 70 69 68 67 66 - 64 63 62 61 60 - 58 - 56 - 54 -<br>52 51 50 - - 47 - 45 44 43 42 41 40 - 38 - 36 - 34 -<br>32 31 30 - 28 27 26 25 24 - 22 - 20 19 18 -<br>16 15 14 13 - 11 10 9 8 - 6 5 4 3 2 1 | SALEABLE | | 345650003 |
| MX123 CONN ASSY 73 CKT BLK OPT0 KEY A/34 | 345661523 | C-HSG-A0 | G-CAP-0-P | TPA-A0 | RS | LS | MAL | CPA | MSEAL | RSEAL | 72 71 - - - 67 66 - - 63 62 61 60 - - 57 - 55 - 53<br>- 51 - - 48 - 46 45 44 43 - - 40 39 - - - 35 - 33<br>- - - - - - - 25 24 - 22 21 - - - -<br>- 15 14 - - - - - - 7 6 5 4 3 2 - | SALEABLE | | 345650003 |
| MX123 CONN ASSY 73 CKT BLK OPT0 KEY A/28 | 345661533 | C-HSG-A0 | G-CAP-0-P | TPA-A0 | RS | LS | MAL | CPA | MSEAL | RSEAL | - - - - - 67 66 - - - 62 - 60 - - - - 55 54 53<br>- - - - 48 - 46 45 44 43 42 - 40 39 - - - 35 - -<br>- - - - - - 26 25 - - 22 21 - - - -<br>- 15 14 - - - - - 8 7 6 5 4 - - - | SALEABLE | | 345650003 |
| MX123 CONN ASSY 73 CKT GRY OPT0 KEY B/53 | 345661543 | C-HSG-B0 | G-CAP-0-P | TPA-B0 | RS | LS | MAL | CPA | MSEAL | RSEAL | 72 71 70 - - 67 - 65 64 63 62 61 60 - 58 - 56 - 54 -<br>52 51 50 - - 47 - 45 44 43 42 41 40 - 38 - 36 - 34 -<br>32 31 30 - 28 27 26 25 24 - 22 - 20 19 18 17<br>16 15 14 13 12 - - 9 8 - 6 5 4 3 2 1 | SALEABLE | | 345650003 |
| MX123 CONN ASSY 73 CKT BLK OPT0 KEY A/73 | 345661553 | C-HSG-A0 | G-CAP-0-P | TPA-A0 | RS | LS | MAL | CPA | MSEAL | RSEAL | 72 71 70 69 68 67 66 65 64 63 62 61 60 59 58 57 56 55 54 53<br>52 51 50 49 48 47 46 45 44 43 42 41 40 39 38 37 36 35 34 33<br>32 31 30 29 28 27 26 25 24 23 22 21 20 19 18 17<br>16 15 14 13 12 11 10 9 8 7 6 5 4 3 2 1 | SALEABLE | | 345650003 |
| MX123 CONN ASSY 73 CKT BLK OPT9 KEY A/73 | 345661563 | C-HSG-A9 | G-CAP-9-P | TPA-A9 | RS | LS | MAL | CPA | MSEAL | RSEAL | 72 71 70 69 68 67 66 65 64 63 62 61 60 59 58 57 56 55 54 53<br>52 51 50 49 48 47 46 45 44 43 42 41 40 39 38 37 36 35 34 33<br>32 31 30 29 28 27 26 25 24 23 22 21 20 19 18 17<br>16 15 14 13 12 11 10 9 8 7 6 5 4 3 2 1 | SALEABLE | | 345650003 |
| MX123 CONN ASSY 73 CKT BLK OPT0 KEY A/35 | 345661583 | C-HSG-A0 | G-CAP-0-P | TPA-A0 | RS | LS | MAL | CPA | MSEAL | RSEAL | 72 71 - 69 68 - - - 64 63 62 - 60 59 - - 56 - - 53<br>52 51 50 - 48 - 46 - - - - - 40 - 38 - 36 35 - 33<br>- 31 - 29 28 - 26 - - 23 22 - - - - -<br>16 - 14 - 12 - 10 - - 7 - - 4 - 2 - | SALEABLE | | 345650003 |
| MX123 CONN ASSY 73 CKT GRY OPT0 KEY B/30 | 345661593 | C-HSG-B0 | G-CAP-0-P | TPA-B0 | RS | LS | MAL | CPA | MSEAL | RSEAL | 72 71 70 69 68 - 66 - 64 63 62 - - - - - 56 55 - -<br>52 - - - - - - - 44 - - 41 - - 38 - 36 35 - -<br>- - - 29 28 27 - 25 - - - - - 19 18 17<br>- - - - 12 11 - - - - - - - 3 2 1 | SALEABLE | | 345650003 |

| ASSEMBLY DESCRIPTION | ASSEMBLY PART NUMBER | CONNECTOR HOUSING | GROMMET CAP | TPA | RIGHT SLIDE | LEFT SLIDE | MATE ASSIST LEVER | CPA | MAT SEAL | RING SEAL | BLOCKED TERMINALS<br>CAVITY WITH A NUMBER INDICATES BLOCKED TERMINAL POSITION<br>CAVITY WITHOUT A NUMBER INDICATES OPEN TERMINAL POSITION | STATUS | COMMENTS | INTEGRAL COMPONENTS SOLD SEPARATELY<br>DRESS COVER |
|---|---|---|---|---|---|---|---|---|---|---|---|---|---|---|
| MX123 CONN ASSY 73 CKT GRY OPT0 KEY B/51 | 345661623 | C-HSG-B0 | G-CAP-0-P | TPA-B0 | RS | LS | MAL | CPA | MSEAL | RSEAL | 72 71 70 69 68 67 - - 64 63 - 61 60 - 58 - 56 - 54 -<br>52 51 50 49 - - 46 45 44 43 - 41 40 - 38 - 36 - 34 -<br>- 32 31 30 - 28 27 - 25 24 - 22 - 20 19 18 -<br>- 16 15 14 13 - 11 10 - 8 - 6 5 4 3 2 1 | SALEABLE | | 345650003 |
| MX123 CONN ASSY 73 CKT GRY OPT0 KEY B/46 | 345661633 | C-HSG-B0 | G-CAP-0-P | TPA-B0 | RS | LS | MAL | CPA | MSEAL | RSEAL | 72 71 70 - - 67 - 65 64 63 62 61 60 - 58 - 56 - 54 -<br>52 51 - 49 - - 46 45 44 43 42 41 40 - 38 - 36 - 34 -<br>- 32 31 30 - 28 27 26 25 24 - 22 - 20 19 18 -<br>- 16 - 14 13 - - - 9 8 - - - - - 2 1 | SALEABLE | | 345650003 |
| MX123 CONN ASSY 73 CKT GRY OPT0 KEY B/46 | 345661643 | C-HSG-B0 | G-CAP-0-P | TPA-B0 | RS | LS | MAL | CPA | MSEAL | RSEAL | 72 71 70 - - 67 - 65 64 63 62 61 60 - 58 - 56 - 54 -<br>52 51 - 49 - 47 - 45 44 43 42 41 40 - 38 - 36 - 34 -<br>- 32 31 30 - 28 27 26 25 24 - 22 - 20 19 18 -<br>- 16 - 14 13 - - - 9 8 - - - - - 2 1 | SALEABLE | | 345650003 |
| MX123 CONN ASSY 73 CKT GRY OPT0 KEY B/50 | 345661653 | C-HSG-B0 | G-CAP-0-P | TPA-B0 | RS | LS | MAL | CPA | MSEAL | RSEAL | 72 71 70 69 68 67 - 65 64 63 62 61 60 - 58 - 56 - 54 -<br>52 51 - 49 - 47 - 45 44 43 42 41 40 - 38 - 36 - 34 -<br>- 32 31 30 - 28 27 26 25 24 - 22 - 20 19 18 -<br>- 16 - 14 13 - 11 10 9 8 - - - - - 2 1 | SALEABLE | | 345650003 |
| MX123 CONN ASSY 73 CKT GRY OPT0 KEY B/52 | 345661663 | C-HSG-B0 | G-CAP-0-P | TPA-B0 | RS | LS | MAL | CPA | MSEAL | RSEAL | 72 71 70 69 68 67 - 65 64 63 62 61 60 - 58 - 56 - 54 -<br>52 51 - 49 - 47 - 45 44 43 42 41 40 - 38 - 36 - 34 -<br>- 32 31 30 - 28 27 26 25 24 - 22 - 20 19 18 17<br>- 16 - 14 13 12 11 10 9 8 - - - - - 2 1 | SALEABLE | | 345650003 |
| MX123 CONN ASSY 73 CKT BLK OPT0 KEY A/22 | 345661673 | C-HSG-A0 | G-CAP-0-P | TPA-A0 | RS | LS | MAL | CPA | MSEAL | RSEAL | - - - - - - - - - - - 61 - - 58 57 56 - - -<br>- 51 50 - - 47 46 - - - - - - - - 38 37 36 - - -<br>- - 31 30 - 28 - 26 - - - 22 21 20 - - -<br>- - 15 14 - - - 10 - - - - - - - - - | SALEABLE | | 345650003 |
| MX123 CONN ASSY 73 CKT GRY OPT0 KEY B/39 | 345661683 | C-HSG-B0 | G-CAP-0-P | TPA-B0 | RS | LS | MAL | CPA | MSEAL | RSEAL | 72 71 70 69 68 - - 65 64 - 62 61 60 - - - - - 54 -<br>52 51 - - - 47 46 45 44 - 42 41 40 - - - - - 34 -<br>- 32 31 30 - 28 - 26 25 24 - - - 20 19 18 17<br>- - - - 12 11 10 9 - - - - - - 2 1 | SALEABLE | | 345650003 |
| MX123 CONN ASSY 73 CKT GRY OPT0 KEY B/53 | 345661693 | C-HSG-B0 | G-CAP-0-P | TPA-B0 | RS | LS | MAL | CPA | MSEAL | RSEAL | 72 71 70 69 68 67 - 65 - 63 62 61 60 - 58 - 56 - 54 -<br>52 51 50 - - 47 - 45 44 43 42 41 40 - 38 - 36 - 34 -<br>- 31 30 - 28 27 26 25 24 - 22 - 20 19 18 -<br>16 15 14 13 - 11 10 9 8 - 6 5 4 3 2 1 | SALEABLE | | 345650003 |
| MX123 CONN ASSY 73 CKT GRY OPT0 KEY B/21 | 345661713 | C-HSG-B0 | G-CAP-0-P | TPA-B0 | RS | LS | MAL | CPA | MSEAL | RSEAL | 72 - - 69 - 67 - - - - 62 61 - - - - - - - -<br>52 - - - - 47 - - 44 - 42 - - - - - - 34 -<br>- - - 29 28 27 26 25 - - - 21 - - 18 17<br>- - 14 - - - - - - - - - - - - - 1 | SALEABLE | | 345650003 |
| MX123 CONN ASSY 73 CKT GRY OPT0 KEY B/28 | 345661723 | C-HSG-B0 | G-CAP-0-P | TPA-B0 | RS | LS | MAL | CPA | MSEAL | RSEAL | 72 - - 69 - 67 - - 64 63 62 61 - - - - 56 55 - -<br>52 - - - - 47 - - 44 - 42 - - - - - - 34 -<br>- - - 29 28 27 26 25 - - - 21 - 19 18 17<br>- - 14 - - - - - - - - - - - 3 2 1 | SALEABLE | | 345650003 |
| MX123 CONN ASSY 73 CKT BLK OPT0 KEY A/35 | 345661733 | C-HSG-A0 | G-CAP-0-P | TPA-A0 | RS | LS | MAL | CPA | MSEAL | RSEAL | 72 71 - 69 - - - - 64 63 62 61 60 59 - - 56 - 54 53<br>52 51 50 - 48 - 46 45 - - - - 40 - 38 - 36 - 34 33<br>- 31 - 29 28 - 26 - - 23 22 - - - - -<br>- - 14 - 12 11 - - - 7 - - 4 - - - | SALEABLE | | 345650003 |
| MX123 CONN ASSY 73 CKT BLK OPT0 KEY A/36 | 345661743 | C-HSG-A0 | G-CAP-0-P | TPA-A0 | RS | LS | MAL | CPA | MSEAL | RSEAL | 72 71 - 69 68 - - - 64 63 62 61 60 59 - - 56 - 54 53<br>52 51 50 - 48 - 46 45 - - - - 40 - 38 - 36 - 34 33<br>- 31 - 29 28 - 26 - - 23 22 - - - - -<br>- - 14 - 12 11 - - - 7 - - 4 - - - | SALEABLE | | 345650003 |

| ASSEMBLY DESCRIPTION | ASSEMBLY PART NUMBER | CONNECTOR HOUSING | GROMMET CAP | TPA | RIGHT SLIDE | LEFT SLIDE | MATE ASSIST LEVER | CPA | MAT SEAL | RING SEAL | BLOCKED TERMINALS<br>CAVITY WITH A NUMBER INDICATES BLOCKED TERMINAL POSITION<br>CAVITY WITHOUT A NUMBER INDICATES OPEN TERMINAL POSITION | STATUS | COMMENTS | INTEGRAL COMPONENTS SOLD SEPARATELY<br>DRESS COVER |
|---|---|---|---|---|---|---|---|---|---|---|---|---|---|---|
| MX123 CONN ASSY 73 CKT BLK OPT0 KEY A/40 | 345661753 | C-HSG-A0 | G-CAP-0-P | TPA-A0 | RS | LS | MAL | CPA | MSEAL | RSEAL | 72 71 - 69 68 - - - 64 63 62 61 60 59 - - 56 - 54 53<br>52 51 50 - 48 - 46 45 - - - - 40 - 38 - 36 - 34 33<br>- - 31 30 29 28 - 26 - - 23 22 - - - - -<br>- 16 - 14 - 12 11 10 - - 7 - - 4 - 2 - | SALEABLE | | 345650003 |
| MX123 CONN ASSY 73 CKT GRY OPT0 KEY B/31 | 345661763 | C-HSG-B0 | G-CAP-0-P | TPA-B0 | RS | LS | MAL | CPA | MSEAL | RSEAL | 72 71 70 69 68 - 66 - 64 63 62 - - - - - 56 55 - -<br>52 - - - - - - - 44 - 42 41 - - 38 - 36 35 - -<br>- - - 29 28 27 - 25 - - - - - 19 18 17<br>- - - - 12 11 - - - - - - - 3 2 1 | SALEABLE | | 345650003 |
| MX123 CONN ASSY 73 CKT BLU OPT0 KEY C/41 | 345661773 | C-HSG-C0 | G-CAP-0-P | TPA-C0 | RS | LS | MAL | CPA | MSEAL | RSEAL | - 71 - 69 68 - - 65 64 - - 61 60 - 58 - 56 55 54 -<br>- - 50 49 48 47 - 45 - 43 - 41 - - 38 37 36 35 - -<br>- 32 31 - 29 28 - - - 24 23 - - - 19 18 17<br>- 16 - - 13 12 11 - - 8 7 - - - 3 2 1 | SALEABLE | | 345650003 |
| MX123 CONN ASSY 73 CKT BLU OPT0 KEY C/42 | 345661783 | C-HSG-C0 | G-CAP-0-P | TPA-C0 | RS | LS | MAL | CPA | MSEAL | RSEAL | - 71 - 69 68 - - 65 64 - - 61 60 - 58 - 56 55 54 -<br>- - 50 49 48 47 - 45 - 43 - 41 - - 38 37 36 35 - -<br>- 32 31 - 29 28 27 - - 24 23 - - - 19 18 17<br>- 16 - - 13 12 11 - - 8 7 - - - 3 2 1 | SALEABLE | | 345650003 |
| MX123 CONN ASSY 73 CKT BLK OPT0 KEY A/38 | 345661793 | C-HSG-A0 | G-CAP-0-P | TPA-A0 | RS | LS | MAL | CPA | MSEAL | RSEAL | 72 71 70 - 68 67 66 65 64 - - - 60 59 - - - - - -<br>- - 50 - 48 47 46 45 - - - - 40 39 38 - - - - -<br>- - 31 30 - - - - 25 24 23 22 21 20 - - 17<br>- - 15 14 - - - - 9 8 7 6 5 4 - 2 1 | SALEABLE | | 345650003 |
| MX123 CONN ASSY 73 CKT NAT OPT9 KEY F/73 | 345661803 | C-HSG-F9 | G-CAP-9-P | TPA-F9 | RS | LS | MAL | CPA | MSEAL | RSEAL | - - - - - - - - - - - - - - - - - - - - -<br>- - - - - - - - - - - - - - - - - - - - -<br>- - - - - - - - - - - - - - - - - - - - -<br>- - - - - - - - - - - - - - - - - - - - - | SALEABLE | | 345650003 |
| MX123 CONN ASSY 73 CKT GRY OPT0 KEY B/24 | 345661813 | C-HSG-B0 | G-CAP-0-P | TPA-B0 | RS | LS | MAL | CPA | MSEAL | RSEAL | - - - 69 - - - 65 64 63 - - - - - - - - - -<br>- - - 49 - - - 45 44 43 - - - - - - - - - -<br>- - - - - - - - - - 22 21 20 19 18 17<br>- - - - 12 11 - - - 7 6 5 4 3 2 1 | SALEABLE | | 345650003 |
| MX123 CONN ASSY 73 CKT BLK OPT0 KEY A/25 | 345661823 | C-HSG-A0 | G-CAP-0-P | TPA-A0 | RS | LS | MAL | CPA | MSEAL | RSEAL | - - - - - 67 - - - 63 62 - 60 - - 57 - 55 - -<br>- 51 - - 48 - 46 45 44 43 - - 40 39 - - - 35 - -<br>- - - - - - - 25 - - - - - - - - -<br>- 15 14 - - - - - - 7 6 5 4 3 2 - | SALEABLE | | 345650003 |
| MX123 CONN ASSY 73 CKT BLK OPT0 KEY A/38 | 345661833 | C-HSG-A0 | G-CAP-0-P | TPA-A0 | RS | LS | MAL | CPA | MSEAL | RSEAL | 72 71 70 69 - 67 66 - 64 - 62 - 60 - - 57 - 55 54 53<br>- 51 - 49 48 - 46 45 44 43 42 - 40 39 - - - 35 - -<br>- - - - - - 26 - - - 22 21 - - - -<br>- 15 14 - - - - 9 8 7 6 5 4 3 2 - | SALEABLE | | 345650003 |
| MX123 CONN ASSY 73 CKT BLK OPT0 KEY A/33 | 345661843 | C-HSG-A0 | G-CAP-0-P | TPA-A0 | RS | LS | MAL | CPA | MSEAL | RSEAL | 72 71 70 69 - 67 66 - 64 - 62 - 60 - - 57 - 55 54 -<br>- 51 - 49 48 - 46 45 44 43 42 - 40 39 - - - - - -<br>- - - - - - 26 25 - - - - - - - -<br>- - - - - - - 9 8 7 6 5 4 3 2 - | SALEABLE | | 345650003 |
| MX123 CONN ASSY 73 CKT BLK OPT0 KEY A/22 | 345661853 | C-HSG-A0 | G-CAP-0-P | TPA-A0 | RS | LS | MAL | CPA | MSEAL | RSEAL | - 71 - - - - 66 - 64 - 62 - - 59 58 - - - - -<br>- 51 - - - - 46 45 - - 42 - - 39 38 - - - - -<br>32 31 - - - 27 26 - - 23 22 - - - - -<br>- - 14 13 12 - - - - - - - - - - - | SALEABLE | | 345650003 |
| MX123 CONN ASSY 73 CKT GRY OPT0 KEY B/56 | 345661863 | C-HSG-B0 | G-CAP-0-P | TPA-B0 | RS | LS | MAL | CPA | MSEAL | RSEAL | 72 71 70 69 - - - - - - 62 61 60 59 58 57 56 55 54 53<br>52 51 50 49 48 47 - - 44 - 42 41 40 39 38 37 36 35 34 33<br>- 31 - - - - 26 25 24 23 22 21 20 19 18 -<br>- 15 14 13 12 11 - 9 8 7 6 5 4 3 2 1 | SALEABLE | | 345650003 |

| ASSEMBLY DESCRIPTION | ASSEMBLY PART NUMBER | CONNECTOR HOUSING | GROMMET CAP | TPA | RIGHT SLIDE | LEFT SLIDE | MATE ASSIST LEVER | CPA | MAT SEAL | RING SEAL | BLOCKED TERMINALS<br>CAVITY WITH A NUMBER INDICATES BLOCKED TERMINAL POSITION<br>CAVITY WITHOUT A NUMBER INDICATES OPEN TERMINAL POSITION | STATUS | COMMENTS | INTEGRAL COMPONENTS SOLD SEPARATELY<br>DRESS COVER |
|---|---|---|---|---|---|---|---|---|---|---|---|---|---|---|
| MX123 CONN ASSY 73 CKT BLU OPT0 KEY C/40 | 345661873 | C-HSG-C0 | G-CAP-0-P | TPA-C0 | RS | LS | MAL | CPA | MSEAL | RSEAL | - 71 - 69 68 - - 65 64 - - 61 60 - 58 - 56 55 54 -<br>- - 50 49 48 47 - 45 - 43 - 41 - - 38 37 36 35 - -<br>- - 31 - 29 28 - - - 24 23 - - - 19 18 17<br>- 16 - - 13 12 11 - - 8 7 - - - 3 2 1 | SALEABLE | | 345650003 |
| MX123 CONN ASSY 73 CKT BLK OPT0 KEY A/34 | 345661883 | C-HSG-A0 | G-CAP-0-P | TPA-A0 | RS | LS | MAL | CPA | MSEAL | RSEAL | 72 71 - 69 - - - - 64 63 62 61 60 59 - - 56 - 54 53<br>52 51 50 - 48 - 46 45 - - - - - - 38 - 36 - 34 33<br>- 31 - 29 28 - 26 - - 23 22 - - - - - -<br>- - 14 - 12 11 - - - 7 - - 4 - - - | SALEABLE | | 345650003 |
| MX123 CONN ASSY 73 CKT BLU OPT0 KEY C/42 | 345661893 | C-HSG-C0 | G-CAP-0-P | TPA-C0 | RS | LS | MAL | CPA | MSEAL | RSEAL | - 71 - 69 68 67 - 65 64 - 62 61 60 - 58 - 56 55 54 -<br>- - 50 49 48 47 - 45 - 43 - 41 - - 38 37 36 35 - -<br>- - 31 - 29 28 - - - 24 23 - - - 19 18 17<br>- 16 - - 13 12 11 - - 8 7 - - - 3 2 1 | SALEABLE | | 345650003 |
| MX123 CONN ASSY 73 CKT GRY OPT0 KEY B/42 | 345661913 | C-HSG-B0 | G-CAP-0-P | TPA-B0 | RS | LS | MAL | CPA | MSEAL | RSEAL | - 71 - 69 - 67 - 65 64 63 62 61 - - 58 57 56 - - -<br>- 51 - 49 - 47 - 45 44 43 42 41 - - 38 37 36 - - -<br>- - - - - - - - - 23 22 21 20 19 18 17<br>- 15 14 13 12 11 - - - 7 6 5 4 3 2 1 | SALEABLE | | 345650003 |
| MX123 CONN ASSY 73 CKT BLK OPT0 KEY A/46 | 345661923 | C-HSG-A0 | G-CAP-0-P | TPA-A0 | RS | LS | MAL | CPA | MSEAL | RSEAL | 72 71 70 - 68 67 66 65 64 - 62 61 60 59 - 57 - - - -<br>- - 50 - 48 47 46 45 - - - - 40 39 38 37 - - - -<br>- 31 30 29 - 27 - 25 24 23 22 21 20 - - 17<br>- 15 14 13 - 11 - 9 8 7 6 5 4 - 2 1 | SALEABLE | | 345650003 |
| MX123 CONN ASSY 73 CKT BLK OPT0 KEY A/35 | 345661933 | C-HSG-A0 | G-CAP-0-P | TPA-A0 | RS | LS | MAL | CPA | MSEAL | RSEAL | 72 71 - 69 68 - - - 64 63 62 61 60 59 - - 56 - 54 53<br>52 51 50 - 48 - 46 45 - - - - - - 38 - 36 - 34 33<br>- 31 - 29 28 - 26 - - 23 22 - - - - - -<br>- - 14 - 12 11 - - - 7 - - 4 - - - | SALEABLE | | 345650003 |
| MX123 CONN ASSY 73 CKT BLK OPT0 KEY A/34 | 345661943 | C-HSG-A0 | G-CAP-0-P | TPA-A0 | RS | LS | MAL | CPA | MSEAL | RSEAL | 72 71 - 69 68 - - - 64 63 62 61 60 59 - - 56 - 54 53<br>52 - 50 - 48 - 46 45 - - - - - - 38 - 36 - 34 33<br>- 31 - 29 28 - 26 - - 23 22 - - - - - -<br>- - 14 - 12 11 - - - 7 - - 4 - - - | SALEABLE | | 345650003 |
| MX123 CONN ASSY 73 CKT BLU OPT0 KEY C/42 | 345661953 | C-HSG-C0 | G-CAP-0-P | TPA-C0 | RS | LS | MAL | CPA | MSEAL | RSEAL | - 71 - 69 68 67 - 65 64 - 62 61 60 - 58 - 56 55 54 -<br>- - 50 49 - - - 45 - 43 - 41 - - 38 37 36 35 - -<br>32 31 - 29 28 27 - - 24 23 - - - 19 18 17<br>- 16 - - 13 12 11 - - 8 7 - - - 3 2 1 | SALEABLE | | 345650003 |
| MX123 CONN ASSY 73 CKT BLU OPT0 KEY C/44 | 345661963 | C-HSG-C0 | G-CAP-0-P | TPA-C0 | RS | LS | MAL | CPA | MSEAL | RSEAL | - 71 - 69 68 67 - 65 64 - 62 61 60 - 58 - 56 55 54 -<br>- - 50 49 48 47 - 45 - 43 - 41 - - 38 37 36 35 - -<br>32 31 - 29 28 27 - - 24 23 - - - 19 18 17<br>- 16 - - 13 12 11 - - 8 7 - - - 3 2 1 | SALEABLE | | 345650003 |
| MX123 CONN ASSY 73 CKT BLK OPT0 KEY A/43 | 345661973 | C-HSG-A0 | G-CAP-0-P | TPA-A0 | RS | LS | MAL | CPA | MSEAL | RSEAL | 72 71 70 - 68 67 66 65 64 - 62 61 60 59 58 57 - - - -<br>- - 50 - 48 47 46 45 - - - - 40 39 38 37 - - - -<br>- 31 30 29 - 27 - 25 24 - 22 - 20 - - 17<br>- 15 14 13 - 11 - 9 - 7 6 - 4 - 2 1 | SALEABLE | | 345650003 |
| MX123 CONN ASSY 73 CKT GRY OPT0 KEY B/73 | 345661983 | C-HSG-B0 | G-CAP-0-P | TPA-B0 | RS | LS | MAL | CPA | MSEAL | RSEAL | 72 71 70 69 68 67 66 65 64 63 62 61 60 59 58 57 56 55 54 53<br>52 51 50 49 48 47 46 45 44 43 42 41 40 39 38 37 36 35 34 33<br>32 31 30 29 28 27 26 25 24 23 22 21 20 19 18 17<br>16 15 14 13 12 11 10 9 8 7 6 5 4 3 2 1 | SALEABLE | | 345650003 |
| MX123 CONN ASSY 73 CKT BLU OPT0 KEY C/73 | 345661993 | C-HSG-C0 | G-CAP-0-P | TPA-C0 | RS | LS | MAL | CPA | MSEAL | RSEAL | 72 71 70 69 68 67 66 65 64 63 62 61 60 59 58 57 56 55 54 53<br>52 51 50 49 48 47 46 45 44 43 42 41 40 39 38 37 36 35 34 33<br>32 31 30 29 28 27 26 25 24 23 22 21 20 19 18 17<br>16 15 14 13 12 11 10 9 8 7 6 5 4 3 2 1 | SALEABLE | | 345650003 |

| ASSEMBLY DESCRIPTION | ASSEMBLY PART NUMBER | CONNECTOR HOUSING | GROMMET CAP | TPA | RIGHT SLIDE | LEFT SLIDE | MATE ASSIST LEVER | CPA | MAT SEAL | RING SEAL | BLOCKED TERMINALS<br>CAVITY WITH A NUMBER INDICATES BLOCKED TERMINAL POSITION<br>CAVITY WITHOUT A NUMBER INDICATES OPEN TERMINAL POSITION | STATUS | COMMENTS | INTEGRAL COMPONENTS SOLD SEPARATELY<br>DRESS COVER |
|---|---|---|---|---|---|---|---|---|---|---|---|---|---|---|
| MX123 CONN ASSY 73 CKT BLK OPT0 KEY A/31 | 345662013 | C-HSG-A0 | G-CAP-0-P | TPA-A0 | RS | LS | MAL | CPA | MSEAL | RSEAL | 72 - - 69 68 67 66 - 64 63 62 61 - - - - 56 55 - -<br>52 - - - - 47 - - 44 - 42 - - - 38 - - - 34 -<br>- - - - 29 28 27 26 25 - - - 21 - 19 18 17<br>- - 14 - - - - - - - - - - - 3 2 1 | SALEABLE | | 345650003 |
| MX123 CONN ASSY 73 CKT BLK OPT0 KEY A/38 | 345662023 | C-HSG-A0 | G-CAP-0-P | TPA-A0 | RS | LS | MAL | CPA | MSEAL | RSEAL | 72 71 - 69 - - - - 64 63 62 61 60 59 - - 56 - 54 53<br>52 51 50 - 48 - 46 45 - - - - 40 - 38 - 36 - 34 33<br>- 31 - 29 28 - 26 - - 23 22 - - - - -<br>16 - 14 - 12 11 10 - - 7 - - 4 - 2 - | SALEABLE | | 345650003 |
| MX123 CONN ASSY 73 CKT BLK OPT0 KEY A/27 | 345662033 | C-HSG-A0 | G-CAP-0-P | TPA-A0 | RS | LS | MAL | CPA | MSEAL | RSEAL | 72 - - 69 68 67 66 - - 63 62 61 - - - - 56 - - -<br>52 - - - - 47 - - 44 - 42 - - - 38 - - - 34 -<br>- - - 29 28 27 26 25 - - - 21 - 19 18 17<br>- - 14 - - - - - - - - - - - - - - 1 | SALEABLE | | 345650003 |
| MX123 CONN ASSY 73 CKT BLK OPT0 KEY A/39 | 345662043 | C-HSG-A0 | G-CAP-0-P | TPA-A0 | RS | LS | MAL | CPA | MSEAL | RSEAL | 72 71 - 69 68 - - - 64 63 62 61 60 59 - - 56 - 54 53<br>52 51 50 - 48 - 46 45 - - - - 40 - 38 - 36 - 34 33<br>- 31 - 29 28 - 26 - - 23 22 - - - - -<br>16 - 14 - 12 11 10 - - 7 - - 4 - 2 - | SALEABLE | | 345650003 |
| MX123 CONN ASSY 73 CKT GRY OPT0 KEY B/41 | 345662053 | C-HSG-B0 | G-CAP-0-P | TPA-B0 | RS | LS | MAL | CPA | MSEAL | RSEAL | 72 71 - 69 - - - - 64 63 62 61 60 59 - - 56 - 54 53<br>52 51 50 - 48 - 46 45 - - - - 40 - 38 - 36 35 34 33<br>- 31 - 29 28 - 26 - - - 22 - - - - 17<br>16 15 14 - 12 11 10 9 - 7 - - 4 - 2 - | SALEABLE | | 345650003 |
| MX123 CONN ASSY 73 CKT BLK OPT0 KEY A/37 | 345662093 | C-HSG-A0 | G-CAP-0-P | TPA-A0 | RS | LS | MAL | CPA | MSEAL | RSEAL | 72 71 70 69 - 67 66 - 64 - 62 - 60 - - 57 - 55 54 53<br>- 51 - 49 48 - 46 45 44 43 42 - 40 39 - - - 35 - -<br>- - - - - - 26 - - - 22 21 - - - -<br>- 15 14 - - - - - 8 7 6 5 4 3 2 - | SALEABLE | | 345650003 |
| MX123 CONN ASSY 73 CKT GRY OPT0 KEY B/27 | 345662133 | C-HSG-B0 | G-CAP-0-P | TPA-B0 | RS | LS | MAL | CPA | MSEAL | RSEAL | 72 - - 69 68 67 66 - - 63 62 61 - - - - 56 - - -<br>52 - - - - 47 - - 44 - 42 - - - 38 - - - 34 -<br>- - - 29 28 27 26 25 - - - 21 - 19 18 17<br>- - 14 - - - - - - - - - - - - - - 1 | SALEABLE | | 345650003 |
| MX123 CONN ASSY 73 CKT GRY OPT0 KEY B/31 | 345662143 | C-HSG-B0 | G-CAP-0-P | TPA-B0 | RS | LS | MAL | CPA | MSEAL | RSEAL | 72 - - 69 68 67 66 - 64 63 62 61 - - - - 56 55 - -<br>52 - - - - 47 - - 44 - 42 - - - 38 - - - 34 -<br>- - - 29 28 27 26 25 - - - 21 - 19 18 17<br>- - 14 - - - - - - - - - - - 3 2 1 | SALEABLE | | 345650003 |
| MX123 CONN ASSY 73 CKT BLK OPT0 KEY A/41 | 345662153 | C-HSG-A0 | G-CAP-0-P | TPA-A0 | RS | LS | MAL | CPA | MSEAL | RSEAL | 72 71 - 69 - - - - 64 63 62 61 60 59 - - 56 - 54 53<br>52 51 50 - 48 - 46 45 - - - - 40 - 38 - 36 35 34 33<br>- 31 - 29 28 - 26 - - - 22 - - - - 17<br>16 15 14 - 12 11 10 9 - 7 - - 4 - 2 - | SALEABLE | | 345650003 |
| MX123 CONN ASSY 73 CKT BLK OPT0 KEY A/40 | 345662163 | C-HSG-A0 | G-CAP-0-P | TPA-A0 | RS | LS | MAL | CPA | MSEAL | RSEAL | 72 71 - 69 68 - - 65 64 63 62 - 60 59 - 57 56 - - 53<br>52 51 50 - 48 - 46 - - - - - 40 - 38 - 36 35 - 33<br>- 31 30 29 28 - 26 25 - 23 22 - - - - -<br>16 - 14 - 12 - 10 - 8 7 - - 4 - 2 - | SALEABLE | | 345650003 |
| MX123 CONN ASSY 73 CKT BLK OPT0 KEY A/36 | 345662173 | C-HSG-A0 | G-CAP-0-P | TPA-A0 | RS | LS | MAL | CPA | MSEAL | RSEAL | 72 71 - 69 68 - - - 64 63 62 - 60 59 - 57 56 - - 53<br>52 51 50 - 48 - 46 - - - - - 40 - 38 - 36 35 - 33<br>- 31 - 29 28 - 26 - - 23 22 - - - - -<br>16 - 14 - 12 - 10 - - 7 - - 4 - 2 - | SALEABLE | | 345650003 |
| MX123 CONN ASSY 73 CKT BLK OPT0 KEY A/44 | 345662183 | C-HSG-A0 | G-CAP-0-P | TPA-A0 | RS | LS | MAL | CPA | MSEAL | RSEAL | 72 71 - 69 68 - - 65 64 63 62 61 60 59 - - 56 - 54 53<br>52 51 50 - 48 - 46 45 - - - - 40 - 38 - 36 35 34 33<br>- 31 30 29 28 - 26 25 - 23 22 - - - - -<br>16 - 14 - 12 11 10 - 8 7 - - 4 - 2 - | SALEABLE | | 345650003 |

| ASSEMBLY DESCRIPTION | ASSEMBLY PART NUMBER | CONNECTOR HOUSING | GROMMET CAP | TPA | RIGHT SLIDE | LEFT SLIDE | MATE ASSIST LEVER | CPA | MAT SEAL | RING SEAL | BLOCKED TERMINALS<br>CAVITY WITH A NUMBER INDICATES BLOCKED TERMINAL POSITION<br>CAVITY WITHOUT A NUMBER INDICATES OPEN TERMINAL POSITION | STATUS | COMMENTS | INTEGRAL COMPONENTS SOLD SEPARATELY<br>DRESS COVER |
|---|---|---|---|---|---|---|---|---|---|---|---|---|---|---|
| MX123 CONN ASSY 73 CKT BLK OPT0 KEY A/40 | 345662193 | C-HSG-A0 | G-CAP-0-P | TPA-A0 | RS | LS | MAL | CPA | MSEAL | RSEAL | 72 71 - 69 68 - - - 64 63 62 61 60 59 - - 56 - 54 53<br>52 51 50 - 48 - 46 45 - - - - 40 - 38 - 36 35 34 33<br>- - 31 - 29 28 - 26 - - 23 22 - - - - -<br>- 16 - 14 - 12 11 10 - - 7 - - 4 - 2 - | SALEABLE | | 345650003 |
| MX123 CONN ASSY 73 CKT BLK OPT0 KEY A/24 | 345662223 | C-HSG-A0 | G-CAP-0-P | TPA-A0 | RS | LS | MAL | CPA | MSEAL | RSEAL | - - - - - - - 65 - - - 61 - - 58 57 56 - - -<br>- 51 50 - - 47 - 45 - - - 41 - - 38 37 36 - - -<br>- 31 30 - 28 - 26 25 - - 22 21 20 - - -<br>- 15 - - - - 10 - - - - - - - - - | SALEABLE | | 345650003 |
| MX123 CONN ASSY 73 CKT BLK OPT0 KEY A/48 | 345662233 | C-HSG-A0 | G-CAP-0-P | TPA-A0 | RS | LS | MAL | CPA | MSEAL | RSEAL | 72 71 70 - 68 67 66 65 64 - 62 61 60 59 - 57 - 55 - 53<br>- - 50 - 48 47 46 45 - - - - 40 39 38 37 - - - -<br>- 31 30 29 - 27 - 25 24 23 22 21 20 - - 17<br>- 15 14 13 - 11 - 9 8 7 6 5 4 - 2 1 | SALEABLE | | 345650003 |
| MX123 CONN ASSY 73 CKT BLK OPT0 KEY A/24 | 345662253 | C-HSG-A0 | G-CAP-0-P | TPA-A0 | RS | LS | MAL | CPA | MSEAL | RSEAL | - - - - - 67 - - - - 62 - 60 - - 57 - 55 - -<br>- 51 - - 48 - 46 45 44 43 - - 40 39 - - - 35 - -<br>- - - - - - - 25 - - - - - - - - -<br>- 15 14 - - - - - - 7 6 5 4 3 2 - | SALEABLE | | 345650003 |
| MX123 CONN ASSY 73 CKT BLK OPT0 KEY A/44 | 345662263 | C-HSG-A0 | G-CAP-0-P | TPA-A0 | RS | LS | MAL | CPA | MSEAL | RSEAL | 72 71 70 - 68 67 66 65 64 - 62 61 60 59 - 57 - - - -<br>- - - - 48 47 46 45 - - - - 40 39 38 37 - - - -<br>- 31 30 29 - 27 - 25 24 23 22 21 20 - - 17<br>- 15 - 13 - 11 - 9 8 7 6 5 4 - 2 1 | SALEABLE | | 345650003 |
| MX123 CONN ASSY 73 CKT BLK OPT0 KEY A/36 | 345662273 | C-HSG-A0 | G-CAP-0-P | TPA-A0 | RS | LS | MAL | CPA | MSEAL | RSEAL | 72 71 70 - 68 67 66 65 64 - - - 60 59 - - - - - -<br>- - - - 48 47 46 45 - - - - 40 39 38 - - - - -<br>- 31 30 - - - - 25 24 23 22 21 20 - - 17<br>- 15 - - - - - 9 8 7 6 5 4 - 2 1 | SALEABLE | | 345650003 |
| MX123 CONN ASSY 73 CKT GRY OPT0 KEY B/52 | 345662283 | C-HSG-B0 | G-CAP-0-P | TPA-B0 | RS | LS | MAL | CPA | MSEAL | RSEAL | 72 71 70 69 - - - - - - 62 61 60 59 58 57 56 - 54 53<br>52 51 50 - - 47 - - - - 42 41 40 39 38 37 36 35 34 33<br>- - 31 - - - - 26 25 24 23 22 21 20 19 18 -<br>- 15 14 13 12 11 - 9 8 7 6 5 4 3 2 1 | SALEABLE | | 345650003 |
| MX123 CONN ASSY 73 CKT BLU OPT0 KEY C/44 | 345662293 | C-HSG-C0 | G-CAP-0-P | TPA-C0 | RS | LS | MAL | CPA | MSEAL | RSEAL | - 71 - 69 - 67 - 65 64 - 62 61 60 - 58 - 56 55 54 -<br>- - 50 49 - - - 45 - 43 - 41 - - 38 37 36 35 - -<br>32 31 - 29 28 27 - - 24 23 - - 20 19 18 17<br>16 - - 13 12 11 - - 8 7 - 5 4 3 2 1 | SALEABLE | | 345650003 |
| MX123 CONN ASSY 73 CKT BLU OPT0 KEY C/47 | 345662313 | C-HSG-C0 | G-CAP-0-P | TPA-C0 | RS | LS | MAL | CPA | MSEAL | RSEAL | - 71 - 69 68 67 - 65 64 - 62 61 60 - 58 - 56 55 54 -<br>- - 50 49 48 47 - 45 - 43 - 41 - - 38 37 36 35 - -<br>32 31 - 29 28 27 - - 24 23 - - 20 19 18 17<br>16 - - 13 12 11 - - 8 7 - 5 4 3 2 1 | SALEABLE | | 345650003 |
| MX123 CONN ASSY 73 CKT BLU OPT0 KEY C/41 | 345662323 | C-HSG-C0 | G-CAP-0-P | TPA-C0 | RS | LS | MAL | CPA | MSEAL | RSEAL | - 71 - 69 - 67 - 65 64 - 62 61 60 - 58 - 56 55 54 -<br>- - 50 49 - - - 45 - 43 - 41 - - 38 37 36 35 - -<br>32 31 - 29 28 27 - - 24 23 - - - 19 18 17<br>16 - - 13 12 11 - - 8 7 - - - 3 2 1 | SALEABLE | | 345650003 |
| MX123 CONN ASSY 73 CKT BLK OPT0 KEY A/33 | 345662333 | C-HSG-A0 | G-CAP-0-P | TPA-A0 | RS | LS | MAL | CPA | MSEAL | RSEAL | 72 - 70 - - 67 66 - - - 62 - 60 - 58 - - 55 54 53<br>- 51 - - 48 - 46 45 44 43 42 - 40 - - - - 35 - -<br>- - - - - - - 26 25 - - - 21 - - - 17<br>- 15 14 - - - - - 8 7 6 5 4 3 2 - | SALEABLE | | 345650003 |
| MX123 CONN ASSY 73 CKT BLK OPT0 KEY A/36 | 345662343 | C-HSG-A0 | G-CAP-0-P | TPA-A0 | RS | LS | MAL | CPA | MSEAL | RSEAL | - 71 - 69 - - - - 64 63 62 61 60 59 - - 56 - 54 53<br>52 51 50 - 48 - 46 45 - - - - 40 - 38 - 36 - 34 33<br>- 31 - 29 28 - 26 - - 23 22 - - - - -<br>- 16 - - 12 11 10 - - 7 - - 4 - 2 - | SALEABLE | | 345650003 |

| ASSEMBLY DESCRIPTION | ASSEMBLY PART NUMBER | CONNECTOR HOUSING | GROMMET CAP | TPA | RIGHT SLIDE | LEFT SLIDE | MATE ASSIST LEVER | CPA | MAT SEAL | RING SEAL | BLOCKED TERMINALS<br>CAVITY WITH A NUMBER INDICATES BLOCKED TERMINAL POSITION<br>CAVITY WITHOUT A NUMBER INDICATES OPEN TERMINAL POSITION | STATUS | COMMENTS | INTEGRAL COMPONENTS SOLD SEPARATELY<br>DRESS COVER |
|---|---|---|---|---|---|---|---|---|---|---|---|---|---|---|
| MX123 CONN ASSY 73 CKT BLK OPT0 KEY A/37 | 345662353 | C-HSG-A0 | G-CAP-0-P | TPA-A0 | RS | LS | MAL | CPA | MSEAL | RSEAL | - 71 - 69 68 - - - 64 63 62 61 60 59 - - 56 - 54 53<br>52 51 50 - 48 - 46 45 - - - - 40 - 38 - 36 - 34 33<br>- - 31 - 29 28 - 26 - - 23 22 - - - - -<br>16 - - - 12 11 10 - - 7 - - 4 - 2 - | SALEABLE | | 345650003 |
| MX123 CONN ASSY 73 CKT BLU OPT0 KEY C/39 | 345662363 | C-HSG-C0 | G-CAP-0-P | TPA-C0 | RS | LS | MAL | CPA | MSEAL | RSEAL | - 71 - 69 68 - - 65 64 - - 61 60 - 58 - 56 55 54 -<br>- - 50 49 48 47 - 45 - 43 - 41 - - - 37 36 35 - -<br>- 31 - 29 28 - - - 24 23 - - - 19 18 17<br>16 - - 13 12 11 - - 8 7 - - - 3 2 1 | SALEABLE | | 345650003 |
| MX123 CONN ASSY 73 CKT GRY OPT0 KEY B/21 | 345662373 | C-HSG-B0 | G-CAP-0-P | TPA-B0 | RS | LS | MAL | CPA | MSEAL | RSEAL | 72 71 70 69 - - - - - 63 62 - - - - - 56 - - -<br>52 - - - - - - - 44 - - - - - - - 36 - - -<br>- - - 29 28 27 - 25 - - - - - 19 18 17<br>- - - - 12 11 - - - - - - - - - 1 | SALEABLE | | 345650003 |
| MX123 CONN ASSY 73 CKT GRY OPT0 KEY B/50 | 345662383 | C-HSG-B0 | G-CAP-0-P | TPA-B0 | RS | LS | MAL | CPA | MSEAL | RSEAL | 72 71 70 69 68 67 66 - 64 63 62 61 60 - 58 - 56 - 54 -<br>52 51 - - - 47 - 45 44 43 42 41 40 - 38 - 36 - 34 -<br>32 31 30 - 28 27 26 25 - - 22 - 20 19 18 17<br>16 - 14 13 12 11 10 9 8 - - - - - 2 1 | SALEABLE | | 345650003 |
| MX123 CONN ASSY 73 CKT GRY OPT0 KEY B/50 | 345662393 | C-HSG-B0 | G-CAP-0-P | TPA-B0 | RS | LS | MAL | CPA | MSEAL | RSEAL | 72 71 70 69 68 67 66 65 64 63 62 61 60 - 58 - 56 - 54 -<br>52 51 - - - 47 - 45 44 43 42 41 40 - 38 - 36 - 34 -<br>32 31 30 - 28 27 26 25 24 - 22 - 20 19 18 -<br>16 - 14 13 - 11 10 9 8 - - - - - 2 1 | SALEABLE | | 345650003 |
| MX123 CONN ASSY 73 CKT BLK OPT0 KEY A/38 | 345662413 | C-HSG-A0 | G-CAP-0-P | TPA-A0 | RS | LS | MAL | CPA | MSEAL | RSEAL | 72 71 - 69 68 - - - 64 63 62 61 60 59 - - 56 - 54 53<br>52 51 50 - 48 - 46 45 - - - - 40 - 38 - 36 - 34 33<br>- 31 - 29 28 - 26 - - 23 22 - - - - -<br>16 - - - 12 11 10 - - 7 - - 4 - 2 - | SALEABLE | | 345650003 |
| MX123 CONN ASSY 73 CKT BLK OPT0 KEY A/44 | 345662423 | C-HSG-A0 | G-CAP-0-P | TPA-A0 | RS | LS | MAL | CPA | MSEAL | RSEAL | 72 71 70 69 68 67 66 65 64 - 62 61 60 59 - - - - - -<br>- - 50 - 48 47 46 45 - - - - 40 39 38 37 - - - -<br>- 31 30 29 - 27 - 25 24 23 22 21 20 - - 17<br>- 15 14 13 - 11 - 9 8 - - 5 4 - 2 1 | SALEABLE | | 345650003 |
| MX123 CONN ASSY 73 CKT BLK OPT0 KEY A/44 | 345662433 | C-HSG-A0 | G-CAP-0-P | TPA-A0 | RS | LS | MAL | CPA | MSEAL | RSEAL | 72 71 70 - 68 67 66 65 64 - 62 61 60 59 58 57 - - - -<br>- - 50 - 48 47 46 45 - - - - 40 39 38 37 - - - -<br>- 31 30 29 - 27 - 25 24 - 22 21 20 - - 17<br>- 15 14 13 - 11 - 9 8 - - 5 4 - 2 1 | SALEABLE | | 345650003 |
| MX123 CONN ASSY 73 CKT BLU OPT0 KEY C/40 | 345662443 | C-HSG-C0 | G-CAP-0-P | TPA-C0 | RS | LS | MAL | CPA | MSEAL | RSEAL | - 71 - 69 - 67 - 65 64 - 62 61 60 - 58 - 56 55 54 -<br>- - 50 49 - - - 45 - 43 42 41 - - 38 37 36 35 - -<br>- 31 - 29 28 27 - - 24 23 - - - 19 18 17<br>16 - - - 12 11 - - 8 7 - - - 3 2 1 | SALEABLE | | 345650003 |
| MX123 CONN ASSY 73 CKT BLK OPT0 KEY A/36 | 345662453 | C-HSG-A0 | G-CAP-0-P | TPA-A0 | RS | LS | MAL | CPA | MSEAL | RSEAL | 72 - 70 - 68 67 66 - - - 62 61 60 59 - - - - - -<br>- - 50 - 48 47 46 - - - - - 40 39 38 - - - - -<br>- 31 - 29 - 27 - 25 24 - 22 21 20 - - 17<br>- 15 14 13 - 11 - 9 8 - - 5 4 - 2 1 | SALEABLE | | 345650003 |
| MX123 CONN ASSY 73 CKT BLK OPT0 KEY A/36 | 345662463 | C-HSG-A0 | G-CAP-0-P | TPA-A0 | RS | LS | MAL | CPA | MSEAL | RSEAL | 72 - 70 - 68 67 66 - - - 62 61 60 59 58 - - - - -<br>- - 50 - 48 47 46 - - - - - 40 39 38 - - - - -<br>- 31 - - - 27 - 25 24 - 22 21 20 - - 17<br>- 15 14 13 - 11 - 9 8 - - 5 4 - 2 1 | SALEABLE | | 345650003 |
| MX123 CONN ASSY 73 CKT BLK OPT0 KEY A/37 | 345662473 | C-HSG-A0 | G-CAP-0-P | TPA-A0 | RS | LS | MAL | CPA | MSEAL | RSEAL | 72 71 - 69 - - - - 64 63 62 61 60 59 - - 56 - 54 53<br>52 51 50 - 48 - 46 45 - - - - 40 - 38 - 36 - 34 33<br>- 31 - 29 28 - 26 - - 23 22 - - - - -<br>16 - - - 12 11 10 - - 7 - - 4 - 2 - | SALEABLE | | 345650003 |

| ASSEMBLY DESCRIPTION | ASSEMBLY PART NUMBER | CONNECTOR HOUSING | GROMMET CAP | TPA | RIGHT SLIDE | LEFT SLIDE | MATE ASSIST LEVER | CPA | MAT SEAL | RING SEAL | BLOCKED TERMINALS<br>CAVITY WITH A NUMBER INDICATES BLOCKED TERMINAL POSITION<br>CAVITY WITHOUT A NUMBER INDICATES OPEN TERMINAL POSITION | STATUS | COMMENTS | INTEGRAL COMPONENTS SOLD SEPARATELY<br>DRESS COVER |
|---|---|---|---|---|---|---|---|---|---|---|---|---|---|---|
| MX123 CONN ASSY 73 CKT BLK OPT0 KEY A/36 | 345662483 | C-HSG-A0 | G-CAP-0-P | TPA-A0 | RS | LS | MAL | CPA | MSEAL | RSEAL | 72 71 70 - 68 67 66 65 64 - - - 60 59 - - - - - -<br>- - 50 - 48 47 46 45 - - - - 40 39 38 - - - - -<br>- - 31 30 - - - - 25 24 - 22 21 20 - - 17<br>- - 15 14 - - - - 9 - 7 6 5 4 - 2 1 | SALEABLE | | 345650003 |
| MX123 CONN ASSY 73 CKT GRY OPT0 KEY B/23 | 345662493 | C-HSG-B0 | G-CAP-0-P | TPA-B0 | RS | LS | MAL | CPA | MSEAL | RSEAL | - - - 69 - - - 65 64 63 - - - - - - - - -<br>- - - 49 - - - 45 44 43 - - - - - - - - -<br>- - - - - - - - - - 23 22 21 20 19 18 -<br>- - - - 12 11 - 9 - 7 6 5 4 3 - - | SALEABLE | | 345650003 |
| MX123 CONN ASSY 73 CKT BLK OPT0 KEY A/33 | 345662503 | C-HSG-A0 | G-CAP-0-P | TPA-A0 | RS | LS | MAL | CPA | MSEAL | RSEAL | - - 70 - - - - 65 - - - 61 60 - 58 57 - 55 54 -<br>52 51 - 49 - 47 - 45 - - - 41 40 - 38 37 - - 34 -<br>- 31 - - 28 - 26 25 24 - 22 21 - 19 18 -<br>16 15 - - - - 10 - - 7 6 - - - - - | SALEABLE | | 345650003 |
| MX123 CONN ASSY 73 CKT BLU OPT0 KEY C/37 | 345662513 | C-HSG-C0 | G-CAP-0-P | TPA-C0 | RS | LS | MAL | CPA | MSEAL | RSEAL | - 71 - 69 - - - 65 64 - - 61 60 - 58 - 56 55 54 -<br>- - 50 49 - - - 45 - 43 - 41 - - 38 37 36 35 - -<br>- 31 - 29 28 - - - 24 23 - - - 19 18 17<br>16 - - 13 12 11 - - 8 7 - - - 3 2 1 | SALEABLE | | 345650003 |
| MX123 CONN ASSY 73 CKT BLK OPT0 KEY A/21 | 345662523 | C-HSG-A0 | G-CAP-0-P | TPA-A0 | RS | LS | MAL | CPA | MSEAL | RSEAL | - - - - - - - - - - 61 - - 58 57 56 - - -<br>- 51 50 - - 47 46 - - - - - - 38 37 36 - - -<br>- 31 30 - - - 26 - - - 22 21 20 - - -<br>- 15 14 - - - 10 - - - - - - - - - | SALEABLE | | 345650003 |
| MX123 CONN ASSY 73 CKT GRY OPT0 KEY B/34 | 345662533 | C-HSG-B0 | G-CAP-0-P | TPA-B0 | RS | LS | MAL | CPA | MSEAL | RSEAL | 72 71 70 69 68 - - - 64 - 62 61 60 - - - - - 54 -<br>52 51 - - - 47 - - 44 - 42 41 40 - - - - - - -<br>32 31 30 - 28 - 26 25 24 - - - 20 19 - 17<br>- - - - 12 11 10 9 - - - - - - 2 1 | SALEABLE | | 345650003 |
| MX123 CONN ASSY 73 CKT BLU OPT0 KEY C/45 | 345662543 | C-HSG-C0 | G-CAP-0-P | TPA-C0 | RS | LS | MAL | CPA | MSEAL | RSEAL | - 71 - 69 68 67 - 65 64 - 62 61 60 - 58 - 56 55 54 -<br>- - 50 49 48 47 - 45 - 43 - 41 - - 38 37 36 35 - -<br>- 31 - 29 28 - - - 24 23 - - 20 19 18 17<br>16 - - 13 12 11 - - 8 7 - 5 4 3 2 1 | SALEABLE | | 345650003 |
| MX123 CONN ASSY 73 CKT GRY OPT9 KEY B/24 | 345662553 | C-HSG-B9 | G-CAP-9-P | TPA-B9 | RS | LS | MAL | CPA | MSEAL | RSEAL | - - - 69 - - - 65 64 63 - - - - - - - - -<br>- - - 49 - - - 45 44 43 - - - - - - - - -<br>- - - - - - - - - - - 22 21 20 19 18 17<br>- - - - 12 11 - - - 7 6 5 4 3 2 1 | SALEABLE | | 345650003 |
| MX123 CONN ASSY 73 CKT BLK OPT9 KEY A/36 | 345662563 | C-HSG-A9 | G-CAP-9-P | TPA-A9 | RS | LS | MAL | CPA | MSEAL | RSEAL | 72 71 70 - 68 67 66 65 64 - - - 60 59 - - - - - -<br>- - - - 48 47 46 45 - - - - 40 39 38 - - - - -<br>- 31 30 - - - - 25 24 23 22 21 20 - - 17<br>- 15 - - - - - 9 8 7 6 5 4 - 2 1 | SALEABLE | | 345650003 |
| MX123 CONN ASSY 73 CKT BLU OPT9 KEY C/42 | 345662573 | C-HSG-C9 | G-CAP-9-P | TPA-C9 | RS | LS | MAL | CPA | MSEAL | RSEAL | - 71 - 69 68 - - 65 64 - - 61 60 - 58 - 56 55 54 -<br>- - 50 49 48 47 - 45 - 43 - 41 - - 38 37 36 35 - -<br>32 31 - 29 28 27 - - 24 23 - - - 19 18 17<br>16 - - 13 12 11 - - 8 7 - - - 3 2 1 | SALEABLE | | 345650003 |
| MX123 CONN ASSY 73 CKT BLK OPT0 KEY A/43 | 345662583 | C-HSG-A0 | G-CAP-0-P | TPA-A0 | RS | LS | MAL | CPA | MSEAL | RSEAL | 72 71 70 - 68 67 66 65 64 - 62 61 60 59 - 57 - - - -<br>- - - - 48 47 46 45 - - - - 40 - 38 37 - - - -<br>- 31 30 29 - 27 - 25 24 23 22 21 20 - - 17<br>- 15 - 13 - 11 - 9 8 7 6 5 4 - 2 1 | SALEABLE | | 345650003 |
| MX123 CONN ASSY 73 CKT BLU OPT0 KEY C/44 | 345662593 | C-HSG-C0 | G-CAP-0-P | TPA-C0 | RS | LS | MAL | CPA | MSEAL | RSEAL | - 71 - 69 68 67 - 65 64 - - 61 60 - 58 - 56 55 54 -<br>- - 50 49 48 47 - 45 - 43 - 41 - - 38 37 36 35 - -<br>- 31 - 29 28 - - - 24 23 - - 20 19 18 17<br>16 - - 13 12 11 - - 8 7 - 5 4 3 2 1 | SALEABLE | | 345650003 |

| ASSEMBLY DESCRIPTION | ASSEMBLY PART NUMBER | CONNECTOR HOUSING | GROMMET CAP | TPA | RIGHT SLIDE | LEFT SLIDE | MATE ASSIST LEVER | CPA | MAT SEAL | RING SEAL | BLOCKED TERMINALS<br>CAVITY WITH A NUMBER INDICATES BLOCKED TERMINAL POSITION<br>CAVITY WITHOUT A NUMBER INDICATES OPEN TERMINAL POSITION | STATUS | COMMENTS | INTEGRAL COMPONENTS SOLD SEPARATELY<br>DRESS COVER |
|---|---|---|---|---|---|---|---|---|---|---|---|---|---|---|
| MX123 CONN ASSY 73 CKT GRY OPT0 KEY B/53 | 345662603 | C-HSG-B0 | G-CAP-0-P | TPA-B0 | RS | LS | MAL | CPA | MSEAL | RSEAL | 72 71 70 69 68 - - - 64 63 62 61 60 - 58 - 56 - 54 -<br>52 51 50 - - - 46 45 - 43 42 41 40 - 38 - 36 - 34 -<br>- 32 31 30 - - 27 26 25 24 - 22 - 20 19 18 17<br>- 16 15 14 13 12 11 10 9 8 - 6 5 4 3 2 1 | SALEABLE | | 345650003 |
| MX123 CONN ASSY 73 CKT BLU OPT9 KEY C/41 | 345662613 | C-HSG-C9 | G-CAP-9-P | TPA-C9 | RS | LS | MAL | CPA | MSEAL | RSEAL | - 71 - 69 68 - - 65 64 - - 61 60 - 58 - 56 55 54 -<br>- - 50 49 48 47 - 45 - 43 - 41 - - 38 37 36 35 - -<br>- 32 31 - 29 28 - - - 24 23 - - - 19 18 17<br>- 16 - - 13 12 11 - - 8 7 - - - 3 2 1 | SALEABLE | | 345650003 |
| MX123 CONN ASSY 73 CKT BLK OPT0 KEY A/34 | 345662623 | C-HSG-A0 | G-CAP-0-P | TPA-A0 | RS | LS | MAL | CPA | MSEAL | RSEAL | 72 - 70 - - - 66 - - - 62 - 60 - 58 - - 55 54 53<br>52 51 - - 48 - 46 45 44 43 42 - 40 39 - - - 35 - -<br>- - - - - - 26 25 - - 22 21 - - - 17<br>- - 15 14 - - - - - 8 - 6 5 - 3 2 1 | SALEABLE | | 345650003 |
| MX123 CONN ASSY 73 CKT BLK OPT0 KEY A/38 | 345662633 | C-HSG-A0 | G-CAP-0-P | TPA-A0 | RS | LS | MAL | CPA | MSEAL | RSEAL | 72 - 70 - - - 66 - - 63 62 - 60 - 58 - - 55 54 53<br>52 51 - - 48 - 46 45 44 43 42 - 40 39 - - - 35 34 -<br>- - - - - - 26 25 - - 22 21 - - - 17<br>- 15 14 13 12 - - - 8 - 6 5 - 3 2 1 | SALEABLE | | 345650003 |
| MX123 CONN ASSY 73 CKT BLK OPT0 KEY A/32 | 345662643 | C-HSG-A0 | G-CAP-0-P | TPA-A0 | RS | LS | MAL | CPA | MSEAL | RSEAL | 72 - 70 - - - 66 - - - 62 - 60 - 58 - - 55 54 53<br>52 51 - - 48 - 46 45 44 43 42 - 40 - - - - 35 - -<br>- - - - - - 26 25 - - - 21 - - - 17<br>- 15 14 - - - - - 8 - 6 5 - 3 2 1 | SALEABLE | | 345650003 |
| MX123 CONN ASSY 73 CKT BLK OPT0 KEY A/36 | 345662653 | C-HSG-A0 | G-CAP-0-P | TPA-A0 | RS | LS | MAL | CPA | MSEAL | RSEAL | 72 - 70 - - - 66 - - 63 62 - 60 - 58 - - 55 54 53<br>52 51 - - 48 - 46 45 44 43 42 - 40 - - - - 35 34 -<br>- - - - - - 26 25 - - - 21 - - - 17<br>- 15 14 13 12 - - - 8 - 6 5 - 3 2 1 | SALEABLE | | 345650003 |
| MX123 CONN ASSY 73 CKT GRY OPT0 KEY B/27 | 345662693 | C-HSG-B0 | G-CAP-0-P | TPA-B0 | RS | LS | MAL | CPA | MSEAL | RSEAL | 72 - - 69 - 67 - - 64 63 62 61 - - - - 56 55 - -<br>52 - - - - 47 - - 44 - - - - - - - - - 34 -<br>- - - 29 28 27 26 25 - - - 21 - 19 18 17<br>- - 14 - - - - - - - - - - 3 2 1 | SALEABLE | | 345650003 |
| MX123 CONN ASSY 73 CKT GRY OPT0 KEY B/55 | 345662703 | C-HSG-B0 | G-CAP-0-P | TPA-B0 | RS | LS | MAL | CPA | MSEAL | RSEAL | 72 71 70 69 68 67 66 - 64 63 62 61 60 - 58 - 56 - 54 -<br>52 51 50 - - - 46 45 - 43 42 41 40 - 38 - 36 - 34 -<br>- 32 31 30 - - 27 26 25 24 - 22 - 20 19 18 17<br>- 16 15 14 13 12 11 10 9 8 - 6 5 4 3 2 1 | SALEABLE | | 345650003 |
| MX123 CONN ASSY 73 CKT BLK OPT0 KEY A/33 | 345662713 | C-HSG-A0 | G-CAP-0-P | TPA-A0 | RS | LS | MAL | CPA | MSEAL | RSEAL | 72 71 70 - - 67 66 - - - 62 - - - - 57 - 55 54 53<br>- 51 - - 48 - 46 45 44 43 42 - 40 39 - - - 35 - -<br>- - - - - - 26 - - - 22 21 - - - -<br>- 15 14 - - - - - 8 7 6 5 4 3 2 - | SALEABLE | | 345650003 |
| MX123 CONN ASSY 73 CKT GRY OPT0 KEY B/20 | 345662723 | C-HSG-B0 | G-CAP-0-P | TPA-B0 | RS | LS | MAL | CPA | MSEAL | RSEAL | 72 - - 69 - 67 - - - - 62 61 - - - - - - - -<br>52 - - - - 47 - - 44 - - - - - - - - - 34 -<br>- - - 29 28 27 26 25 - - - 21 - - 18 17<br>- - 14 - - - - - - - - - - - - - 1 | SALEABLE | | 345650003 |
| MX123 CONN ASSY 73 CKT BLK OPT0 KEY A/35 | 345662733 | C-HSG-A0 | G-CAP-0-P | TPA-A0 | RS | LS | MAL | CPA | MSEAL | RSEAL | 72 71 - 69 - - - - 64 63 62 61 60 59 - - 56 - 54 53<br>52 51 50 - 48 - 46 45 - - - - 40 - 38 - 36 35 34 33<br>- 31 - 29 28 - 26 - - - 22 - - - - -<br>- - 14 - 12 11 - - - 7 - - 4 - - - | SALEABLE | | 345650003 |
| MX123 CONN ASSY 73 CKT BLU OPT0 KEY C/41 | 345662743 | C-HSG-C0 | G-CAP-0-P | TPA-C0 | RS | LS | MAL | CPA | MSEAL | RSEAL | - 71 - 69 68 - - 65 64 - - 61 60 - 58 - 56 55 54 -<br>- - 50 49 48 47 - 45 - 43 - 41 - - 38 37 36 35 - -<br>- 31 - 29 28 27 - - 24 23 - - - 19 18 17<br>- 16 - - 13 12 11 - - 8 7 - - - 3 2 1 | SALEABLE | | 345650003 |

| ASSEMBLY DESCRIPTION | ASSEMBLY PART NUMBER | CONNECTOR HOUSING | GROMMET CAP | TPA | RIGHT SLIDE | LEFT SLIDE | MATE ASSIST LEVER | CPA | MAT SEAL | RING SEAL | BLOCKED TERMINALS<br>CAVITY WITH A NUMBER INDICATES BLOCKED TERMINAL POSITION<br>CAVITY WITHOUT A NUMBER INDICATES OPEN TERMINAL POSITION | STATUS | COMMENTS | INTEGRAL COMPONENTS SOLD SEPARATELY<br>DRESS COVER |
|---|---|---|---|---|---|---|---|---|---|---|---|---|---|---|
| MX123 CONN ASSY 73 CKT BLK OPT0 KEY A/38 | 345662753 | C-HSG-A0 | G-CAP-0-P | TPA-A0 | RS | LS | MAL | CPA | MSEAL | RSEAL | 72 71 70 69 68 67 66 65 64 - - - 60 59 - - - - - -<br>- - 50 - 48 47 46 45 - - - - 40 39 38 - - - - -<br>-<br>- 31 30 - - - - 25 24 23 22 21 20 - - 17<br>- - 14 - - - - 9 8 7 6 5 4 - 2 1 | SALEABLE | | 345650003 |
| MX123 CONN ASSY 73 CKT GRY OPT0 KEY B/25 | 345662763 | C-HSG-B0 | G-CAP-0-P | TPA-B0 | RS | LS | MAL | CPA | MSEAL | RSEAL | - - - 69 - - - 65 64 63 - - - - - - - - -<br>- - - 49 - - - 45 44 43 - - - - - - - - -<br>-<br>- - - - - - - - - 23 22 21 20 19 18 17<br>- - - - 12 11 - - - 7 6 5 4 3 2 1 | SALEABLE | | 345650003 |
| MX123 CONN ASSY 73 CKT BLK OPT9 KEY A/43 | 345662793 | C-HSG-A9 | G-CAP-9-P | TPA-A9 | RS | LS | MAL | CPA | MSEAL | RSEAL | 72 71 70 69 68 - - 65 64 63 62 61 60 59 58 57 56 55 54 53<br>52 51 50 49 - - 46 45 44 43 42 - 40 39 38 37 36 35 34 33<br>-<br>- - - - 28 - 26 - 24 23 - - 20 - - -<br>- - - - 12 - - - - - - - - - 2 - | SALEABLE | | 345650003 |
| MX123 CONN ASSY 73 CKT GRY OPT9 KEY B/22 | 345662813 | C-HSG-B9 | G-CAP-9-P | TPA-B9 | RS | LS | MAL | CPA | MSEAL | RSEAL | - - - - - - - - - 63 - - - - - - - - - 53<br>- - - - - 47 - 45 - 43 42 41 - 39 38 - - 35 34 33<br>-<br>- - - - - - 26 - - 23 22 - - 19 - 17<br>- 15 - - - - - - 8 - - 5 - - - 1 | SALEABLE | | 345650003 |
| MX123 CONN ASSY 73 CKT BLK OPT0 KEY A/46 | 345662823 | C-HSG-A0 | G-CAP-0-P | TPA-A0 | RS | LS | MAL | CPA | MSEAL | RSEAL | 72 71 70 69 68 - - 65 64 63 62 61 60 59 58 57 56 55 54 53<br>52 51 50 49 48 - 46 45 44 43 42 - 40 39 38 37 36 35 34 33<br>-<br>- - - - 28 - 26 - 24 23 - - 20 - - -<br>- - - - 12 11 - - - - - - - - 2 1 | SALEABLE | | 345650003 |
| MX123 CONN ASSY 73 CKT GRY OPT0 KEY B/26 | 345662833 | C-HSG-B0 | G-CAP-0-P | TPA-B0 | RS | LS | MAL | CPA | MSEAL | RSEAL | - - - - - - - - 64 63 62 - - 59 58 - - - - 53<br>- - - - - 47 - 45 - 43 42 41 - 39 38 - - 35 34 33<br>-<br>- - - - - - 26 25 - 23 22 - - - - -<br>- 15 - - - - - - 8 - - 5 - 3 - 1 | SALEABLE | | 345650003 |
| MX123 CONN ASSY 73 CKT BLK OPT0 KEY A/44 | 345662843 | C-HSG-A0 | G-CAP-0-P | TPA-A0 | RS | LS | MAL | CPA | MSEAL | RSEAL | 72 71 70 69 68 - - 65 64 63 62 61 60 59 58 57 56 55 54 53<br>52 51 50 49 48 - 46 45 44 43 42 - 40 39 38 37 36 35 34 33<br>-<br>- - - - 28 - 26 - 24 23 - - 20 - - -<br>- - - - 12 11 - - - - - - - - 2 - | SALEABLE | | 345650003 |
| MX123 CONN ASSY 73 CKT GRY OPT0 KEY B/24 | 345662853 | C-HSG-B0 | G-CAP-0-P | TPA-B0 | RS | LS | MAL | CPA | MSEAL | RSEAL | - - - - - - - - - - 62 - - 59 58 - - - - 53<br>- - - - - 47 - 45 - 43 42 41 - 39 38 - - 35 34 33<br>-<br>- - - - - - 26 25 - 23 22 - - - - 17<br>- 15 - - - - - - 8 - - 5 - - - 1 | SALEABLE | | 345650003 |
| MX123 CONN ASSY 73 CKT BLK OPT0 KEY A/23 | 345662863 | C-HSG-A0 | G-CAP-0-P | TPA-A0 | RS | LS | MAL | CPA | MSEAL | RSEAL | - - - - - - - 65 - - - 61 - - 58 57 56 - - -<br>- 51 50 - - 47 - 45 - - - 41 - - 38 37 36 - - -<br>-<br>- 31 30 - - - 26 25 - - 22 21 20 - - -<br>- 15 - - - - 10 - - - - - - - - - | SALEABLE | | 345650003 |
| MX123 CONN ASSY 73 CKT GRY OPT0 KEY B/37 | 345662873 | C-HSG-B0 | G-CAP-0-P | TPA-B0 | RS | LS | MAL | CPA | MSEAL | RSEAL | - - - - - - - 65 64 63 62 61 60 - - - - - 54 -<br>- - - - - - 46 45 44 43 42 41 40 - - - - - 34 -<br>-<br>32 31 30 29 28 27 26 25 24 - - - 20 19 18 17<br>16 - 14 13 12 - - 9 - 7 - - - - 2 1 | SALEABLE | | 345650003 |
| MX123 CONN ASSY 73 CKT BLK OPT0 KEY A/39 | 345662883 | C-HSG-A0 | G-CAP-0-P | TPA-A0 | RS | LS | MAL | CPA | MSEAL | RSEAL | 72 71 - - 68 67 66 65 64 - - - 60 59 - - - - - -<br>- - 50 - 48 47 46 45 - - - - 40 39 38 - - 35 - 33<br>-<br>- 31 30 - - - - 25 24 23 22 21 20 - - 17<br>- 15 14 - - - - 9 8 7 6 5 4 - 2 1 | SALEABLE | | 345650003 |
| MX123 CONN ASSY 73 CKT BLK OPT0 KEY A/35 | 345662893 | C-HSG-A0 | G-CAP-0-P | TPA-A0 | RS | LS | MAL | CPA | MSEAL | RSEAL | - 71 70 - 68 - 66 - 64 - 62 61 - 59 58 - - 55 54 -<br>52 51 50 - 48 - - 45 - - 42 41 - 39 38 - - - 34 -<br>-<br>32 - - - - 27 26 25 - 23 22 - - 19 18 -<br>- - - - 12 - - 9 8 7 6 - - - - - | SALEABLE | | 345650003 |

| ASSEMBLY DESCRIPTION | ASSEMBLY PART NUMBER | CONNECTOR HOUSING | GROMMET CAP | TPA | RIGHT SLIDE | LEFT SLIDE | MATE ASSIST LEVER | CPA | MAT SEAL | RING SEAL | BLOCKED TERMINALS<br>CAVITY WITH A NUMBER INDICATES BLOCKED TERMINAL POSITION<br>CAVITY WITHOUT A NUMBER INDICATES OPEN TERMINAL POSITION | STATUS | COMMENTS | INTEGRAL COMPONENTS SOLD SEPARATELY<br>DRESS COVER |
|---|---|---|---|---|---|---|---|---|---|---|---|---|---|---|
| MX123 CONN ASSY 73 CKT BLK OPT0 KEY A/24 | 345662903 | C-HSG-A0 | G-CAP-0-P | TPA-A0 | RS | LS | MAL | CPA | MSEAL | RSEAL | - - - - - - - 65 - - - - 60 - 58 57 56 - - -<br>- - 50 - - 47 46 45 - - - - 40 - 38 37 36 - - -<br>- - - 30 - 28 - 26 - 24 - 22 21 20 - - -<br>- 15 14 - - - 10 - - - - - - - - - | SALEABLE | | 345650003 |
| MX123 CONN ASSY 73 CKT GRY OPT0 KEY B/55 | 345662913 | C-HSG-B0 | G-CAP-0-P | TPA-B0 | RS | LS | MAL | CPA | MSEAL | RSEAL | 72 71 70 69 - - 66 65 - 63 62 61 60 59 - 57 56 55 54 53<br>52 51 50 49 48 47 - - 44 43 42 41 40 39 - 37 36 35 34 33<br>- 31 - - - 26 25 24 23 - 21 20 19 18 -<br>16 - 14 - 12 11 - 9 8 7 6 5 4 3 2 - | SALEABLE | | 345650003 |
| MX123 CONN ASSY 73 CKT GRY OPT0 KEY B/59 | 345662923 | C-HSG-B0 | G-CAP-0-P | TPA-B0 | RS | LS | MAL | CPA | MSEAL | RSEAL | 72 71 70 69 - - 66 65 - 63 62 61 60 59 58 57 56 55 54 53<br>52 51 50 49 48 47 - - 44 43 42 41 40 39 38 37 36 35 34 33<br>- 31 - - - - 26 25 24 23 22 21 20 19 18 -<br>16 - 14 - 12 11 - 9 8 7 6 5 4 3 2 1 | SALEABLE | | 345650003 |
| MX123 CONN ASSY 73 CKT BLK OPT0 KEY A/37 | 345662933 | C-HSG-A0 | G-CAP-0-P | TPA-A0 | RS | LS | MAL | CPA | MSEAL | RSEAL | - 71 70 - 68 - 66 - 64 - 62 61 - 59 58 - - 55 54 -<br>52 51 50 - 48 - 46 45 - - 42 41 - 39 38 - - - 34 -<br>32 - - - - 27 26 25 - 23 22 - - 19 18 -<br>- - - 13 12 - - 9 8 7 6 - - - - - | SALEABLE | | 345650003 |
| MX123 CONN ASSY 73 CKT GRY OPT0 KEY B/23 | 345662943 | C-HSG-B0 | G-CAP-0-P | TPA-B0 | RS | LS | MAL | CPA | MSEAL | RSEAL | 72 71 70 69 - - 66 65 - - 62 61 60 - 58 - 56 55 54 53<br>52 51 50 49 48 47 - - 44 - 42 41 40 - 38 - 36 35 34 33<br>- 31 - - - - 26 25 24 23 22 - 20 19 18 17<br>16 15 14 13 12 11 - 9 8 7 - - - - 2 1 | SALEABLE | | 345650003 |
| MX123 CONN ASSY 73 CKT GRY OPT0 KEY B/21 | 345662953 | C-HSG-B0 | G-CAP-0-P | TPA-B0 | RS | LS | MAL | CPA | MSEAL | RSEAL | 72 71 70 69 - - 66 65 - - 62 61 60 - 58 57 56 55 54 53<br>52 51 50 49 48 47 - - 44 - 42 41 40 - 38 37 36 35 - 33<br>- 31 - - - - 26 25 24 23 22 21 20 19 18 17<br>16 15 14 13 12 11 - 9 8 7 - - - - 2 1 | SALEABLE | | 345650003 |
| MX123 CONN ASSY 73 CKT BLK OPT9 KEY A/38 | 345662983 | C-HSG-A9 | G-CAP-9-P | TPA-A9 | RS | LS | MAL | CPA | MSEAL | RSEAL | 72 71 - - 68 67 66 65 64 - - - 60 59 - - - - - -<br>- - 50 - 48 47 46 45 - - - - 40 39 38 - - 35 - 33<br>- 31 30 - - - - 25 24 23 22 21 20 - - -<br>- - 14 - - - - 9 8 7 6 5 4 - - - | SALEABLE | | 345650003 |
| MX123 CONN ASSY 73 CKT GRY OPT9 KEY B/49 | 345662993 | C-HSG-B9 | G-CAP-9-P | TPA-B9 | RS | LS | MAL | CPA | MSEAL | RSEAL | - - - 69 - - - 65 64 63 - - - - - - - - - -<br>- - - 49 - - - 45 44 43 - - - - - - - - - -<br>- - - - - - - - - 23 22 21 20 19 18 17<br>- - - - 12 11 - - - 7 6 5 4 3 2 1 | SALEABLE | | 345650003 |
| MX123 CONN ASSY 73 CKT BLK OPT0 KEY A/6 | 345663003 | C-HSG-A0 | G-CAP-0-P | TPA-A0 | RS | LS | MAL | CPA | MSEAL | RSEAL | - - - - - - - 65 - - - 61 - - - - - - - -<br>- - - - - - - 45 - - - - - - - - - - - -<br>- - - - - - 26 - - - - - - - - -<br>- - - - - - 10 - - - - - - - - - | SALEABLE | | 345650003 |
| MX123 CONN ASSY 73 CKT BLU OPT9 KEY C/41 | 345663013 | C-HSG-C9 | G-CAP-9-P | TPA-C9 | RS | LS | MAL | CPA | MSEAL | RSEAL | - - - - - - - 65 64 - - 61 60 - 58 - - - 54 -<br>- - 50 49 48 47 - 45 - 43 - 41 - - - 37 36 35 - -<br>- 31 - 29 28 27 - - 24 23 - - 20 - - 17<br>16 - - 13 12 11 - - 8 7 - - - - 2 1 | SALEABLE | | 345650003 |
| MX123 CONN ASSY 73 CKT BLU OPT0 KEY C/37 | 345663043 | C-HSG-C0 | G-CAP-0-P | TPA-C0 | RS | LS | MAL | CPA | MSEAL | RSEAL | - 71 - 69 - 67 - 65 64 - - 61 60 - 58 - 56 55 54 -<br>- - 50 49 - - - 45 - 43 - 41 - - 38 37 36 35 - -<br>- 31 - 29 28 - - - 24 23 - - - 19 18 17<br>16 - - - 12 11 - - 8 7 - - - 3 2 1 | SALEABLE | | 345650003 |
| MX123 CONN ASSY 73 CKT BLU OPT0 KEY C/38 | 345663053 | C-HSG-C0 | G-CAP-0-P | TPA-C0 | RS | LS | MAL | CPA | MSEAL | RSEAL | - 71 - 69 - 67 - 65 64 - - 61 60 - 58 - 56 55 54 -<br>- - 50 49 - - - 45 - 43 - 41 - - - 37 36 35 - -<br>- 31 - 29 28 - - - 24 23 - - - 19 18 17<br>16 - - - 12 11 - - 8 7 - - - 3 2 1 | SALEABLE | | 345650003 |

| ASSEMBLY DESCRIPTION | ASSEMBLY PART NUMBER | CONNECTOR HOUSING | GROMMET CAP | TPA | RIGHT SLIDE | LEFT SLIDE | MATE ASSIST LEVER | CPA | MAT SEAL | RING SEAL | BLOCKED TERMINALS<br>CAVITY WITH A NUMBER INDICATES BLOCKED TERMINAL POSITION<br>CAVITY WITHOUT A NUMBER INDICATES OPEN TERMINAL POSITION | STATUS | COMMENTS | INTEGRAL COMPONENTS SOLD SEPARATELY<br>DRESS COVER |
|---|---|---|---|---|---|---|---|---|---|---|---|---|---|---|
| MX123 CONN ASSY 73 CKT BLK OPT0 KEY A/36 | 345663063 | C-HSG-A0 | G-CAP-0-P | TPA-A0 | RS | LS | MAL | CPA | MSEAL | RSEAL | 72 - 70 - 68 67 66 - - - 62 61 - 59 - - - - - -<br>- - 50 - 48 47 46 - - - - - 40 39 38 - - - - -<br>- - 31 - 29 - 27 - 25 24 23 22 21 20 - - 17<br>- - 15 14 13 - 11 - 9 8 7 6 5 4 - 2 1 | SALEABLE | | 345650003 |
| MX123 CONN ASSY 73 CKT BLK OPT0 KEY A/39 | 345663073 | C-HSG-A0 | G-CAP-0-P | TPA-A0 | RS | LS | MAL | CPA | MSEAL | RSEAL | 72 - 70 - 68 67 66 - - - 62 61 - 59 58 - - - - -<br>- - 50 - 48 47 46 - - - - - 40 39 38 - - - - -<br>- - 31 - 29 - 27 - 25 24 - 22 21 20 - - 17<br>- - 15 14 13 - 11 - 9 - - - 5 4 - 2 1 | SALEABLE | | 345650003 |
| MX123 CONN ASSY 73 CKT BLK OPT0 KEY A/36 | 345663083 | C-HSG-A0 | G-CAP-0-P | TPA-A0 | RS | LS | MAL | CPA | MSEAL | RSEAL | 72 - 70 - 68 67 66 - - - 62 61 - 59 - - - - - -<br>- - 50 - 48 47 46 - - - - - 40 39 38 - - - - -<br>- - 31 - 29 - 27 - 25 24 23 22 21 20 - - 17<br>- - 15 14 13 12 - - 9 8 7 6 5 4 - 2 1 | SALEABLE | | 345650003 |
| MX123 CONN ASSY 73 CKT BLK OPT0 KEY A/36 | 345663093 | C-HSG-A0 | G-CAP-0-P | TPA-A0 | RS | LS | MAL | CPA | MSEAL | RSEAL | 72 - 70 - 68 67 66 65 - - - 61 - 59 58 - - - - -<br>- - 50 - 48 47 46 - - - - - 40 39 38 - - - - -<br>- - 31 - 29 - 27 - 25 24 - 22 21 20 - - 17<br>- - 15 14 13 - 11 - 9 8 7 6 5 4 - 2 1 | SALEABLE | | 345650003 |
| MX123 CONN ASSY 73 CKT GRY OPT0 KEY B/48 | 345663103 | C-HSG-B0 | G-CAP-0-P | TPA-B0 | RS | LS | MAL | CPA | MSEAL | RSEAL | 72 71 70 69 68 67 66 - 64 63 - 61 60 - 58 - 56 - 54 -<br>52 51 50 - - 47 - 45 44 43 - 41 40 - 38 - 36 - 34 -<br>- 32 31 30 - 28 27 - 25 24 - 22 - 20 19 - 17<br>- 16 - 14 13 12 11 10 - - - 6 5 - - 2 1 | SALEABLE | | 345650003 |
| MX123 CONN ASSY 73 CKT BLK OPT0 KEY A/39 | 345663113 | C-HSG-A0 | G-CAP-0-P | TPA-A0 | RS | LS | MAL | CPA | MSEAL | RSEAL | 72 - 70 - 68 67 66 - - - 62 61 - 59 58 - - - - -<br>- - 50 - 48 47 46 - - - - - 40 39 38 - - - - -<br>- - 31 - 29 - 27 - 25 24 - 22 - 20 - - 17<br>- - 15 14 13 - 11 - 9 - 7 6 - 4 - 2 1 | SALEABLE | | 345650003 |
| MX123 CONN ASSY 73 CKT GRY OPT0 KEY B/32 | 345663123 | C-HSG-B0 | G-CAP-0-P | TPA-B0 | RS | LS | MAL | CPA | MSEAL | RSEAL | - 71 - 69 - 67 - 65 64 63 62 61 - - 58 57 56 - - -<br>- 51 - 49 - 47 - 45 44 43 42 41 - - 38 37 36 - - -<br>- - - - - - - - - 23 22 21 20 19 18 17<br>- 15 14 13 12 11 - - - 7 6 5 4 3 2 1 | SALEABLE | | 345650003 |
| MX123 CONN ASSY 73 CKT BLU OPT0 KEY C/36 | 345663133 | C-HSG-C0 | G-CAP-0-P | TPA-C0 | RS | LS | MAL | CPA | MSEAL | RSEAL | - 71 - 69 - - - 65 64 - - 61 60 - 58 - 56 55 54 -<br>- - 50 49 - - - 45 - 43 - 41 - - 38 37 36 35 - -<br>- 31 - 29 28 27 - - 24 23 - - - 19 18 17<br>16 - - 13 12 11 - - 8 7 - - - 3 2 1 | SALEABLE | | 345650003 |
| MX123 CONN ASSY 73 CKT BLU OPT0 KEY C/31 | 345663143 | C-HSG-C0 | G-CAP-0-P | TPA-C0 | RS | LS | MAL | CPA | MSEAL | RSEAL | - 71 - 69 68 67 - 65 64 - - 61 60 - 58 - 56 55 54 -<br>- - 50 49 48 47 - 45 - 43 - 41 - - 38 - - 35 - -<br>- 31 - 29 28 27 - - 24 23 - - 20 19 18 17<br>16 - - 13 12 11 - - 8 7 - 5 4 3 2 1 | SALEABLE | | 345650003 |
| MX123 CONN ASSY 73 CKT BLK OPT0 KEY A/26 | 345663153 | C-HSG-A0 | G-CAP-0-P | TPA-A0 | RS | LS | MAL | CPA | MSEAL | RSEAL | 72 71 - - 68 67 66 65 64 - 62 61 60 59 - 57 - 55 - 53<br>- - 50 - 48 - 46 45 - - - - 40 39 38 37 - 35 - 33<br>- 31 30 29 - 27 - 25 24 23 22 21 20 - - 17<br>- 15 14 13 - 11 - 9 8 7 6 5 4 - 2 1 | SALEABLE | | 345650003 |
| MX123 CONN ASSY 73 CKT BLU OPT0 KEY C/35 | 345663163 | C-HSG-C0 | G-CAP-0-P | TPA-C0 | RS | LS | MAL | CPA | MSEAL | RSEAL | - 71 - 69 68 67 66 65 64 - - 61 60 - 58 - - - 54 -<br>- - 50 49 48 47 - 45 - 43 - 41 - - 38 - - 35 - -<br>- 31 - 29 28 27 - - 24 23 - - 20 - - 17<br>16 - - 13 12 11 - - 8 7 - 5 4 - 2 1 | SALEABLE | | 345650003 |
| MX123 CONN ASSY 73 CKT BLK OPT0 KEY A/29 | 345663173 | C-HSG-A0 | G-CAP-0-P | TPA-A0 | RS | LS | MAL | CPA | MSEAL | RSEAL | 72 71 - - 68 67 66 65 64 - 62 61 60 59 - 57 - 55 - 53<br>- - 50 - 48 - 46 45 - - - - 40 39 38 37 - 35 - 33<br>- 31 30 29 - 27 - 25 24 23 22 21 20 - - -<br>- 15 14 13 - 11 - 9 8 7 6 5 4 - - - | SALEABLE | | 345650003 |

| ASSEMBLY DESCRIPTION | ASSEMBLY PART NUMBER | CONNECTOR HOUSING | GROMMET CAP | TPA | RIGHT SLIDE | LEFT SLIDE | MATE ASSIST LEVER | CPA | MAT SEAL | RING SEAL | BLOCKED TERMINALS<br>CAVITY WITH A NUMBER INDICATES BLOCKED TERMINAL POSITION<br>CAVITY WITHOUT A NUMBER INDICATES OPEN TERMINAL POSITION | STATUS | COMMENTS | INTEGRAL COMPONENTS SOLD SEPARATELY<br>DRESS COVER |
|---|---|---|---|---|---|---|---|---|---|---|---|---|---|---|
| MX123 CONN ASSY 73 CKT BLU OPT0 KEY C/30 | 345663183 | C-HSG-C0 | G-CAP-0-P | TPA-C0 | RS | LS | MAL | CPA | MSEAL | RSEAL | - 71 - 69 68 67 - 65 64 - - 61 60 - 58 - - - 54 -<br>- - 50 49 48 47 - 45 - 43 - 41 - - 38 37 36 35 - -<br>- 32 31 - 29 28 27 - - 24 23 - - 20 19 18 17<br>- 16 - - 13 12 11 - - 8 7 - 5 4 3 2 1 | SALEABLE | | 345650003 |
| MX123 CONN ASSY 73 CKT BLK OPT0 KEY A/31 | 345663193 | C-HSG-A0 | G-CAP-0-P | TPA-A0 | RS | LS | MAL | CPA | MSEAL | RSEAL | 72 71 70 - 68 67 66 65 64 - 62 61 60 59 - 57 - - - -<br>- - 50 - 48 47 46 45 - - - - 40 39 38 37 - - - -<br>- - 31 30 29 - 27 - 25 24 23 22 21 20 - - -<br>- - 15 14 13 - 11 - 9 8 7 6 5 4 - - - | SALEABLE | | 345650003 |
| MX123 CONN ASSY 73 CKT GRY OPT0 KEY B/42 | 345663203 | C-HSG-B0 | G-CAP-0-P | TPA-B0 | RS | LS | MAL | CPA | MSEAL | RSEAL | 72 71 70 69 68 - 66 65 64 63 62 61 - - - - - - 54 -<br>52 51 - - - 47 - 45 44 43 42 41 40 - - - 36 - - -<br>- 32 31 30 - 28 27 26 25 24 - - - 20 19 - 17<br>- - - - 13 12 11 10 9 8 - - - - - 2 1 | SALEABLE | | 345650003 |
| MX123 CONN ASSY 73 CKT BLU OPT0 KEY C/31 | 345663213 | C-HSG-C0 | G-CAP-0-P | TPA-C0 | RS | LS | MAL | CPA | MSEAL | RSEAL | - 71 - 69 68 - - 65 64 - - 61 60 - 58 57 - 55 54 -<br>- - 50 49 48 47 - 45 - 43 - 41 - 39 38 37 36 35 - -<br>- - 31 - 29 28 27 - - 24 23 - - 20 19 18 17<br>- 16 - - 13 12 11 - - 8 7 - - - 3 2 1 | SALEABLE | | 345650003 |
| MX123 CONN ASSY 73 CKT BLU OPT0 KEY C/33 | 345663223 | C-HSG-C0 | G-CAP-0-P | TPA-C0 | RS | LS | MAL | CPA | MSEAL | RSEAL | - 71 - 69 68 - - 65 64 - - 61 60 - 58 - 56 55 54 -<br>- - 50 49 48 47 - 45 - 43 - 41 - - 38 37 36 35 - -<br>- - 31 - 29 28 - - - 24 23 - - 20 19 18 17<br>- 16 - - 13 12 11 - - 8 7 - - - 3 2 1 | SALEABLE | | 345650003 |
| MX123 CONN ASSY 73 CKT BLK OPT0 KEY A/36 | 345663233 | C-HSG-A0 | G-CAP-0-P | TPA-A0 | RS | LS | MAL | CPA | MSEAL | RSEAL | 72 71 - - 68 67 66 65 64 - - - 60 59 - - - - - -<br>- - 50 - 48 47 46 45 - - - - 40 39 38 - - 35 - 33<br>- - 31 30 - - - 25 24 23 22 21 20 - - 17<br>- - - 14 - - - 9 8 7 6 5 4 - 2 1 | SALEABLE | | 345650003 |
| MX123 CONN ASSY 73 CKT BLU OPT0 KEY C/31 | 345663243 | C-HSG-C0 | G-CAP-0-P | TPA-C0 | RS | LS | MAL | CPA | MSEAL | RSEAL | - 71 - 69 68 67 - 65 64 - - 61 60 - 58 - 56 55 54 -<br>- - 50 49 48 47 - 45 - 43 - 41 - - 38 37 36 35 - -<br>- - 31 - 29 28 27 - - 24 23 - - 20 19 18 17<br>- 16 - - 13 12 11 - - 8 7 - - - 3 2 1 | SALEABLE | | 345650003 |
| MX123 CONN ASSY 73 CKT BLK OPT0 KEY A/28 | 345663253 | C-HSG-A0 | G-CAP-0-P | TPA-A0 | RS | LS | MAL | CPA | MSEAL | RSEAL | 72 71 - - 68 67 66 65 64 - 62 61 60 59 - 57 - - - -<br>- - 50 - 48 47 46 45 - - - - 40 39 38 37 - 35 - 33<br>- - 31 30 29 - 27 - 25 24 23 22 21 20 - - 17<br>- - 14 13 - 11 - 9 8 7 6 5 4 - 2 1 | SALEABLE | | 345650003 |
| MX123 CONN ASSY 73 CKT BLU OPT0 KEY C/36 | 345663263 | C-HSG-C0 | G-CAP-0-P | TPA-C0 | RS | LS | MAL | CPA | MSEAL | RSEAL | - 71 - 69 68 67 - 65 64 - - 61 60 - 58 - - - 54 -<br>- - 50 49 48 47 - 45 - 43 - 41 - - 38 37 36 35 - -<br>- - 31 - 29 28 27 - - 24 23 - - 20 - - 17<br>- 16 - - 13 12 11 - - 8 7 - - - - 2 1 | SALEABLE | | 345650003 |
| MX123 CONN ASSY 73 CKT BLK OPT0 KEY A/31 | 345663273 | C-HSG-A0 | G-CAP-0-P | TPA-A0 | RS | LS | MAL | CPA | MSEAL | RSEAL | 72 71 - - 68 67 66 65 64 - 62 61 60 59 - 57 - - - -<br>- - 50 - 48 47 46 45 - - - - 40 39 38 37 - 35 - 33<br>- - 31 30 29 - 27 - 25 24 23 22 21 20 - - -<br>- - 14 13 - 11 - 9 8 7 6 5 4 - - - | SALEABLE | | 345650003 |
| MX123 CONN ASSY 73 CKT BLU OPT0 KEY C/31 | 345663283 | C-HSG-C0 | G-CAP-0-P | TPA-C0 | RS | LS | MAL | CPA | MSEAL | RSEAL | - 71 - 69 68 - - 65 64 - - 61 60 - 58 - 56 55 54 -<br>- - 50 49 48 47 - 45 - 43 - 41 - - 38 37 36 35 - -<br>- 32 31 - 29 28 27 - - 24 23 - - 20 19 18 17<br>- 16 - - 13 12 11 - - 8 7 - - - 3 2 1 | SALEABLE | | 345650003 |
| MX123 CONN ASSY 73 CKT GRY OPT0 KEY B/49 | 345663293 | C-HSG-B0 | G-CAP-0-P | TPA-B0 | RS | LS | MAL | CPA | MSEAL | RSEAL | - - - 69 - - - 65 64 63 - - - - - - - - - -<br>- - - 49 - - 46 45 44 43 - - - - - - - - - -<br>- - - - - - - - - - - - 22 21 20 19 18 17<br>- - - - 12 11 - - - 7 6 5 4 3 2 1 | SALEABLE | | 345650003 |

| ASSEMBLY DESCRIPTION | ASSEMBLY PART NUMBER | CONNECTOR HOUSING | GROMMET CAP | TPA | RIGHT SLIDE | LEFT SLIDE | MATE ASSIST LEVER | CPA | MAT SEAL | RING SEAL | BLOCKED TERMINALS<br>CAVITY WITH A NUMBER INDICATES BLOCKED TERMINAL POSITION<br>CAVITY WITHOUT A NUMBER INDICATES OPEN TERMINAL POSITION | STATUS | COMMENTS | INTEGRAL COMPONENTS SOLD SEPARATELY<br>DRESS COVER |
|---|---|---|---|---|---|---|---|---|---|---|---|---|---|---|
| MX123 CONN ASSY 73 CKT GRY OPT0 KEY B/44 | 345663303 | C-HSG-B0 | G-CAP-0-P | TPA-B0 | RS | LS | MAL | CPA | MSEAL | RSEAL | 72 71 70 69 68 67 66 65 64 63 62 61 60 - - - - - 54 -<br>52 51 - - - 47 - 45 44 43 42 41 40 - - - 36 - - -<br>- 32 31 30 - 28 27 26 25 24 - - - 20 19 - 17<br>- - - 13 12 11 10 9 8 - - - - - 2 1 | SALEABLE | | 345650003 |
| MX123 CONN ASSY 73 CKT BLU OPT0 KEY C/28 | 345663313 | C-HSG-C0 | G-CAP-0-P | TPA-C0 | RS | LS | MAL | CPA | MSEAL | RSEAL | - 71 - 69 68 67 66 65 64 - - 61 60 - 58 - 56 55 54 -<br>- - 50 49 48 47 - 45 - 43 - 41 - - 38 37 36 35 - -<br>- 31 - 29 28 27 - - 24 23 - - 20 19 18 17<br>16 - - 13 12 11 10 9 8 7 - - - 3 2 1 | SALEABLE | | 345650003 |
| MX123 CONN ASSY 73 CKT GRY OPT0 KEY B/25 | 345663323 | C-HSG-B0 | G-CAP-0-P | TPA-B0 | RS | LS | MAL | CPA | MSEAL | RSEAL | 72 71 70 69 - - - - - - 62 61 60 59 - 57 56 - 54 53<br>52 51 50 - - 47 - - - - 42 41 40 39 - 37 36 35 34 33<br>- 31 - - - - 26 25 24 23 - 21 20 19 18 -<br>- 15 14 13 12 11 - 9 8 7 6 5 4 3 2 1 | SALEABLE | | 345650003 |
| MX123 CONN ASSY 73 CKT BLK OPT0 KEY A/49 | 345663333 | C-HSG-A0 | G-CAP-0-P | TPA-A0 | RS | LS | MAL | CPA | MSEAL | RSEAL | - - - - - 67 66 - - - 62 - 60 - - - - 55 - 53<br>- - - - 48 - 46 45 44 43 - - 40 39 - - - 35 - -<br>- - - - - - - 25 - - 22 21 - - - -<br>- 15 14 - - - - - 8 7 6 5 4 - - - | SALEABLE | | 345650003 |
| MX123 CONN ASSY 73 CKT BLK OPT0 KEY A/41 | 345663343 | C-HSG-A0 | G-CAP-0-P | TPA-A0 | RS | LS | MAL | CPA | MSEAL | RSEAL | - 71 70 - 68 - - - 64 - 62 61 - 59 58 - - 55 54 -<br>52 51 50 - 48 - 46 45 - - - 41 - 39 38 - - - 34 -<br>- 32 - - - 27 - 25 - 23 22 - - 19 18 -<br>- - - - 12 - - 9 8 7 6 - - - - - | SALEABLE | | 345650003 |
| MX123 CONN ASSY 73 CKT GRY OPT0 KEY B/23 | 345663353 | C-HSG-B0 | G-CAP-0-P | TPA-B0 | RS | LS | MAL | CPA | MSEAL | RSEAL | 72 71 70 69 - - 66 65 - 63 62 61 60 - - 57 56 55 - 53<br>52 51 50 49 48 47 - - 44 43 42 41 40 - - 37 36 35 34 33<br>- 31 - - - - 26 25 24 - - 21 20 19 18 -<br>16 15 14 13 - 11 - 9 - 7 6 5 4 3 2 - | SALEABLE | | 345650003 |
| MX123 CONN ASSY 73 CKT BLK OPT0 KEY A/45 | 345663363 | C-HSG-A0 | G-CAP-0-P | TPA-A0 | RS | LS | MAL | CPA | MSEAL | RSEAL | 72 - 70 - - 67 66 - - - 62 - 60 - 58 - - 55 - 53<br>- 51 - - 48 - 46 45 44 43 - - - - - - - 35 - -<br>- - - - - - - 25 - - - 21 - - - 17<br>- 15 14 - - - - - 8 7 6 5 4 3 2 - | SALEABLE | | 345650003 |
| MX123 CONN ASSY 73 CKT BLU OPT9 KEY C/41 | 345663373 | C-HSG-C9 | G-CAP-9-P | TPA-C9 | RS | LS | MAL | CPA | MSEAL | RSEAL | - 71 - 69 - - - 65 64 - - 61 60 - 58 - - - 54 -<br>- - 50 49 - - - 45 - 43 - 41 - - - 37 36 35 - -<br>- 31 - 29 28 27 - - 24 23 - - 20 - - 17<br>16 - - 13 12 11 - - 8 7 - - - - 2 1 | SALEABLE | | 345650003 |
| MX123 CONN ASSY 73 CKT BLK OPT0 KEY A/44 | 345663383 | C-HSG-A0 | G-CAP-0-P | TPA-A0 | RS | LS | MAL | CPA | MSEAL | RSEAL | 72 71 - - - 67 66 - - - 62 - 60 - - - - 55 - 53<br>- 51 - - - - 46 45 44 43 - - 40 39 - - - 35 - -<br>- - - - - - - 25 - - 22 21 - - - 17<br>- 15 14 - - - - - 8 7 6 5 4 3 2 - | SALEABLE | | 345650003 |
| MX123 CONN ASSY 73 CKT BLU OPT0 KEY C/35 | 345663393 | C-HSG-C0 | G-CAP-0-P | TPA-C0 | RS | LS | MAL | CPA | MSEAL | RSEAL | - 71 - 69 - - - 65 64 - - 61 60 - 58 - 56 55 54 -<br>- - 50 49 - - - 45 - 43 - 41 - - 38 37 36 35 - -<br>- 31 - 29 28 27 - - 24 23 - - 20 19 18 17<br>16 - - 13 12 11 - - 8 7 - - - 3 2 1 | SALEABLE | | 345650003 |
| MX123 CONN ASSY 73 CKT BLK OPT0 KEY A/6 | 345663403 | C-HSG-A0 | G-CAP-0-P | TPA-A0 | RS | LS | MAL | CPA | MSEAL | RSEAL | - - - - - - - 65 - - - 61 - - - - - - - -<br>- - - - - - - 45 - - - - - - - - - - - -<br>- - - - - - 26 - - - - - - - - -<br>- - - - - - 10 - - - - - - - - - | SALEABLE | | 345650003 |
| MX123 CONN ASSY 73 CKT BLK OPT0 KEY A/45 | 345663413 | C-HSG-A0 | G-CAP-0-P | TPA-A0 | RS | LS | MAL | CPA | MSEAL | RSEAL | - 71 - 69 68 - - - 64 63 62 - 60 59 - - 56 - - 53<br>52 51 - - 48 - 46 - - - - - 40 - 38 - 36 - 34 33<br>- 31 - 29 28 - - - - 23 22 - - - - -<br>- - 14 - 12 - - - - 7 - - 4 - - - | SALEABLE | | 345650003 |

| ASSEMBLY DESCRIPTION | ASSEMBLY PART NUMBER | CONNECTOR HOUSING | GROMMET CAP | TPA | RIGHT SLIDE | LEFT SLIDE | MATE ASSIST LEVER | CPA | MAT SEAL | RING SEAL | BLOCKED TERMINALS<br>CAVITY WITH A NUMBER INDICATES BLOCKED TERMINAL POSITION<br>CAVITY WITHOUT A NUMBER INDICATES OPEN TERMINAL POSITION | STATUS | COMMENTS | INTEGRAL COMPONENTS SOLD SEPARATELY<br>DRESS COVER |
|---|---|---|---|---|---|---|---|---|---|---|---|---|---|---|
| MX123 CONN ASSY 73 CKT BLU OPT9 KEY C/31 | 345663423 | C-HSG-C9 | G-CAP-9-P | TPA-C9 | RS | LS | MAL | CPA | MSEAL | RSEAL | 72 71 70 - 68 67 66 65 64 - 62 61 60 59 - 57 - - - -<br>- - 50 - 48 47 46 45 - - - - 40 39 38 37 - - - -<br>- - 31 30 29 - 27 - 25 24 23 22 21 20 - - -<br>- - 15 14 13 - 11 - 9 8 7 6 5 4 - - - | SALEABLE | | 345650003 |
| MX123 CONN ASSY 73 CKT BLU OPT9 KEY C/30 | 345663433 | C-HSG-C9 | G-CAP-9-P | TPA-C9 | RS | LS | MAL | CPA | MSEAL | RSEAL | - 71 - 69 68 67 - 65 64 - - 61 60 - 58 - - - 54 -<br>- - 50 49 48 47 - 45 - 43 - 41 - - 38 37 36 35 - -<br>- 32 31 - 29 28 27 - - 24 23 - - 20 19 18 17<br>16 - - 13 12 11 - - 8 7 - 5 4 3 2 1 | SALEABLE | | 345650003 |
| MX123 CONN ASSY 73 CKT BLK OPT0 KEY A/36 | 345663443 | C-HSG-A0 | G-CAP-0-P | TPA-A0 | RS | LS | MAL | CPA | MSEAL | RSEAL | 72 - 70 - 68 67 66 - - - 62 61 - 59 58 - - - - -<br>- - 50 - 48 47 46 - - - - - 40 39 38 - - - - -<br>- 31 - 29 - 27 - 25 24 - 22 21 20 - - 17<br>- 15 14 13 - 11 - 9 8 7 6 5 4 - 2 1 | SALEABLE | | 345650003 |
| MX123 CONN ASSY 73 CKT BLK OPT0 KEY A/6 | 345663453 | C-HSG-A0 | G-CAP-0-P | TPA-A0 | RS | LS | MAL | CPA | MSEAL | RSEAL | 72 71 70 69 68 67 66 65 64 63 62 - 60 59 58 57 56 55 54 53<br>52 51 50 49 48 47 46 45 44 43 42 41 40 39 38 37 36 35 34 33<br>32 31 30 29 28 27 26 25 24 23 22 21 - 19 18 17<br>16 15 14 13 12 11 10 - 8 7 6 - 4 3 2 - | SALEABLE | | 345650003 |
| MX123 CONN ASSY 73 CKT GRY OPT9 KEY B/54 | 345663473 | C-HSG-B9 | G-CAP-9-P | TPA-B9 | RS | LS | MAL | CPA | MSEAL | RSEAL | - - - - - - - - - 63 - - - - - - - - - 53<br>- - - - 48 47 - 45 - 43 42 41 - 39 - - - 35 34 33<br>- - - - - - 26 - - 23 22 - - 19 - -<br>- - - - - - 11 - - 8 - - - - - - 1 | SALEABLE | | 345650003 |
| MX123 CONN ASSY 73 CKT GRY OPT0 KEY B/51 | 345663483 | C-HSG-B0 | G-CAP-0-P | TPA-B0 | RS | LS | MAL | CPA | MSEAL | RSEAL | - - - - - - - - 64 63 62 - - 59 58 - - - - 53<br>- - - - - 47 - 45 - 43 42 41 - 39 - - - 35 34 33<br>- - - - - - 26 25 - 23 22 - - - - -<br>- - - - - - - - 8 - - - - 3 - 1 | SALEABLE | | 345650003 |
| MX123 CONN ASSY 73 CKT BLK OPT0 KEY A/44 | 345663493 | C-HSG-A0 | G-CAP-0-P | TPA-A0 | RS | LS | MAL | CPA | MSEAL | RSEAL | - 71 - 69 68 - - - 64 63 62 - 60 59 - - 56 - - 53<br>52 51 50 - 48 - 46 - - - - - 40 - 38 - 36 - 34 33<br>- 31 - 29 28 - - - - 23 22 - - - - -<br>- - 14 - 12 - - - - 7 - - - - - 1 | SALEABLE | | 345650003 |
| MX123 CONN ASSY 73 CKT BLK OPT0 KEY A/32 | 345663503 | C-HSG-A0 | G-CAP-0-P | TPA-A0 | RS | LS | MAL | CPA | MSEAL | RSEAL | - - 70 - - - - 65 - - - 61 - - 58 57 56 55 54 53<br>- 51 50 - - 47 - 45 - - - 41 - - 38 37 36 - 34 -<br>- 31 30 - 28 - 26 25 - - 22 21 20 19 18 -<br>16 15 - - - - 10 - - - - - - - - - | SALEABLE | | 345650003 |
| MX123 CONN ASSY 73 CKT BLK OPT0 KEY A/37 | 345663513 | C-HSG-A0 | G-CAP-0-P | TPA-A0 | RS | LS | MAL | CPA | MSEAL | RSEAL | 72 71 - - 68 67 66 65 64 - - - - 59 - - - - - -<br>- - 50 - 48 47 46 45 - - - - 40 39 38 - - 35 - 33<br>- 31 30 - - - - 25 24 23 22 21 20 - - 17<br>- - 14 - - - - 9 8 7 6 5 4 - 2 1 | SALEABLE | | 345650003 |
| MX123 CONN ASSY 73 CKT BLK OPT0 KEY A/31 | 345663523 | C-HSG-A0 | G-CAP-0-P | TPA-A0 | RS | LS | MAL | CPA | MSEAL | RSEAL | - 71 - 69 68 67 - 65 64 - - 61 60 59 58 57 - - - 53<br>- 51 50 - 48 47 46 45 44 - - 41 40 39 38 37 - - - 33<br>32 - 30 29 - 27 - 25 24 23 22 - - - - 17<br>- - 14 13 - 11 - - 8 7 6 - 4 3 - - | SALEABLE | | 345650003 |
| MX123 CONN ASSY 73 CKT BLK OPT9 KEY A/31 | 345663533 | C-HSG-A9 | G-CAP-9-P | TPA-A9 | RS | LS | MAL | CPA | MSEAL | RSEAL | 72 71 70 - 68 67 66 65 64 - 62 61 60 59 - 57 - - - -<br>- - 50 - 48 47 46 45 - - - - 40 39 38 37 - - - -<br>- 31 30 29 - 27 - 25 24 23 22 21 20 - - -<br>- 15 14 13 - 11 - 9 8 7 6 5 4 - - - | SALEABLE | | 345650003 |
| MX123 CONN ASSY 73 CKT BLK OPT9 KEY A/30 | 345663543 | C-HSG-A9 | G-CAP-9-P | TPA-A9 | RS | LS | MAL | CPA | MSEAL | RSEAL | - 71 - 69 68 67 - 65 64 - - 61 60 - 58 - - - 54 -<br>- - 50 49 48 47 - 45 - 43 - 41 - - 38 37 36 35 - -<br>- 32 31 - 29 28 27 - - 24 23 - - 20 19 18 17<br>16 - - 13 12 11 - - 8 7 - 5 4 3 2 1 | SALEABLE | | 345650003 |

molex

MX123 SEALED RCPT ASSY (73 Ckt)
BOM & PIN OUT SHEET

| ASSEMBLY DESCRIPTION | ASSEMBLY PART NUMBER | CONNECTOR HOUSING | GROMMET CAP | TPA | RIGHT SLIDE | LEFT SLIDE | MATE ASSIST LEVER | CPA | MAT SEAL | RING SEAL | BLOCKED TERMINALS<br>CAVITY WITH A NUMBER INDICATES BLOCKED TERMINAL POSITION<br>CAVITY WITHOUT A NUMBER INDICATES OPEN TERMINAL POSITION | STATUS | COMMENTS | INTEGRAL COMPONENTS SOLD SEPARATELY<br>DRESS COVER |
|---|---|---|---|---|---|---|---|---|---|---|---|---|---|---|
| MX123 CONN ASSY 73 CKT BLU OPT9 KEY C/60 | 345663553 | C-HSG-C9 | G-CAP-9-P | TPA-C9 | RS | LS | MAL | CPA | MSEAL | RSEAL | - - - - - - - - 64 - - - 60 - - - - - - -<br>52 - - - - 47 - - - - - - - - - - 37 - - - -<br>- 32 - - - - - - - 24 23 - 21 - - - -<br>- - - 13 12 - - - 8 - - - 4 - - - | SALEABLE | | 345650003 |
| MX123 CONN ASSY 73 CKT BLU OPT9 KEY C/37 | 345663563 | C-HSG-C9 | G-CAP-9-P | TPA-C9 | RS | LS | MAL | CPA | MSEAL | RSEAL | - 71 - 69 - - - 65 64 - - 61 60 - 58 - 56 55 54 -<br>- - 50 49 - - - 45 - 43 - 41 - - - 37 36 35 - -<br>- 31 - 29 28 - - - 24 23 - - 20 19 18 17<br>16 - - 13 12 11 - - 8 7 - - - 3 2 1 | SALEABLE | | 345650003 |
| MX123 CONN ASSY 73 CKT BLU OPT9 KEY C/41 | 345663573 | C-HSG-C9 | G-CAP-9-P | TPA-C9 | RS | LS | MAL | CPA | MSEAL | RSEAL | 72 71 - - - 67 66 65 64 - - - 60 59 - - - - - -<br>- - - - - - 46 45 - - - - 40 39 38 - - 35 - 33<br>- 31 30 - - - - 25 24 23 22 21 20 - - 17<br>- - - - - - - 9 8 7 6 5 4 - 2 1 | SALEABLE | | 345650003 |
| MX123 CONN ASSY 73 CKT BLK OPT9 KEY A/38 | 345663583 | C-HSG-A9 | G-CAP-9-P | TPA-A9 | RS | LS | MAL | CPA | MSEAL | RSEAL | 72 71 - - 68 67 66 65 64 - - - 60 59 - - - - - -<br>- - - - 48 47 46 45 - - - - 40 39 38 - - 35 - 33<br>- 31 30 - - - - 25 24 23 22 21 20 - - 17<br>- - - - - - - 9 8 7 6 5 4 - 2 1 | SALEABLE | | 345650003 |
| MX123 CONN ASSY 73 CKT BLK OPT0 KEY A/36 | 345663593 | C-HSG-A0 | G-CAP-0-P | TPA-A0 | RS | LS | MAL | CPA | MSEAL | RSEAL | 72 - 70 - 68 67 66 65 - - 62 61 - 59 - - - - - -<br>- - 50 - 48 47 46 - - - - - 40 39 38 - - - - -<br>- 31 - 29 - 27 - 25 24 23 22 21 20 - - 17<br>- - 14 13 - 11 - 9 8 7 6 5 4 - 2 1 | SALEABLE | | 345650003 |
| MX123 CONN ASSY 73 CKT GRY OPT0 KEY B/52 | 345663603 | C-HSG-B0 | G-CAP-0-P | TPA-B0 | RS | LS | MAL | CPA | MSEAL | RSEAL | 72 71 70 69 - 67 66 65 - 63 62 61 60 - 58 - 56 - 54 -<br>52 51 50 - - 47 - 45 44 43 42 41 40 - 38 - 36 - 34 -<br>- 31 30 - 28 27 26 25 24 - 22 - 20 19 - 17<br>16 15 14 13 12 - - 9 8 - 6 5 4 3 2 1 | SALEABLE | | 345650003 |
| MX123 CONN ASSY 73 CKT GRY OPT0 KEY B/20 | 345663613 | C-HSG-B0 | G-CAP-0-P | TPA-B0 | RS | LS | MAL | CPA | MSEAL | RSEAL | 72 71 70 69 - - 66 65 - - 62 61 60 - 58 57 56 55 54 53<br>52 51 50 49 48 47 - - 44 - 42 41 40 - 38 37 36 35 34 33<br>- 31 - - - - 26 25 24 23 22 21 20 19 18 17<br>16 15 14 13 12 11 - 9 8 7 - - - - 2 1 | SALEABLE | | 345650003 |
| MX123 CONN ASSY 73 CKT BLK OPT0 KEY A/40 | 345663623 | C-HSG-A0 | G-CAP-0-P | TPA-A0 | RS | LS | MAL | CPA | MSEAL | RSEAL | - 71 - - 68 67 66 65 64 - - - - - - - - - -<br>- - 50 - 48 47 46 45 - - - - 40 39 38 - - 35 - 33<br>- 31 30 - - - - 25 24 23 22 21 20 - - 17<br>- - 14 - - - - 9 - 7 6 5 4 - 2 1 | SALEABLE | | 345650003 |
| MX123 CONN ASSY 73 CKT BLU OPT0 KEY C/42 | 345663633 | C-HSG-C0 | G-CAP-0-P | TPA-C0 | RS | LS | MAL | CPA | MSEAL | RSEAL | - 71 - 69 - - - 65 64 - - 61 60 - 58 - 56 55 54 -<br>- - 50 49 - - - 45 - 43 42 41 - - - - - 35 - -<br>- 31 - 29 28 27 - - - - - - 20 19 18 17<br>16 - - 13 12 11 - - - - - - - 3 - 1 | SALEABLE | | 345650003 |
| MX123 CONN ASSY 73 CKT GRY OPT0 KEY B/38 | 345663643 | C-HSG-B0 | G-CAP-0-P | TPA-B0 | RS | LS | MAL | CPA | MSEAL | RSEAL | - - - 69 - - - 65 - - 62 61 60 - 58 57 56 55 54 -<br>- - - 49 - - - 45 44 43 42 41 40 - 38 37 36 35 - -<br>- - - - - - - - - 23 22 21 20 19 18 -<br>- - - - 12 11 - 9 - 7 6 5 4 3 - - | SALEABLE | | 345650003 |
| MX123 CONN ASSY 73 CKT GRY OPT0 KEY B/44 | 345663653 | C-HSG-B0 | G-CAP-0-P | TPA-B0 | RS | LS | MAL | CPA | MSEAL | RSEAL | - - - - - 67 - - - - 62 61 60 - 58 57 56 55 54 -<br>- - - - - - - - - - 42 41 40 - 38 37 36 35 - -<br>- 31 - - - - - - - 23 22 21 20 19 18 -<br>- 15 - - - - - 9 - 7 6 5 4 - - - | SALEABLE | | 345650003 |
| MX123 CONN ASSY 73 CKT BLK OPT0 KEY A/41 | 345663663 | C-HSG-A0 | G-CAP-0-P | TPA-A0 | RS | LS | MAL | CPA | MSEAL | RSEAL | - 71 - - 68 67 66 65 64 - - - - - - - - - -<br>- - 50 - 48 47 46 45 - - - - 40 39 38 - - 35 - 33<br>- 31 30 - - - - 25 24 23 22 21 20 - - 17<br>- - 14 - - - - 9 8 - - 5 4 - 2 1 | SALEABLE | | 345650003 |

| ASSEMBLY DESCRIPTION | ASSEMBLY PART NUMBER | CONNECTOR HOUSING | GROMMET CAP | TPA | RIGHT SLIDE | LEFT SLIDE | MATE ASSIST LEVER | CPA | MAT SEAL | RING SEAL | BLOCKED TERMINALS<br>CAVITY WITH A NUMBER INDICATES BLOCKED TERMINAL POSITION<br>CAVITY WITHOUT A NUMBER INDICATES OPEN TERMINAL POSITION | STATUS | COMMENTS | INTEGRAL COMPONENTS SOLD SEPARATELY<br>DRESS COVER |
|---|---|---|---|---|---|---|---|---|---|---|---|---|---|---|
| MX123 CONN ASSY 73 CKT BLU OPT9 KEY C/54 | 345663673 | C-HSG-C9 | G-CAP-9-P | TPA-C9 | RS | LS | MAL | CPA | MSEAL | RSEAL | 72 - - - - - 66 - 64 - - - 60 - - - - - - -<br>52 - - - - 47 46 - - - - - - - - 37 - - - -<br>- 32 - - - - - - 25 24 23 - 21 - - - -<br>- - - 13 12 11 10 - 8 - - - 4 - - - | SALEABLE | | 345650003 |
| MX123 CONN ASSY 73 CKT BLU OPT0 KEY C/37 | 345663693 | C-HSG-C0 | G-CAP-0-P | TPA-C0 | RS | LS | MAL | CPA | MSEAL | RSEAL | - 71 - 69 - - - 65 64 - - 61 60 - 58 - 56 55 54 -<br>- - 50 49 - - - 45 - 43 - 41 - - - 37 36 35 - -<br>- 31 - 29 28 - - - 24 23 - - 20 19 18 17<br>16 - - 13 12 11 - - 8 7 - - - 3 2 1 | SALEABLE | | 345650003 |
| MX123 CONN ASSY 73 CKT BLK OPT0 KEY A/55 | 345663703 | C-HSG-A0 | G-CAP-0-P | TPA-A0 | RS | LS | MAL | CPA | MSEAL | RSEAL | 72 71 70 69 - - - - 64 63 62 61 60 - 58 57 56 - 54 -<br>52 51 50 - - - 46 45 - 43 42 41 40 - 38 37 36 - 34 -<br>32 31 30 - - 27 26 25 24 - 22 21 20 19 18 17<br>16 15 14 13 12 11 10 9 8 - 6 5 4 3 2 1 | SALEABLE | | 345650003 |
| MX123 CONN ASSY 73 CKT BLU OPT0 KEY C/36 | 345663713 | C-HSG-C0 | G-CAP-0-P | TPA-C0 | RS | LS | MAL | CPA | MSEAL | RSEAL | - 71 - 69 - - - 65 64 - - 61 60 - 58 - 56 55 54 -<br>- - 50 49 - - - 45 - 43 - 41 - - 38 37 36 35 - -<br>- 31 - 29 28 - - - 24 23 - - 20 19 18 17<br>16 - - 13 12 11 - - 8 7 - - - 3 2 1 | SALEABLE | | 345650003 |
| MX123 CONN ASSY 73 CKT BLK OPT0 KEY A/38 | 345663723 | C-HSG-A0 | G-CAP-0-P | TPA-A0 | RS | LS | MAL | CPA | MSEAL | RSEAL | 72 71 - - 68 67 66 65 64 - - - 60 59 - - - - - -<br>- - - - 48 47 46 45 - - - - 40 39 38 - - 35 - 33<br>- 31 30 - - - - 25 24 23 22 21 20 - - 17<br>- - - - - - - 9 8 7 6 5 4 - 2 1 | SALEABLE | | 345650003 |
| MX123 CONN ASSY 73 CKT GRY OPT0 KEY B/50 | 345663733 | C-HSG-B0 | G-CAP-0-P | TPA-B0 | RS | LS | MAL | CPA | MSEAL | RSEAL | - - - 69 - - - 65 64 63 - - - - - - - - -<br>- - - 49 - - - 45 44 43 - - - - - - - - - -<br>- - - - - - - - - - 22 21 20 19 18 17<br>- - - - 12 11 - - - 7 6 5 4 3 2 1 | SALEABLE | | 345650003 |
| MX123 CONN ASSY 73 CKT BLU OPT0 KEY C/36 | 345663743 | C-HSG-C0 | G-CAP-0-P | TPA-C0 | RS | LS | MAL | CPA | MSEAL | RSEAL | - 71 - 69 - 67 - 65 64 - - 61 60 - 58 - 56 55 54 -<br>- - 50 49 - - - 45 - 43 - 41 - - - 37 36 35 - -<br>- 31 - 29 28 - - - 24 23 - - 20 19 18 17<br>16 - - 13 12 11 - - 8 7 - - - 3 2 1 | SALEABLE | | 345650003 |
| MX123 CONN ASSY 73 CKT BLU OPT0 KEY C/35 | 345663753 | C-HSG-C0 | G-CAP-0-P | TPA-C0 | RS | LS | MAL | CPA | MSEAL | RSEAL | - 71 - 69 - 67 - 65 64 - - 61 60 - 58 - 56 55 54 -<br>- - 50 49 - - - 45 - 43 - 41 - - 38 37 36 35 - -<br>- 31 - 29 28 - - - 24 23 - - 20 19 18 17<br>16 - - 13 12 11 - - 8 7 - - - 3 2 1 | SALEABLE | | 345650003 |
| MX123 CONN ASSY 73 CKT BLU OPT0 KEY C/37 | 345663763 | C-HSG-C0 | G-CAP-0-P | TPA-C0 | RS | LS | MAL | CPA | MSEAL | RSEAL | - 71 - 69 - 67 - 65 64 - - 61 60 - 58 - - - 54 -<br>- - 50 49 - - - 45 - 43 - 41 - - 38 37 36 35 - -<br>- 31 - 29 28 - - - 24 23 - - 20 19 18 17<br>16 - - 13 12 11 - - 8 7 - - - 3 2 1 | SALEABLE | | 345650003 |
| MX123 CONN ASSY 73 CKT BLK OPT0 KEY A/31 | 345663773 | C-HSG-A0 | G-CAP-0-P | TPA-A0 | RS | LS | MAL | CPA | MSEAL | RSEAL | 72 71 - - 68 67 66 65 64 - 62 61 60 59 - 57 - - - -<br>- - - - 48 47 46 45 - - - - 40 - 38 37 - 35 - 33<br>- 31 30 29 - 27 - 25 24 23 22 21 20 - - 17<br>- - - 13 - 11 - 9 8 7 6 5 4 - 2 1 | SALEABLE | | 345650003 |
| MX123 CONN ASSY 73 CKT BLK OPT0 KEY A/34 | 345663783 | C-HSG-A0 | G-CAP-0-P | TPA-A0 | RS | LS | MAL | CPA | MSEAL | RSEAL | 72 71 - - 68 67 66 65 64 - 62 61 60 59 - 57 - - - -<br>- - - - 48 47 46 45 - - - - 40 - 38 37 - 35 - 33<br>- 31 30 29 - 27 - 25 24 23 22 21 20 - - -<br>- - - 13 - 11 - 9 8 7 6 5 4 - - - | SALEABLE | | 345650003 |
| MX123 CONN ASSY 73 CKT BLK OPT0 KEY A/38 | 345663793 | C-HSG-A0 | G-CAP-0-P | TPA-A0 | RS | LS | MAL | CPA | MSEAL | RSEAL | 72 - - 69 68 67 66 65 - - 62 61 - 59 - - - - - -<br>- - 50 - 48 47 46 - - - - - 40 39 38 - - 35 - 33<br>- 31 - 29 - 27 - 25 24 - 22 - 20 - - 17<br>- - 14 13 - 11 - 9 - 7 6 - 4 - 2 1 | SALEABLE | | 345650003 |

| ASSEMBLY DESCRIPTION | ASSEMBLY PART NUMBER | CONNECTOR HOUSING | GROMMET CAP | TPA | RIGHT SLIDE | LEFT SLIDE | MATE ASSIST LEVER | CPA | MAT SEAL | RING SEAL | BLOCKED TERMINALS<br>CAVITY WITH A NUMBER INDICATES BLOCKED TERMINAL POSITION<br>CAVITY WITHOUT A NUMBER INDICATES OPEN TERMINAL POSITION | STATUS | COMMENTS | INTEGRAL COMPONENTS SOLD SEPARATELY<br>DRESS COVER |
|---|---|---|---|---|---|---|---|---|---|---|---|---|---|---|
| MX123 CONN ASSY 73 CKT BLK OPT0 KEY A/32 | 345663803 | C-HSG-A0 | G-CAP-0-P | TPA-A0 | RS | LS | MAL | CPA | MSEAL | RSEAL | - - 70 - - - - 65 - - - 61 60 - 58 57 - 55 54 -<br>52 51 - 49 - 47 - 45 - - - 41 40 - 38 37 - - 34 -<br>- - 31 - - 28 - 26 25 24 - 22 21 - 19 18 -<br>- 16 15 - - - - - - - 7 6 - - - - - | SALEABLE | | 345650003 |
| MX123 CONN ASSY 73 CKT BLU OPT0 KEY C/42 | 345663813 | C-HSG-C0 | G-CAP-0-P | TPA-C0 | RS | LS | MAL | CPA | MSEAL | RSEAL | - 71 - 69 - 67 - 65 64 - - 61 60 - 58 - 56 55 54 -<br>- - 50 49 - - - 45 - 43 - 41 - - - - - 35 - -<br>- - 31 - 29 28 27 - - - 23 - - - 19 18 17<br>- 16 - - - 12 11 - - - 7 - - - 3 - 1 | SALEABLE | | 345650003 |
| MX123 CONN ASSY 73 CKT BLK OPT0 KEY A/30 | 345663823 | C-HSG-A0 | G-CAP-0-P | TPA-A0 | RS | LS | MAL | CPA | MSEAL | RSEAL | 72 71 - - 68 67 66 65 64 - 62 - 60 59 - - - - - -<br>- - 50 - 48 47 46 45 - - 42 - 40 39 38 - - 35 - 33<br>- - 31 30 29 28 - - 25 24 23 22 21 20 - - 17<br>- - - 14 13 12 - - 9 8 7 6 5 4 - 2 1 | SALEABLE | | 345650003 |
| MX123 CONN ASSY 73 CKT BLK OPT0 KEY A/37 | 345663833 | C-HSG-A0 | G-CAP-0-P | TPA-A0 | RS | LS | MAL | CPA | MSEAL | RSEAL | 72 71 - - 68 67 66 65 64 - - - 60 59 58 - - - - -<br>- - 50 - 48 47 46 45 - - - - 40 39 38 - - 35 - 33<br>- - 31 30 - - - - 25 24 - 22 21 20 - - 17<br>- - 14 - - - - 9 - 7 6 5 4 - 2 1 | SALEABLE | | 345650003 |
| MX123 CONN ASSY 73 CKT BLK OPT0 KEY A/51 | 345663843 | C-HSG-A0 | G-CAP-0-P | TPA-A0 | RS | LS | MAL | CPA | MSEAL | RSEAL | - - - - - - - 65 - - - 61 - - 58 57 56 - - -<br>- 51 50 - - 47 46 45 - - - - - - 38 37 36 - - -<br>- 31 30 - - - 26 - - - 22 21 20 - - -<br>- 15 14 - - - 10 - - - - - - - - - | SALEABLE | | 345650003 |
| MX123 CONN ASSY 73 CKT BLK OPT0 KEY A/53 | 345663853 | C-HSG-A0 | G-CAP-0-P | TPA-A0 | RS | LS | MAL | CPA | MSEAL | RSEAL | - - - - - - - - - - 61 - - 58 57 56 - - -<br>- 51 50 - - 47 46 - - - - - - - 38 37 36 - - -<br>- 31 30 - - - 26 - - - 22 21 20 - - -<br>- 15 14 - - - 10 - - - - - - - - - | SALEABLE | | 345650003 |
| MX123 CONN ASSY 73 CKT GRY OPT0 KEY B/51 | 345663863 | C-HSG-B0 | G-CAP-0-P | TPA-B0 | RS | LS | MAL | CPA | MSEAL | RSEAL | - - - 69 - - - 65 64 63 - - - - - - - - -<br>- - - 49 - - - 45 44 43 - - - - - - - - -<br>- - - - - - - - - 23 22 21 20 19 18 -<br>- - - - 12 11 - 9 - 7 6 5 4 3 - - | SALEABLE | | 345650003 |
| MX123 CONN ASSY 73 CKT GRY OPT0 KEY B/34 | 345663873 | C-HSG-B0 | G-CAP-0-P | TPA-B0 | RS | LS | MAL | CPA | MSEAL | RSEAL | 72 71 70 69 68 67 66 65 64 - 62 61 60 - - - - - 54 53<br>52 51 - - - 47 - - 44 - 42 41 40 - - - - - - 33<br>32 31 30 - 28 - 26 25 24 - - - 20 19 - 17<br>- - - - 12 11 10 9 8 - - - - - 2 1 | SALEABLE | | 345650003 |
| MX123 CONN ASSY 73 CKT GRY OPT0 KEY B/35 | 345663883 | C-HSG-B0 | G-CAP-0-P | TPA-B0 | RS | LS | MAL | CPA | MSEAL | RSEAL | 72 71 70 69 68 - - 65 64 63 62 61 60 - - - - - 54 -<br>52 51 - - - 47 46 - 44 43 42 41 40 - - - - - - -<br>32 31 30 - 28 27 26 25 24 - - - 20 19 - 17<br>- - - - 12 11 10 9 - - - - - - 2 1 | SALEABLE | | 345650003 |
| MX123 CONN ASSY 73 CKT BLU OPT0 KEY C/34 | 345663893 | C-HSG-C0 | G-CAP-0-P | TPA-C0 | RS | LS | MAL | CPA | MSEAL | RSEAL | - 71 - 69 - - - 65 64 - - 61 60 - 58 - 56 55 54 -<br>- - 50 49 - - - 45 - 43 - 41 40 39 38 37 36 35 - -<br>- 31 - 29 28 - - - 24 23 - - 20 19 18 17<br>16 - - 13 12 11 - - 8 7 - - - 3 2 1 | SALEABLE | | 345650003 |
| MX123 CONN ASSY 73 CKT GRY OPT0 KEY B/54 | 345663903 | C-HSG-B0 | G-CAP-0-P | TPA-B0 | RS | LS | MAL | CPA | MSEAL | RSEAL | 72 71 70 69 68 67 66 - 64 63 62 61 60 - 58 - 56 - 54 -<br>52 51 50 - - 47 - 45 - 43 42 41 40 - 38 - 36 - 34 -<br>32 31 30 - - 27 26 25 - - 22 - 20 19 18 17<br>16 15 14 13 12 11 10 9 8 - 6 5 4 3 2 1 | SALEABLE | | 345650003 |
| MX123 CONN ASSY 73 CKT BLK OPT0 KEY A/39 | 345663913 | C-HSG-A0 | G-CAP-0-P | TPA-A0 | RS | LS | MAL | CPA | MSEAL | RSEAL | 72 - - - 68 67 66 65 - - 62 61 - 59 - - - - - -<br>- - 50 - 48 47 46 - - - - - 40 39 38 - - 35 - 33<br>- 31 - 29 - 27 - 25 24 - 22 - 20 - - 17<br>- - 14 13 - 11 - 9 - 7 6 - 4 - 2 1 | SALEABLE | | 345650003 |

| ASSEMBLY DESCRIPTION | ASSEMBLY PART NUMBER | CONNECTOR HOUSING | GROMMET CAP | TPA | RIGHT SLIDE | LEFT SLIDE | MATE ASSIST LEVER | CPA | MAT SEAL | RING SEAL | BLOCKED TERMINALS<br>CAVITY WITH A NUMBER INDICATES BLOCKED TERMINAL POSITION<br>CAVITY WITHOUT A NUMBER INDICATES OPEN TERMINAL POSITION | STATUS | COMMENTS | INTEGRAL COMPONENTS SOLD SEPARATELY<br>DRESS COVER |
|---|---|---|---|---|---|---|---|---|---|---|---|---|---|---|
| MX123 CONN ASSY 73 CKT GRY OPT0 KEY B/36 | 345663923 | C-HSG-B0 | G-CAP-0-P | TPA-B0 | RS | LS | MAL | CPA | MSEAL | RSEAL | - 71 - 69 - 67 - 65 64 63 62 61 - - 58 57 56 - - -<br>- 51 - 49 - 47 - 45 44 43 42 41 - - 38 37 36 - - -<br>- - - - - - - - - - 22 21 20 - - 17<br>- - 15 14 13 12 11 - - - - 6 5 4 3 2 1 | SALEABLE | | 345650003 |
| MX123 CONN ASSY 73 CKT BLK OPT0 KEY A/35 | 345663933 | C-HSG-A0 | G-CAP-0-P | TPA-A0 | RS | LS | MAL | CPA | MSEAL | RSEAL | 72 - - - 68 67 66 65 - - 62 61 - 59 - - - - - -<br>- - 50 - 48 47 46 - - - - - 40 39 38 - - 35 - 33<br>- 31 - 29 - 27 - 25 24 23 22 21 20 - - 17<br>- - 14 13 - 11 - 9 8 7 6 5 4 - 2 1 | SALEABLE | | 345650003 |
| MX123 CONN ASSY 73 CKT BLU OPT0 KEY C/32 | 345663943 | C-HSG-C0 | G-CAP-0-P | TPA-C0 | RS | LS | MAL | CPA | MSEAL | RSEAL | - 71 - 69 - 67 - 65 64 63 62 61 - - 58 57 56 - - -<br>- 51 - 49 - 47 - 45 44 43 42 41 - - 38 37 36 - - -<br>- - - - - - - - - 23 22 21 20 19 18 17<br>- 15 14 13 12 11 - - - 7 6 5 4 3 2 1 | SALEABLE | | 345650003 |
| MX123 CONN ASSY 73 CKT BLU OPT0 KEY C/35 | 345663953 | C-HSG-C0 | G-CAP-0-P | TPA-C0 | RS | LS | MAL | CPA | MSEAL | RSEAL | - 71 - 69 - 67 66 65 64 - - 61 60 - 58 - 56 55 54 -<br>- - 50 49 - - - 45 - 43 - 41 - - 38 37 36 35 - -<br>- 31 - 29 28 27 - - 24 - - - - 19 18 17<br>16 - - - 12 11 10 9 8 - - - - 3 2 1 | SALEABLE | | 345650003 |
| MX123 CONN ASSY 73 CKT BLU OPT0 KEY C/36 | 345663963 | C-HSG-C0 | G-CAP-0-P | TPA-C0 | RS | LS | MAL | CPA | MSEAL | RSEAL | - 71 - 69 - - - 65 64 - - 61 60 - 58 - 56 55 54 -<br>- - 50 49 - - - 45 - 43 - 41 - - - 37 36 35 - -<br>- 31 - 29 28 27 - - 24 23 - - 20 19 18 17<br>16 - - 13 12 11 - - 8 7 - - - 3 2 1 | SALEABLE | | 345650003 |
| MX123 CONN ASSY 73 CKT BLU OPT0 KEY C/33 | 345663973 | C-HSG-C0 | G-CAP-0-P | TPA-C0 | RS | LS | MAL | CPA | MSEAL | RSEAL | - 71 - 69 - - 66 65 64 - - 61 60 - 58 - 56 55 54 -<br>- - 50 49 - - - 45 - 43 - 41 - - - 37 36 35 - -<br>- 31 - 29 28 27 - - 24 23 - - 20 19 18 17<br>16 - - 13 12 11 10 9 8 7 - - - 3 2 1 | SALEABLE | | 345650003 |
| MX123 CONN ASSY 73 CKT BLK OPT0 KEY A/38 | 345663983 | C-HSG-A0 | G-CAP-0-P | TPA-A0 | RS | LS | MAL | CPA | MSEAL | RSEAL | - - - - 68 67 66 65 - - 62 61 - - - - - - - -<br>- - 50 - 48 47 46 - - - - - - 39 38 - - 35 - 33<br>- 31 - 29 - 27 - 25 24 23 22 21 20 - - 17<br>- - 14 13 - 11 - 9 8 7 6 5 4 - 2 1 | SALEABLE | | 345650003 |
| MX123 CONN ASSY 73 CKT BLK OPT0 KEY A/38 | 345663993 | C-HSG-A0 | G-CAP-0-P | TPA-A0 | RS | LS | MAL | CPA | MSEAL | RSEAL | 72 71 - - 68 67 66 65 64 - - - - 59 - - - - - -<br>- - 50 - 48 47 46 45 - - - - 39 38 - - 35 - 33<br>- 31 30 - - - - 25 24 23 22 21 20 - - 17<br>- - 14 - - - - 9 8 7 6 5 4 - 2 1 | SALEABLE | | 345650003 |
| MX123 CONN ASSY 73 CKT GRY OPT0 KEY B/44 | 345664003 | C-HSG-B0 | G-CAP-0-P | TPA-B0 | RS | LS | MAL | CPA | MSEAL | RSEAL | 72 71 70 69 68 - - 65 - - 62 61 60 - 58 - 56 - 54 -<br>52 51 - - - 47 46 45 44 - 42 41 40 - 38 - 36 - 34 -<br>- 31 30 - 28 - 26 25 - - 22 - 20 19 - 17<br>16 - 14 13 12 11 10 9 8 - - - - - 2 1 | SALEABLE | | 345650003 |
| MX123 CONN ASSY 73 CKT GRY OPT0 KEY B/34 | 345664013 | C-HSG-B0 | G-CAP-0-P | TPA-B0 | RS | LS | MAL | CPA | MSEAL | RSEAL | - 71 - 69 - 67 - 65 64 63 62 61 - - 58 57 56 - - -<br>- 51 - 49 - 47 - 45 44 43 42 41 - - 38 37 36 - - -<br>- - - - - - - - - 23 22 21 20 19 18 -<br>- 15 14 13 12 11 - 9 - 7 6 5 4 3 - - | SALEABLE | | 345650003 |
| MX123 CONN ASSY 73 CKT GRY OPT0 KEY B/49 | 345664023 | C-HSG-B0 | G-CAP-0-P | TPA-B0 | RS | LS | MAL | CPA | MSEAL | RSEAL | - - - 69 - - - 65 64 63 - - - - - - - - - -<br>- - - 49 - - - 45 44 43 - - - - - - - - - -<br>- - - - - - - - - 23 22 21 20 19 18 17<br>- - - - 12 11 - - - 7 6 5 4 3 2 1 | SALEABLE | | 345650003 |
| MX123 CONN ASSY 73 CKT BLU OPT0 KEY C/36 | 345664033 | C-HSG-C0 | G-CAP-0-P | TPA-C0 | RS | LS | MAL | CPA | MSEAL | RSEAL | - 71 - 69 - 67 66 65 64 - - 61 60 - - - 56 55 54 -<br>- - 50 49 - - 46 45 - 43 - 41 - - - 37 36 35 - -<br>- 31 - 29 28 27 - - 24 23 - - - 19 18 -<br>16 - - - 12 11 10 9 8 7 - - - 3 2 - | SALEABLE | | 345650003 |

| ASSEMBLY DESCRIPTION | ASSEMBLY PART NUMBER | CONNECTOR HOUSING | GROMMET CAP | TPA | RIGHT SLIDE | LEFT SLIDE | MATE ASSIST LEVER | CPA | MAT SEAL | RING SEAL | BLOCKED TERMINALS<br>CAVITY WITH A NUMBER INDICATES BLOCKED TERMINAL POSITION<br>CAVITY WITHOUT A NUMBER INDICATES OPEN TERMINAL POSITION | STATUS | COMMENTS | INTEGRAL COMPONENTS SOLD SEPARATELY<br>DRESS COVER |
|---|---|---|---|---|---|---|---|---|---|---|---|---|---|---|
| MX123 CONN ASSY 73 CKT BLK OPT0 KEY A/36 | 345664043 | C-HSG-A0 | G-CAP-0-P | TPA-A0 | RS | LS | MAL | CPA | MSEAL | RSEAL | 72 - - - 68 - 66 65 - - 62 61 - 59 58 - - - - -<br>- - 50 - 48 47 46 - - - - - 40 39 38 - - 35 - 33<br>- - 31 - 29 - 27 - 25 24 - 22 21 20 - - 17<br>- - 14 13 - 11 - 9 8 7 6 5 4 - 2 1 | SALEABLE | | 345650003 |
| MX123 CONN ASSY 73 CKT BLK OPT0 KEY A/43 | 345664053 | C-HSG-A0 | G-CAP-0-P | TPA-A0 | RS | LS | MAL | CPA | MSEAL | RSEAL | - 71 70 - 68 - - - 64 - 62 61 - 59 58 - - 55 54 -<br>52 51 50 - 48 - - 45 - - - 41 - 39 38 - - - 34 -<br>32 - - - - - - 25 - 23 22 - - 19 18 -<br>- - - - 12 - - 9 8 7 6 - - - - - | SALEABLE | | 345650003 |
| MX123 CONN ASSY 73 CKT GRY OPT0 KEY B/24 | 345664063 | C-HSG-B0 | G-CAP-0-P | TPA-B0 | RS | LS | MAL | CPA | MSEAL | RSEAL | 72 71 70 69 - - 66 65 - 63 62 61 60 - - 57 56 55 - 53<br>52 51 50 49 48 47 - - 44 43 42 41 40 - - 37 36 35 34 33<br>- 31 - - - - 26 25 24 - - 21 20 19 18 -<br>16 - 14 - 12 11 - 9 - 7 6 5 4 3 2 - | SALEABLE | | 345650003 |
| MX123 CONN ASSY 73 CKT BLK OPT0 KEY A/36 | 345664073 | C-HSG-A0 | G-CAP-0-P | TPA-A0 | RS | LS | MAL | CPA | MSEAL | RSEAL | - 71 - 69 68 67 - 65 64 - - 61 60 - 58 - - - 54 -<br>- - 50 49 48 47 - 45 - 43 - 41 - - 38 - - 35 - - | SALEABLE | | 345650003 |
| | | | | | | | | | | | - 31 - 29 28 27 - - 24 23 - - 20 - - 17<br>16 - - 13 12 11 - - 8 7 - 5 4 - 2 1 | | | |
| MX123 CONN ASSY 73 CKT BLU OPT0 KEY C/42 | 345664083 | C-HSG-C0 | G-CAP-0-P | TPA-C0 | RS | LS | MAL | CPA | MSEAL | RSEAL | - 71 - 69 - 67 66 65 64 - - 61 60 - - - 56 55 54 -<br>- - 50 49 - - 46 45 - 43 - 41 - - - - - 35 - - | SALEABLE | | 345650003 |
| | | | | | | | | | | | - 31 - 29 28 - - - - 23 - - - 19 18 -<br>16 - - - 12 11 10 9 - 7 - - - 3 - - | | | |
| MX123 CONN ASSY 73 CKT BLK OPT0 KEY A/37 | 345664093 | C-HSG-A0 | G-CAP-0-P | TPA-A0 | RS | LS | MAL | CPA | MSEAL | RSEAL | 72 - - - 68 - 66 65 - - 62 61 - 59 58 - - - - -<br>- - 50 - 48 - 46 - - - - - 40 39 38 - - 35 - 33<br>- - 31 - 29 - 27 - 25 24 - 22 21 20 - - 17<br>- - 14 13 - 11 - 9 8 7 6 5 4 - 2 1 | SALEABLE | | 345650003 |
| MX123 CONN ASSY 73 CKT BLK OPT0 KEY A/29 | 345664103 | C-HSG-A0 | G-CAP-0-P | TPA-A0 | RS | LS | MAL | CPA | MSEAL | RSEAL | - - 70 - - - - 65 - - - 61 - - 58 57 56 55 54 53<br>- 51 50 - - 47 - - - - - 41 - - 38 37 36 - 34 -<br>- 31 30 - 28 - - 25 - - 22 21 20 19 18 -<br>16 15 - - - - - - - - - - - - - - | SALEABLE | | 345650003 |
| MX123 CONN ASSY 73 CKT GRY OPT0 KEY B/19 | 345664113 | C-HSG-B0 | G-CAP-0-P | TPA-B0 | RS | LS | MAL | CPA | MSEAL | RSEAL | 72 71 70 69 - - 66 65 - 63 62 61 60 59 - 57 56 55 54 53<br>52 51 50 49 48 47 - - 44 43 42 41 40 39 - 37 36 35 34 33<br>- 31 - - - - 26 25 24 23 - 21 20 19 18 -<br>16 - 14 - 12 11 - 9 8 7 6 5 4 3 2 - | SALEABLE | | 345650003 |
| MX123 CONN ASSY 73 CKT BLK OPT9 KEY A/42 | 345664123 | C-HSG-A9 | G-CAP-9-P | TPA-A9 | RS | LS | MAL | CPA | MSEAL | RSEAL | - 71 70 - 68 - - - 64 - 62 61 - 59 58 - - 55 54 -<br>52 51 50 - 48 - - 45 - - - 41 - 39 38 - - - 34 -<br>32 - - - - 27 - 25 - 23 22 - - 19 18 -<br>- - - - 12 - - 9 8 7 6 - - - - - | SALEABLE | | 345650003 |
| MX123 CONN ASSY 73 CKT GRY OPT9 KEY B/25 | 345664133 | C-HSG-B9 | G-CAP-9-P | TPA-B9 | RS | LS | MAL | CPA | MSEAL | RSEAL | 72 71 70 69 - - 66 65 - 63 62 61 60 - - 57 56 55 - 53<br>52 51 50 49 48 47 - - 44 43 42 41 40 - - 37 36 35 34 33<br>- 31 - - - - 26 25 24 - - 21 20 19 18 -<br>16 - 14 - 12 11 - - - 7 6 5 4 3 2 - | SALEABLE | | 345650003 |
| MX123 CONN ASSY 73 CKT GRY OPT0 KEY B/22 | 345664143 | C-HSG-B0 | G-CAP-0-P | TPA-B0 | RS | LS | MAL | CPA | MSEAL | RSEAL | 72 71 70 69 - - 66 65 - 63 62 61 60 - - 57 56 55 - 53<br>52 51 50 49 48 47 - - 44 43 42 41 40 - - 37 36 35 34 33<br>- 31 - - - - 26 25 24 - - 21 20 19 18 -<br>16 15 14 13 12 11 - - 8 7 6 5 4 3 2 - | SALEABLE | | 345650003 |
| MX123 CONN ASSY 73 CKT GRY OPT0 KEY B/37 | 345664153 | C-HSG-B0 | G-CAP-0-P | TPA-B0 | RS | LS | MAL | CPA | MSEAL | RSEAL | - 71 - 69 - 67 - 65 64 63 62 61 - - 58 57 56 - - -<br>- 51 - 49 - 47 - 45 - 43 42 41 - - 38 37 36 - - -<br>- - - - - - - - - - 22 21 20 - - 17<br>- 15 14 13 12 11 - - - - 6 5 4 3 2 1 | SALEABLE | | 345650003 |

| ASSEMBLY DESCRIPTION | ASSEMBLY PART NUMBER | CONNECTOR HOUSING | GROMMET CAP | TPA | RIGHT SLIDE | LEFT SLIDE | MATE ASSIST LEVER | CPA | MAT SEAL | RING SEAL | BLOCKED TERMINALS<br>CAVITY WITH A NUMBER INDICATES BLOCKED TERMINAL POSITION<br>CAVITY WITHOUT A NUMBER INDICATES OPEN TERMINAL POSITION | STATUS | COMMENTS | INTEGRAL COMPONENTS SOLD SEPARATELY<br>DRESS COVER |
|---|---|---|---|---|---|---|---|---|---|---|---|---|---|---|
| MX123 CONN ASSY 73 CKT GRY OPT0 KEY B/35 | 345664163 | C-HSG-B0 | G-CAP-0-P | TPA-B0 | RS | LS | MAL | CPA | MSEAL | RSEAL | - 71 - 69 - 67 - 65 64 63 62 61 - - 58 57 56 - - -<br>- 51 - 49 - 47 - 45 44 43 42 41 - - 38 37 36 - - -<br>- - - - - - - - - 23 22 21 20 19 18 -<br>- 15 14 13 12 11 - 9 - - 6 5 4 3 - - | SALEABLE | | 345650003 |
| MX123 CONN ASSY 73 CKT BLK OPT0 KEY A/42 | 345664173 | C-HSG-A0 | G-CAP-0-P | TPA-A0 | RS | LS | MAL | CPA | MSEAL | RSEAL | - - - - 68 67 66 65 - - 62 61 - - - 57 - - - -<br>- - 50 - 48 - 46 - - - - - 40 39 - 37 - 35 - 33<br>- 31 - 29 - 27 - - 24 23 22 - 20 - - 17<br>- - 14 13 - 11 - - - 7 6 - 4 - 2 1 | SALEABLE | | 345650003 |
| MX123 CONN ASSY 73 CKT BLU OPT0 KEY C/41 | 345664183 | C-HSG-C0 | G-CAP-0-P | TPA-C0 | RS | LS | MAL | CPA | MSEAL | RSEAL | - 71 - 69 - 67 - 65 64 - - 61 60 - - - 56 55 54 -<br>- - 50 49 - - - 45 - 43 - 41 - - 38 37 36 35 - -<br>- 31 - 29 28 27 - - 24 - - - - 19 18 -<br>16 - - - 12 11 - - 8 - - - - 3 2 - | SALEABLE | | 345650003 |
| MX123 CONN ASSY 73 CKT BLU OPT0 KEY C/38 | 345664193 | C-HSG-C0 | G-CAP-0-P | TPA-C0 | RS | LS | MAL | CPA | MSEAL | RSEAL | 72 - 70 - 68 67 66 - - 63 62 - - 59 - 57 - - - 53<br>52 51 - - 48 47 46 - 44 - 42 - 40 39 - - - - 34 33<br>32 - 30 - - 27 26 25 - - 22 21 - - - -<br>- 15 14 - - - 10 9 - - 6 5 4 - - - | SALEABLE | | 345650003 |
| MX123 CONN ASSY 73 CKT GRY OPT0 KEY B/48 | 345664203 | C-HSG-B0 | G-CAP-0-P | TPA-B0 | RS | LS | MAL | CPA | MSEAL | RSEAL | 72 71 70 69 68 67 66 65 - 63 62 61 60 - 58 - 56 - 54 -<br>52 51 - - - 47 - 45 44 43 42 41 40 - 38 - 36 - 34 -<br>- 31 30 - 28 27 26 25 - - 22 - 20 19 - 17<br>16 - 14 13 12 11 10 9 8 - - - - - 2 1 | SALEABLE | | 345650003 |
| MX123 CONN ASSY 73 CKT BLK OPT0 KEY A/36 | 345664213 | C-HSG-A0 | G-CAP-0-P | TPA-A0 | RS | LS | MAL | CPA | MSEAL | RSEAL | - - 70 69 - - - - - 63 62 61 - - - 57 56 55 54 53<br>52 51 - 49 - - - - 44 43 42 41 - - - 37 36 - 34 33<br>32 - - 29 28 27 26 - - 23 - - - 19 18 -<br>16 15 - 13 12 11 10 - 8 - - - - 3 - - | SALEABLE | | 345650003 |
| MX123 CONN ASSY 73 CKT BLK OPT0 KEY A/38 | 345664223 | C-HSG-A0 | G-CAP-0-P | TPA-A0 | RS | LS | MAL | CPA | MSEAL | RSEAL | - - 70 69 - - - - - 63 62 61 - - 58 57 56 55 54 53<br>52 51 - 49 - - - - 44 43 42 41 - - - 37 36 - 34 -<br>32 - - 29 28 27 26 - - - - - - 19 18 -<br>16 15 - 13 12 11 10 - - - - - - 3 - - | SALEABLE | | 345650003 |
| MX123 CONN ASSY 73 CKT GRY OPT0 KEY B/23 | 345664233 | C-HSG-B0 | G-CAP-0-P | TPA-B0 | RS | LS | MAL | CPA | MSEAL | RSEAL | 72 71 70 - 68 67 66 - - - 62 61 60 59 58 57 56 55 54 53<br>52 51 50 - 48 47 46 - - - 42 41 40 39 38 37 36 35 34 33<br>32 31 30 29 28 27 26 25 24 - - - - - - 17<br>16 15 14 13 - - 10 - 8 - - - - - 2 1 | SALEABLE | | 345650003 |
| MX123 CONN ASSY 73 CKT BLK OPT0 KEY A/21 | 345664243 | C-HSG-A0 | G-CAP-0-P | TPA-A0 | RS | LS | MAL | CPA | MSEAL | RSEAL | 72 71 70 69 68 67 66 65 64 63 62 - 60 59 - - - 55 54 53<br>52 - - 49 48 - - 45 44 43 42 41 40 39 - - - 35 34 33<br>32 - - 29 28 27 - 25 24 23 - - - 19 18 17<br>16 - - 13 12 11 - 9 8 7 6 5 4 3 2 1 | SALEABLE | | 345650003 |
| MX123 CONN ASSY 73 CKT BLK OPT0 KEY A/23 | 345664253 | C-HSG-A0 | G-CAP-0-P | TPA-A0 | RS | LS | MAL | CPA | MSEAL | RSEAL | 72 71 70 69 68 67 66 - 64 63 62 - 60 59 - - - 55 54 53<br>52 - - 49 48 - - - 44 43 42 41 40 39 - - - 35 34 33<br>32 - - 29 28 27 - 25 24 23 - - - 19 18 17<br>16 - - 13 12 11 - 9 8 7 6 5 4 3 2 1 | SALEABLE | | 345650003 |
| MX123 CONN ASSY 73 CKT GRY OPT0 KEY B/36 | 345664263 | C-HSG-B0 | G-CAP-0-P | TPA-B0 | RS | LS | MAL | CPA | MSEAL | RSEAL | - - - - - 67 66 - - 63 - - - 59 58 57 56 55 - 53<br>- - 50 49 48 - - 45 - 43 - - - 39 38 37 36 35 34 33<br>- - - 29 - 27 - - - 23 22 21 - - 18 -<br>16 15 14 13 - - - - 8 7 6 5 4 3 - - | SALEABLE | | 345650003 |
| MX123 CONN ASSY 73 CKT GRY OPT0 KEY B/40 | 345664273 | C-HSG-B0 | G-CAP-0-P | TPA-B0 | RS | LS | MAL | CPA | MSEAL | RSEAL | - - - - - - - - - 63 - - - 59 58 57 56 55 - 53<br>- - 50 49 48 - 46 - - 43 - - - 39 38 37 36 35 34 33<br>- - - 29 - 27 - - - 23 22 21 - - 18 -<br>16 15 14 - - - - - - 7 6 5 4 3 - - | SALEABLE | | 345650003 |

molex

# MX123 SEALED RCPT ASSY (73 Ckt)
## BOM & PIN OUT SHEET

| ASSEMBLY DESCRIPTION | ASSEMBLY PART NUMBER | CONNECTOR HOUSING | GROMMET CAP | TPA | RIGHT SLIDE | LEFT SLIDE | MATE ASSIST LEVER | CPA | MAT SEAL | RING SEAL | BLOCKED TERMINALS<br>CAVITY WITH A NUMBER INDICATES BLOCKED TERMINAL POSITION<br>CAVITY WITHOUT A NUMBER INDICATES OPEN TERMINAL POSITION | STATUS | COMMENTS | INTEGRAL COMPONENTS SOLD SEPARATELY<br>DRESS COVER |
|---|---|---|---|---|---|---|---|---|---|---|---|---|---|---|
| MX123 CONN ASSY 73 CKT BLK OPT0 KEY A/38 | 345664283 | C-HSG-A0 | G-CAP-0-P | TPA-A0 | RS | LS | MAL | CPA | MSEAL | RSEAL | 72 71 - - 68 67 66 65 64 - - - - 59 58 - - - - -<br>- - 50 - 48 47 46 45 - - - - 40 39 38 - - 35 - 33<br>- - 31 30 - - - - 25 24 - 22 21 20 - - 17<br>- - - 14 - - - - 9 - 7 6 5 4 - 2 1 | SALEABLE | | 345650003 |
| MX123 CONN ASSY 73 CKT GRY OPT0 KEY B/38 | 345664293 | C-HSG-B0 | G-CAP-0-P | TPA-B0 | RS | LS | MAL | CPA | MSEAL | RSEAL | 72 71 70 69 68 - - 65 64 - 62 61 60 - - - - - 54 -<br>52 51 - - - 47 46 - 44 - 42 41 40 - - - - - - -<br>32 31 30 - 28 - 26 25 24 - - - 20 19 - 17<br>- - - - 12 11 10 9 - - - - - - 2 1 | SALEABLE | | 345650003 |
| MX123 CONN ASSY 73 CKT BLK OPT0 KEY A/33 | 345664303 | C-HSG-A0 | G-CAP-0-P | TPA-A0 | RS | LS | MAL | CPA | MSEAL | RSEAL | 72 71 - - - - 66 - - - 62 - 60 - - - - 55 54 53<br>52 51 - - - - 46 45 44 43 42 - 40 39 - - - 35 - -<br>- - - - - - 26 25 - - 22 21 - - - 17<br>- 15 14 - - - - - 8 7 6 5 4 3 2 - | SALEABLE | | 345650003 |
| MX123 CONN ASSY 73 CKT GRY OPT0 KEY B/35 | 345664313 | C-HSG-B0 | G-CAP-0-P | TPA-B0 | RS | LS | MAL | CPA | MSEAL | RSEAL | 72 71 70 69 68 67 66 65 64 - 62 61 60 - - - - - 54 -<br>52 51 - - - 47 - 45 44 - 42 41 40 - - - - - - -<br>32 31 30 - 28 - 26 25 24 - - - 20 19 - 17<br>- - - - 12 11 10 9 8 - - - - - 2 1 | SALEABLE | | 345650003 |
| MX123 CONN ASSY 73 CKT GRY OPT0 KEY B/37 | 345664323 | C-HSG-B0 | G-CAP-0-P | TPA-B0 | RS | LS | MAL | CPA | MSEAL | RSEAL | - 71 - 69 - 67 - 65 64 63 62 61 - - 58 57 56 - - -<br>- 51 - 49 - 47 - 45 44 43 42 41 - - 38 37 36 - - -<br>- - - - - - - - - 23 22 21 20 - - -<br>- 15 14 13 12 11 - 9 - - 6 5 4 3 - - | SALEABLE | | 345650003 |
| MX123 CONN ASSY 73 CKT BLK OPT0 KEY A/40 | 345664333 | C-HSG-A0 | G-CAP-0-P | TPA-A0 | RS | LS | MAL | CPA | MSEAL | RSEAL | - - - - 68 - 66 65 - - 62 61 - - 58 57 - - - -<br>- - 50 - 48 - 46 - - - - - 40 39 - 37 - 35 - 33<br>- 31 - 29 - 27 - - 24 - 22 21 20 - - 17<br>- - 14 13 - 11 - - 8 7 6 5 4 - 2 1 | SALEABLE | | 345650003 |
| MX123 CONN ASSY 73 CKT BLK OPT0 KEY A/39 | 345664343 | C-HSG-A0 | G-CAP-0-P | TPA-A0 | RS | LS | MAL | CPA | MSEAL | RSEAL | - - - - 68 67 66 65 - - 62 61 - - - 57 - - - -<br>- - 50 - 48 - 46 - - - - - 40 39 - 37 - 35 - 33<br>- 31 - 29 - 27 - - 24 23 22 21 20 - - 17<br>- - 14 13 - 11 - - 8 7 6 5 4 - 2 1 | SALEABLE | | 345650003 |
| MX123 CONN ASSY 73 CKT BLU OPT0 KEY C/37 | 345664353 | C-HSG-C0 | G-CAP-0-P | TPA-C0 | RS | LS | MAL | CPA | MSEAL | RSEAL | - 71 - 69 - 67 66 65 64 - - 61 60 - - - 56 55 54 -<br>- - 50 49 - - 46 45 - 43 - 41 - - 38 37 36 35 - -<br>- 31 - 29 28 27 - - 24 - - - - 19 18 -<br>16 - - - 12 11 10 9 8 - - - - 3 2 - | SALEABLE | | 345650003 |
| MX123 CONN ASSY 73 CKT BLK OPT0 KEY A/39 | 345664363 | C-HSG-A0 | G-CAP-0-P | TPA-A0 | RS | LS | MAL | CPA | MSEAL | RSEAL | 72 71 - - 68 67 66 65 64 - - - - 59 - - - - - -<br>- - 50 - 48 47 46 45 - - - - 40 39 38 - - 35 - 33<br>- 31 30 - - - - 25 24 - 22 21 20 - - 17<br>- - 14 - - - - 9 - 7 6 5 4 - 2 1 | SALEABLE | | 345650003 |
| MX123 CONN ASSY 73 CKT BLK OPT0 KEY A/30 | 345664373 | C-HSG-A0 | G-CAP-0-P | TPA-A0 | RS | LS | MAL | CPA | MSEAL | RSEAL | 72 71 - - 68 67 66 65 64 - 62 61 60 59 - 57 - 55 - 53<br>- - 50 - 48 - 46 45 - - - - - 39 38 37 - 35 - 33<br>- 31 30 29 - 27 - 25 24 23 22 21 20 - - -<br>- 15 14 13 - 11 - 9 8 7 6 5 4 - - - | SALEABLE | | 345650003 |
| MX123 CONN ASSY 73 CKT BLK OPT0 KEY A/29 | 345664403 | C-HSG-A0 | G-CAP-0-P | TPA-A0 | RS | LS | MAL | CPA | MSEAL | RSEAL | - - - - - - - - - - 62 - 60 - - - - 55 54 53<br>52 51 - - - - 46 45 44 43 42 - 40 39 - - - 35 - -<br>- - - - - - 26 25 - - 22 21 - - - 17<br>- 15 14 - - - - - 8 7 - 5 - 3 2 1 | SALEABLE | | 345650003 |
| MX123 CONN ASSY 73 CKT GRY OPT0 KEY B/34 | 345664413 | C-HSG-B0 | G-CAP-0-P | TPA-B0 | RS | LS | MAL | CPA | MSEAL | RSEAL | 72 71 70 69 68 67 66 65 64 - 62 61 60 - - - - - 54 -<br>52 51 - - - 47 - 45 44 - 42 41 40 - - - - - - -<br>32 31 30 - 28 - 26 25 24 - - - 20 19 - 17<br>- - - 13 12 11 10 9 8 - - - - - 2 1 | SALEABLE | | 345650003 |

| ASSEMBLY DESCRIPTION | ASSEMBLY PART NUMBER | CONNECTOR HOUSING | GROMMET CAP | TPA | RIGHT SLIDE | LEFT SLIDE | MATE ASSIST LEVER | CPA | MAT SEAL | RING SEAL | BLOCKED TERMINALS<br>CAVITY WITH A NUMBER INDICATES BLOCKED TERMINAL POSITION<br>CAVITY WITHOUT A NUMBER INDICATES OPEN TERMINAL POSITION | STATUS | COMMENTS | INTEGRAL COMPONENTS SOLD SEPARATELY<br>DRESS COVER |
|---|---|---|---|---|---|---|---|---|---|---|---|---|---|---|
| MX123 CONN ASSY 73 CKT BLU OPT9 KEY C/42 | 345664423 | C-HSG-C9 | G-CAP-9-P | TPA-C9 | RS | LS | MAL | CPA | MSEAL | RSEAL | - 71 - 69 - - - 65 64 - - 61 60 - 58 - 56 55 54 -<br>- - 50 49 - - - 45 - 43 - 41 - - - - - 35 - -<br>- - 31 - 29 28 - - - - 23 - - 20 19 18 17<br>16 - - 13 12 11 - - - 7 - - - 3 - 1 | SALEABLE | | 345650003 |
| MX123 CONN ASSY 73 CKT BLK OPT9 KEY A/40 | 345664433 | C-HSG-A9 | G-CAP-9-P | TPA-A9 | RS | LS | MAL | CPA | MSEAL | RSEAL | 72 71 - - 68 67 66 65 64 - - - - 59 - - - - - -<br>- - - - 48 47 46 45 - - - - 39 38 - - 35 - 33<br>- 31 30 - - - - 25 24 23 22 21 20 - - 17<br>- - - - - - - 9 8 7 6 5 4 - 2 1 | SALEABLE | | 345650003 |
| MX123 CONN ASSY 73 CKT BLK OPT9 KEY A/32 | 345664443 | C-HSG-A9 | G-CAP-9-P | TPA-A9 | RS | LS | MAL | CPA | MSEAL | RSEAL | 72 71 70 69 68 - - 65 64 63 62 61 60 59 58 57 56 55 54 53<br>52 51 50 49 - - 46 45 44 43 42 - 40 39 38 37 36 35 34 33<br>- - - - 28 - - - 24 23 - - 20 - - -<br>- - - - 12 - - - - - - - - - 2 - | SALEABLE | | 345650003 |
| MX123 CONN ASSY 73 CKT BLK OPT0 KEY A/45 | 345664453 | C-HSG-A0 | G-CAP-0-P | TPA-A0 | RS | LS | MAL | CPA | MSEAL | RSEAL | - - - - - 67 66 - - - - - - - - - - - -<br>- - - - - 47 - - - - - 41 - - - - - - - -<br>32 31 30 29 - 27 26 25 - - 22 21 - 19 18 17<br>16 15 14 13 - - 10 9 8 7 6 5 4 3 - - | SALEABLE | | 345650003 |
| MX123 CONN ASSY 73 CKT GRY OPT9 KEY B/18 | 345664463 | C-HSG-B9 | G-CAP-9-P | TPA-B9 | RS | LS | MAL | CPA | MSEAL | RSEAL | 72 71 70 69 68 67 66 65 64 - 62 61 60 59 58 57 56 55 54 -<br>52 51 50 49 - - 46 - 44 - - 41 40 - 38 37 36 - - -<br>32 31 30 29 28 27 - 25 24 - - 21 20 - 18 17<br>16 15 14 13 12 - 10 9 8 7 6 5 4 3 2 - | SALEABLE | | 345650003 |
| MX123 CONN ASSY 73 CKT GRY OPT0 KEY B/21 | 345664473 | C-HSG-B0 | G-CAP-0-P | TPA-B0 | RS | LS | MAL | CPA | MSEAL | RSEAL | 72 71 70 69 68 67 66 65 - - - 61 60 - - 57 56 55 54 -<br>52 51 50 49 48 - 46 - 44 - - 41 40 - 38 37 36 - - -<br>32 31 30 29 28 27 - - 24 - - 21 20 19 18 17<br>16 15 14 13 12 11 10 9 8 7 6 5 4 - 2 - | SALEABLE | | 345650003 |
| MX123 CONN ASSY 73 CKT BLU OPT9 KEY C/54 | 345664483 | C-HSG-C9 | G-CAP-9-P | TPA-C9 | RS | LS | MAL | CPA | MSEAL | RSEAL | - 71 - 69 - - - 65 64 - - 61 60 - - - - - 54 -<br>- - 50 - - - - 45 - 43 42 41 - - - - - 35 - -<br>- 31 - 29 28 - - - - - - - - - - -<br>16 - - - 12 11 - - - - - - - - - - | SALEABLE | | 345650003 |
| MX123 CONN ASSY 73 CKT BLK OPT9 KEY A/58 | 345664493 | C-HSG-A9 | G-CAP-9-P | TPA-A9 | RS | LS | MAL | CPA | MSEAL | RSEAL | - - - - 68 - 66 65 - - - - - - - - - - - -<br>- - - - - - 46 - - - - - - - 38 - - 35 - 33<br>- 31 - - - - - 25 - - 22 - 20 - - -<br>- - - - - - - 9 - 7 6 - 4 - - - | SALEABLE | | 345650003 |
| MX123 CONN ASSY 73 CKT GRY OPT9 KEY B/56 | 345664513 | C-HSG-B9 | G-CAP-9-P | TPA-B9 | RS | LS | MAL | CPA | MSEAL | RSEAL | - - - 69 - - - 65 64 63 - - - - - - - - - -<br>- - - 49 - - - 45 44 43 - - - - - - - - - -<br>- - - - - - - - - - 22 21 20 - - -<br>- - - - 12 11 - 9 - - 6 5 4 - - - | SALEABLE | | 345650003 |
| MX123 CONN ASSY 73 CKT BLK OPT0 KEY A/38 | 345664533 | C-HSG-A0 | G-CAP-0-P | TPA-A0 | RS | LS | MAL | CPA | MSEAL | RSEAL | - 71 70 - 68 - 66 - 64 - 62 61 - 59 58 - - 55 54 -<br>52 51 50 - 48 - 46 45 - - 42 41 - 39 38 - - - 34 -<br>32 - - - - 27 26 25 - 23 22 - - 19 18 -<br>- - - - 12 - - 9 8 7 6 - - - - - | SALEABLE | | 345650003 |
| MX123 CONN ASSY 73 CKT GRY OPT0 KEY B/27 | 345664543 | C-HSG-B0 | G-CAP-0-P | TPA-B0 | RS | LS | MAL | CPA | MSEAL | RSEAL | 72 71 70 69 - - 66 65 - - 62 61 60 59 - - 56 - 54 -<br>52 51 50 49 48 47 - - 44 - 42 41 40 39 - - 36 - 34 33<br>- 31 - - - - 26 25 24 23 - - 20 - 18 -<br>16 15 14 13 - 11 - 9 8 7 6 5 4 3 2 - | SALEABLE | | 345650003 |
| MX123 CONN ASSY 73 CKT GRY OPT0 KEY B/23 | 345664553 | C-HSG-B0 | G-CAP-0-P | TPA-B0 | RS | LS | MAL | CPA | MSEAL | RSEAL | 72 71 70 69 - - 66 65 - - 62 61 60 59 - - 56 55 54 -<br>52 51 50 49 48 47 - - 44 - 42 41 40 39 - - 36 35 34 33<br>- 31 - - - - 26 25 24 23 - - 20 19 18 -<br>16 15 14 13 - 11 - 9 8 7 6 5 4 3 2 1 | SALEABLE | | 345650003 |

| ASSEMBLY DESCRIPTION | ASSEMBLY PART NUMBER | CONNECTOR HOUSING | GROMMET CAP | TPA | RIGHT SLIDE | LEFT SLIDE | MATE ASSIST LEVER | CPA | MAT SEAL | RING SEAL | BLOCKED TERMINALS<br>CAVITY WITH A NUMBER INDICATES BLOCKED TERMINAL POSITION<br>CAVITY WITHOUT A NUMBER INDICATES OPEN TERMINAL POSITION | STATUS | COMMENTS | INTEGRAL COMPONENTS SOLD SEPARATELY<br>DRESS COVER |
|---|---|---|---|---|---|---|---|---|---|---|---|---|---|---|
| MX123 CONN ASSY 73 CKT GRY OPT0 KEY B/24 | 345664563 | C-HSG-B0 | G-CAP-0-P | TPA-B0 | RS | LS | MAL | CPA | MSEAL | RSEAL | 72 71 70 69 - - 66 65 - - 62 61 60 59 - 57 56 - 54 -<br>52 51 50 49 48 47 - - 44 - 42 41 40 39 - 37 36 - 34 33<br>- - 31 - - - - 26 25 24 23 - 21 20 - 18 -<br>16 15 14 13 - 11 - 9 8 7 6 5 4 3 2 - | SALEABLE | | 345650003 |
| MX123 CONN ASSY 73 CKT GRY OPT0 KEY B/20 | 345664573 | C-HSG-B0 | G-CAP-0-P | TPA-B0 | RS | LS | MAL | CPA | MSEAL | RSEAL | 72 71 70 69 - - 66 65 - - 62 61 60 59 - 57 56 55 54 -<br>52 51 50 49 48 47 - - 44 - 42 41 40 39 - 37 36 35 34 33<br>- - 31 - - - - 26 25 24 23 - 21 20 19 18 -<br>16 15 14 13 - 11 - 9 8 7 6 5 4 3 2 1 | SALEABLE | | 345650003 |
| MX123 CONN ASSY 73 CKT GRY OPT0 KEY B/19 | 345664583 | C-HSG-B0 | G-CAP-0-P | TPA-B0 | RS | LS | MAL | CPA | MSEAL | RSEAL | 72 71 70 69 - - 66 65 - 63 62 61 60 59 - 57 56 55 54 -<br>52 51 50 49 48 47 - - 44 43 42 41 40 39 - 37 36 35 34 33<br>- - 31 - - - - 26 25 24 23 - 21 20 19 18 -<br>16 15 14 13 - 11 - 9 8 7 6 5 4 3 2 - | SALEABLE | | 345650003 |
| MX123 CONN ASSY 73 CKT GRY OPT0 KEY B/18 | 345664593 | C-HSG-B0 | G-CAP-0-P | TPA-B0 | RS | LS | MAL | CPA | MSEAL | RSEAL | 72 71 70 69 - - 66 65 - 63 62 61 60 59 - 57 56 55 54 -<br>52 51 50 49 48 47 - - 44 43 42 41 40 39 - 37 36 35 34 33<br>- - 31 - - - - 26 25 24 23 - 21 20 19 18 -<br>16 15 14 13 - 11 - 9 8 7 6 5 4 3 2 1 | SALEABLE | | 345650003 |
| MX123 CONN ASSY 73 CKT BLK OPT0 KEY A/42 | 345664613 | C-HSG-A0 | G-CAP-0-P | TPA-A0 | RS | LS | MAL | CPA | MSEAL | RSEAL | - 71 70 - 68 - - - 64 - 62 61 - 59 58 - - 55 54 -<br>52 51 50 - 48 - 46 45 - - - 41 - 39 38 - - - 34 -<br>32 - - - - - - 25 - 23 22 - - 19 18 -<br>- - - - 12 - - 9 8 7 6 - - - - - | SALEABLE | | 345650003 |
| MX123 CONN ASSY 73 CKT GRY OPT0 KEY B/36 | 345664623 | C-HSG-B0 | G-CAP-0-P | TPA-B0 | RS | LS | MAL | CPA | MSEAL | RSEAL | - 71 - 69 - 67 - 65 64 63 62 61 - - 58 57 56 - - -<br>- 51 - 49 - 47 - 45 44 43 42 41 - - 38 37 36 - - -<br>- - - - - - - - - - 22 21 20 19 18 -<br>- 15 14 13 12 11 - 9 - - 6 5 4 3 - - | SALEABLE | | 345650003 |
| MX123 CONN ASSY 73 CKT BLK OPT0 KEY A/39 | 345664633 | C-HSG-A0 | G-CAP-0-P | TPA-A0 | RS | LS | MAL | CPA | MSEAL | RSEAL | 72 - - - 68 67 66 65 - - 62 61 - - - 57 - - - -<br>- - 50 - 48 - 46 - - - - - 40 39 - 37 - 35 - 33<br>- 31 - 29 - 27 - 25 24 23 22 - 20 - - 17<br>- - 14 13 - 11 - 9 - 7 6 - 4 - 2 1 | SALEABLE | | 345650003 |
| MX123 CONN ASSY 73 CKT GRY OPT0 KEY B/38 | 345664643 | C-HSG-B0 | G-CAP-0-P | TPA-B0 | RS | LS | MAL | CPA | MSEAL | RSEAL | - 71 - 69 - 67 - 65 64 63 62 61 - - 58 57 56 - - -<br>- 51 - 49 - 47 - 45 44 43 42 41 - - 38 37 36 - - -<br>- - - - - - - - - - 22 21 20 - - -<br>- 15 14 13 12 11 - 9 - - 6 5 4 3 - - | SALEABLE | | 345650003 |
| MX123 CONN ASSY 73 CKT BLK OPT0 KEY A/37 | 345664653 | C-HSG-A0 | G-CAP-0-P | TPA-A0 | RS | LS | MAL | CPA | MSEAL | RSEAL | 72 - - - 68 - 66 65 - - 62 61 - - 58 57 - - - -<br>- - 50 - 48 - 46 - - - - - 40 39 - 37 - 35 - 33<br>- 31 - 29 - 27 - 25 24 - 22 21 20 - - 17<br>- - 14 13 - 11 - 9 8 7 6 5 4 - 2 1 | SALEABLE | | 345650003 |
| MX123 CONN ASSY 73 CKT BLK OPT0 KEY A/36 | 345664663 | C-HSG-A0 | G-CAP-0-P | TPA-A0 | RS | LS | MAL | CPA | MSEAL | RSEAL | 72 - - - 68 67 66 65 - - 62 61 - - - 57 - - - -<br>- - 50 - 48 - 46 - - - - - 40 39 - 37 - 35 - 33<br>- 31 - 29 - 27 - 25 24 23 22 21 20 - - 17<br>- - 14 13 - 11 - 9 8 7 6 5 4 - 2 1 | SALEABLE | | 345650003 |
| MX123 CONN ASSY 73 CKT BLK OPT0 KEY A/29 | 345664673 | C-HSG-A0 | G-CAP-0-P | TPA-A0 | RS | LS | MAL | CPA | MSEAL | RSEAL | 72 71 70 69 68 - - 65 64 63 62 61 60 59 58 57 56 55 54 53<br>52 51 50 49 48 - 46 45 44 43 42 - 40 39 38 37 36 35 34 33<br>- - - - 28 - - - 24 23 - - 20 - - -<br>- - - - 12 11 - - - - - - - - 2 1 | SALEABLE | | 345650003 |
| MX123 CONN ASSY 73 CKT GRY OPT9 KEY B/56 | 345664683 | C-HSG-B9 | G-CAP-9-P | TPA-B9 | RS | LS | MAL | CPA | MSEAL | RSEAL | - - - - - - - - - 63 - - - - - - - - - 53<br>- - - - 48 47 - 45 - 43 42 - - 39 - - - 35 34 33<br>- - - - - - 26 - - 23 22 - - 19 - -<br>- - - - - 11 - - - - - - - - - 1 | SALEABLE | | 345650003 |

molex

MX123 SEALED RCPT ASSY (73 Ckt)
BOM & PIN OUT SHEET

| ASSEMBLY DESCRIPTION | ASSEMBLY PART NUMBER | CONNECTOR HOUSING | GROMMET CAP | TPA | RIGHT SLIDE | LEFT SLIDE | MATE ASSIST LEVER | CPA | MAT SEAL | RING SEAL | BLOCKED TERMINALS<br>CAVITY WITH A NUMBER INDICATES BLOCKED TERMINAL POSITION<br>CAVITY WITHOUT A NUMBER INDICATES OPEN TERMINAL POSITION | STATUS | COMMENTS | INTEGRAL COMPONENTS SOLD SEPARATELY<br>DRESS COVER |
|---|---|---|---|---|---|---|---|---|---|---|---|---|---|---|
| MX123 CONN ASSY 73 CKT GRY OPT0 KEY B/53 | 345664693 | C-HSG-B0 | G-CAP-0-P | TPA-B0 | RS | LS | MAL | CPA | MSEAL | RSEAL | - - - - - - - - 64 63 62 - - 59 58 - - - - 53<br>- - - - - 47 - 45 - 43 42 - - 39 - - - 35 34 33<br>- - - - - - - - - - 26 25 - 23 22 - - - - -<br>- - - - - - - - - - - - - - - - - 3 - 1 | SALEABLE | | 345650003 |
| MX123 CONN ASSY 73 CKT GRY OPT0 KEY B/48 | 345664703 | C-HSG-B0 | G-CAP-0-P | TPA-B0 | RS | LS | MAL | CPA | MSEAL | RSEAL | 72 71 70 69 68 - - - - 63 62 61 60 - - - 56 - 54 -<br>52 51 50 - - - 46 45 - 43 42 41 40 - - - 36 - 34 -<br>- - - - 32 31 30 - 28 27 26 25 24 - - - 20 19 18 17<br>- - - - 16 15 14 13 - 11 10 - 8 - 6 5 4 3 2 1 | SALEABLE | | 345650003 |
| MX123 CONN ASSY 73 CKT BLK OPT0 KEY A/37 | 345664713 | C-HSG-A0 | G-CAP-0-P | TPA-A0 | RS | LS | MAL | CPA | MSEAL | RSEAL | - - - - 68 - 66 65 - - 62 61 - - 58 57 - - - -<br>- - 50 - 48 - 46 - - - - - 40 39 38 37 - 35 - 33<br>- - - - - 31 - 29 - 27 - 25 24 - 22 21 20 - - 17<br>- - - - - - 14 13 - 11 - 9 8 7 6 5 4 - 2 1 | SALEABLE | | 345650003 |
| MX123 CONN ASSY 73 CKT BLK OPT0 KEY A/36 | 345664723 | C-HSG-A0 | G-CAP-0-P | TPA-A0 | RS | LS | MAL | CPA | MSEAL | RSEAL | - - - - 68 67 66 65 - - 62 61 - - - 57 - - - -<br>- - 50 - 48 - 46 - - - - - 40 39 38 37 - 35 - 33<br>- - - - - 31 - 29 - 27 - 25 24 23 22 21 20 - - 17<br>- - - - - - 14 13 - 11 - 9 8 7 6 5 4 - 2 1 | SALEABLE | | 345650003 |
| MX123 CONN ASSY 73 CKT BLK OPT0 KEY A/39 | 345664733 | C-HSG-A0 | G-CAP-0-P | TPA-A0 | RS | LS | MAL | CPA | MSEAL | RSEAL | - - - - 68 67 66 65 - - 62 61 - - - 57 - - - -<br>- - 50 - 48 - 46 - - - - - 40 39 38 37 - 35 - 33<br>- - - - - 31 - 29 - 27 - 25 24 23 22 - 20 - - 17<br>- - - - - - 14 13 - 11 - 9 - 7 6 - 4 - 2 1 | SALEABLE | | 345650003 |
| MX123 CONN ASSY 73 CKT BLK OPT9 KEY A/59 | 345664743 | C-HSG-A9 | G-CAP-9-P | TPA-A9 | RS | LS | MAL | CPA | MSEAL | RSEAL | - - - - 68 - 66 - - - - - - - - - - - -<br>- - - - - - 46 - - - - - - - 38 - - 35 - 33<br>- - - - - 31 - - - - - 25 - - 22 - 20 - - -<br>- - - - - - - - - - - 9 - 7 6 - 4 - - - | SALEABLE | | 345650003 |
| MX123 CONN ASSY 73 CKT GRY OPT0 KEY B/20 | 345664753 | C-HSG-B0 | G-CAP-0-P | TPA-B0 | RS | LS | MAL | CPA | MSEAL | RSEAL | 72 71 70 69 - - 66 65 - 63 62 61 60 59 - 57 56 55 54 53<br>52 51 50 49 48 47 - - 44 43 42 41 40 39 - 37 36 35 34 33<br>- - - - - 31 - - - - 26 25 24 23 - 21 20 19 18 -<br>- - - - 16 - 14 - 12 11 - 9 8 7 - 5 4 3 2 - | SALEABLE | | 345650003 |
| MX123 CONN ASSY 73 CKT GRY OPT0 KEY B/16 | 345664763 | C-HSG-B0 | G-CAP-0-P | TPA-B0 | RS | LS | MAL | CPA | MSEAL | RSEAL | 72 71 70 69 - - 66 65 - 63 62 61 60 59 58 57 56 55 54 53<br>52 51 50 49 48 47 - - 44 43 42 41 40 39 38 37 36 35 34 33<br>- - - - - 31 - - - - 26 25 24 23 22 21 20 19 18 -<br>- - - - 16 - 14 - 12 11 - 9 8 7 - 5 4 3 2 1 | SALEABLE | | 345650003 |
| MX123 CONN ASSY 73 CKT GRY OPT0 KEY B/25 | 345664773 | C-HSG-B0 | G-CAP-0-P | TPA-B0 | RS | LS | MAL | CPA | MSEAL | RSEAL | 72 71 70 69 - - 66 65 - 63 62 61 60 - - 57 56 55 - 53<br>52 51 50 49 48 47 - - 44 43 42 41 40 - - 37 36 35 34 33<br>- - - - - 31 - - - - 26 25 24 - - 21 20 19 18 -<br>- - - - 16 - 14 - 12 11 - 9 - 7 - 5 4 3 2 - | SALEABLE | | 345650003 |
| MX123 CONN ASSY 73 CKT GRY OPT0 KEY B/25 | 345664783 | C-HSG-B0 | G-CAP-0-P | TPA-B0 | RS | LS | MAL | CPA | MSEAL | RSEAL | 72 71 70 69 - - 66 65 - - 62 61 60 59 - 57 56 - 54 53<br>52 51 50 49 48 47 - - 44 - 42 41 40 39 - 37 36 - 34 33<br>- - - - - 31 - - - - 26 25 24 23 - 21 20 - 18 -<br>- - - - 16 - 14 - 12 11 - 9 8 7 - 5 4 3 2 - | SALEABLE | | 345650003 |
| MX123 CONN ASSY 73 CKT GRY OPT0 KEY B/21 | 345664793 | C-HSG-B0 | G-CAP-0-P | TPA-B0 | RS | LS | MAL | CPA | MSEAL | RSEAL | 72 71 70 69 - - 66 65 - - 62 61 60 59 - 57 56 55 54 53<br>52 51 50 49 48 47 - - 44 - 42 41 40 39 - 37 36 35 34 33<br>- - - - - 31 - - - - 26 25 24 23 - 21 20 19 18 -<br>- - - - 16 - 14 - 12 11 - 9 8 7 - 5 4 3 2 1 | SALEABLE | | 345650003 |
| MX123 CONN ASSY 73 CKT BLK OPT0 KEY A/38 | 345664803 | C-HSG-A0 | G-CAP-0-P | TPA-A0 | RS | LS | MAL | CPA | MSEAL | RSEAL | - - 70 - - - - 65 - - - - 60 - 58 57 56 55 54 -<br>52 51 50 49 - 47 46 45 - 43 - - 40 - 38 37 36 - 34 -<br>- - - - - 31 30 - 28 - 26 - 24 - 22 21 20 19 18 -<br>- - - - 16 15 14 - - - 10 - - 7 6 - - - - - | SALEABLE | | 345650003 |

| ASSEMBLY DESCRIPTION | ASSEMBLY PART NUMBER | CONNECTOR HOUSING | GROMMET CAP | TPA | RIGHT SLIDE | LEFT SLIDE | MATE ASSIST LEVER | CPA | MAT SEAL | RING SEAL | BLOCKED TERMINALS<br>CAVITY WITH A NUMBER INDICATES BLOCKED TERMINAL POSITION<br>CAVITY WITHOUT A NUMBER INDICATES OPEN TERMINAL POSITION | STATUS | COMMENTS | INTEGRAL COMPONENTS SOLD SEPARATELY<br>DRESS COVER |
|---|---|---|---|---|---|---|---|---|---|---|---|---|---|---|
| MX123 CONN ASSY 73 CKT GRY OPT9 KEY B/26 | 345664813 | C-HSG-B9 | G-CAP-9-P | TPA-B9 | RS | LS | MAL | CPA | MSEAL | RSEAL | 72 71 70 69 - - 66 65 - 63 62 61 60 - - 57 56 55 - 53<br>52 51 50 49 48 47 - - 44 43 42 41 40 - - 37 36 35 34 33<br>- - 31 - - - - 26 25 24 - - 21 20 19 18 -<br>16 - 14 - 12 11 - - - 7 - 5 4 3 2 - | SALEABLE | | 345650003 |
| MX123 CONN ASSY 73 CKT BLU OPT0 KEY C/46 | 345664823 | C-HSG-C0 | G-CAP-0-P | TPA-C0 | RS | LS | MAL | CPA | MSEAL | RSEAL | 72 71 70 69 - - - - - 63 62 61 60 - - - 56 - - -<br>52 - - - - 47 - - 44 - - - - - - 36 - 34 -<br>- - - 29 28 27 - 25 - - - 21 - 19 18 17<br>- 15 14 - 12 11 - - - - - - - - - 1 | SALEABLE | | 345650003 |
| MX123 CONN ASSY 73 CKT BLU OPT0 KEY C/41 | 345664833 | C-HSG-C0 | G-CAP-0-P | TPA-C0 | RS | LS | MAL | CPA | MSEAL | RSEAL | - 71 - 69 - - - 65 64 - - 61 60 - 58 - 56 55 54 -<br>- - 50 49 - - - 45 - 43 - 41 - - 38 - - 35 - -<br>- 31 - 29 28 - - - - 23 - - 20 19 18 17<br>16 - - 13 12 11 - - - 7 - - - 3 - 1 | SALEABLE | | 345650003 |
| MX123 CONN ASSY 73 CKT BLU OPT0 KEY C/42 | 345664843 | C-HSG-C0 | G-CAP-0-P | TPA-C0 | RS | LS | MAL | CPA | MSEAL | RSEAL | - 71 - 69 - - - 65 64 - - 61 60 - 58 - 56 55 54 -<br>- - 50 49 - - - 45 - 43 - 41 - - - - - 35 - -<br>- 31 - 29 28 - - - - 23 - - 20 19 18 17<br>16 - - 13 12 11 - - - 7 - - - 3 - 1 | SALEABLE | | 345650003 |
| MX123 CONN ASSY 73 CKT BLU OPT0 KEY C/45 | 345664853 | C-HSG-C0 | G-CAP-0-P | TPA-C0 | RS | LS | MAL | CPA | MSEAL | RSEAL | - 71 - 69 - 67 - 65 64 - - 61 60 - 58 - - - 54 -<br>- - 50 49 - - - 45 - 43 - 41 - - 38 - - 35 - -<br>- 31 - 29 28 - - - - 23 - - 20 - - 17<br>16 - - 13 12 11 - - - 7 - - - - - 1 | SALEABLE | | 345650003 |
| MX123 CONN ASSY 73 CKT BLU OPT0 KEY C/41 | 345664863 | C-HSG-C0 | G-CAP-0-P | TPA-C0 | RS | LS | MAL | CPA | MSEAL | RSEAL | - 71 - 69 - 67 - 65 64 - - 61 60 - 58 - 56 55 54 -<br>- - 50 49 - - - 45 - 43 - 41 - - - - - 35 - -<br>- 31 - 29 28 - - - - 23 - - 20 19 18 17<br>16 - - 13 12 11 - - - 7 - - - 3 - 1 | SALEABLE | | 345650003 |
| MX123 CONN ASSY 73 CKT BLU OPT0 KEY C/40 | 345664873 | C-HSG-C0 | G-CAP-0-P | TPA-C0 | RS | LS | MAL | CPA | MSEAL | RSEAL | - 71 - 69 - 67 - 65 64 - - 61 60 - 58 - 56 55 54 -<br>- - 50 49 - - - 45 - 43 - 41 - - 38 - - 35 - -<br>- 31 - 29 28 - - - - 23 - - 20 19 18 17<br>16 - - 13 12 11 - - - 7 - - - 3 - 1 | SALEABLE | | 345650003 |
| MX123 CONN ASSY 73 CKT BLK OPT9 KEY A/39 | 345664883 | C-HSG-A9 | G-CAP-9-P | TPA-A9 | RS | LS | MAL | CPA | MSEAL | RSEAL | - 71 70 - 68 - 66 - 64 - 62 61 - 59 58 - - 55 54 -<br>52 51 50 - 48 - - 45 - - 42 41 - 39 38 - - - 34 -<br>32 - - - - 27 26 25 - 23 22 - - 19 18 -<br>- - - - 12 - - 9 8 7 6 - - - - - | SALEABLE | | 345650003 |
| MX123 CONN ASSY 73 CKT GRY OPT9 KEY B/24 | 345664893 | C-HSG-B9 | G-CAP-9-P | TPA-B9 | RS | LS | MAL | CPA | MSEAL | RSEAL | 72 71 70 69 - - 66 65 - - 62 61 60 59 - 57 56 - 54 53<br>52 51 50 49 48 47 - - 44 - 42 41 40 39 - 37 36 - 34 33<br>- 31 - - - - 26 25 24 23 - 21 20 - 18 -<br>16 - 14 - 12 11 - 9 8 7 6 5 4 3 2 - | SALEABLE | | 345650003 |
| MX123 CONN ASSY 73 CKT BLK OPT0 KEY A/21 | 345664903 | C-HSG-A0 | G-CAP-0-P | TPA-A0 | RS | LS | MAL | CPA | MSEAL | RSEAL | - - - - - 67 - - - - - - 60 - - - - - 54 53<br>- - - - 48 - 46 45 - - 42 - 40 39 - - - - - -<br>- - - - - - 26 25 - - 22 21 - - - -<br>- - - - - - - - 8 7 6 5 4 3 - - | SALEABLE | | 345650003 |
| MX123 CONN ASSY 73 CKT GRY OPT9 KEY B/27 | 345664913 | C-HSG-B9 | G-CAP-9-P | TPA-B9 | RS | LS | MAL | CPA | MSEAL | RSEAL | 72 71 70 69 - - 66 65 - - 62 61 60 59 - - 56 - 54 -<br>52 51 50 49 48 47 - - 44 - 42 41 40 39 - - 36 - 34 33<br>- 31 - - - - 26 25 24 23 - - 20 - 18 -<br>16 15 14 13 - 11 - 9 8 7 6 5 4 3 2 - | SALEABLE | | 345650003 |
| MX123 CONN ASSY 73 CKT BLK OPT9 KEY A/38 | 345664923 | C-HSG-A9 | G-CAP-9-P | TPA-A9 | RS | LS | MAL | CPA | MSEAL | RSEAL | - 71 70 - 68 - 66 - 64 - 62 61 - 59 58 - - 55 54 -<br>52 51 50 - 48 - 46 45 - - 42 41 - 39 38 - - - 34 -<br>32 - - - - 27 26 25 - 23 22 - - 19 18 -<br>- - - - 12 - - 9 8 7 6 - - - - - | SALEABLE | | 345650003 |

| ASSEMBLY DESCRIPTION | ASSEMBLY PART NUMBER | CONNECTOR HOUSING | GROMMET CAP | TPA | RIGHT SLIDE | LEFT SLIDE | MATE ASSIST LEVER | CPA | MAT SEAL | RING SEAL | BLOCKED TERMINALS<br>CAVITY WITH A NUMBER INDICATES BLOCKED TERMINAL POSITION<br>CAVITY WITHOUT A NUMBER INDICATES OPEN TERMINAL POSITION | STATUS | COMMENTS | INTEGRAL COMPONENTS SOLD SEPARATELY<br>DRESS COVER |
|---|---|---|---|---|---|---|---|---|---|---|---|---|---|---|
| MX123 CONN ASSY 73 CKT BLU OPT0 KEY C/41 | 345664933 | C-HSG-C0 | G-CAP-0-P | TPA-C0 | RS | LS | MAL | CPA | MSEAL | RSEAL | - 71 - 69 - - - 65 64 - - 61 60 - 58 - 56 55 54 -<br>- - 50 49 - - - 45 - 43 42 41 - - 38 - - - - -<br>- - 31 - 29 28 - - - - 23 - - 20 19 18 17<br>- 16 - - 13 12 11 - - - 7 - - - 3 - 1 | SALEABLE | | 345650003 |
| MX123 CONN ASSY 73 CKT BLK OPT0 KEY A/49 | 345664943 | C-HSG-A0 | G-CAP-0-P | TPA-A0 | RS | LS | MAL | CPA | MSEAL | RSEAL | 72 71 - - - - 66 65 64 - - - - - - - - - - -<br>- - - - 48 47 46 45 - - - - 40 - - - - 35 - 33<br>- - - 30 - - - - - 24 - 22 21 20 - - 17<br>- - - - - - - - - - 7 6 5 4 - 2 1 | SALEABLE | | 345650003 |
| MX123 CONN ASSY 73 CKT GRY OPT0 KEY B/51 | 345664953 | C-HSG-B0 | G-CAP-0-P | TPA-B0 | RS | LS | MAL | CPA | MSEAL | RSEAL | - - - - - - - - - - 62 61 60 - 58 57 56 55 54 -<br>- - - - - - - - - - 42 41 40 - 38 37 36 35 - -<br>- - - - - - - - - - - 22 21 20 - - -<br>- - - - - - - - 9 - - 6 5 4 - - - | SALEABLE | | 345650003 |
| MX123 CONN ASSY 73 CKT BLK OPT9 KEY A/43 | 345664963 | C-HSG-A9 | G-CAP-9-P | TPA-A9 | RS | LS | MAL | CPA | MSEAL | RSEAL | - 71 70 - 68 - - - 64 - 62 61 - 59 58 - - 55 54 -<br>52 51 50 - 48 - - 45 - - - 41 - 39 38 - - - 34 -<br>- 32 - - - - - - 25 - 23 22 - - 19 18 -<br>- - - - 12 - - 9 8 7 6 - - - - - | SALEABLE | | 345650003 |
| MX123 CONN ASSY 73 CKT GRY OPT9 KEY B/27 | 345664973 | C-HSG-B9 | G-CAP-9-P | TPA-B9 | RS | LS | MAL | CPA | MSEAL | RSEAL | 72 71 70 69 - - 66 65 - 63 62 61 60 - - 57 56 55 - 53<br>52 51 50 49 48 47 - - - - 42 41 40 - - 37 36 35 34 33<br>- 31 - - - - 26 25 24 - - 21 20 19 18 -<br>16 - 14 - - 11 - 9 8 7 - 5 4 3 2 - | SALEABLE | | 345650003 |
| MX123 CONN ASSY 73 CKT GRY OPT0 KEY B/39 | 345664983 | C-HSG-B0 | G-CAP-0-P | TPA-B0 | RS | LS | MAL | CPA | MSEAL | RSEAL | - 71 - 69 - 67 - 65 64 63 62 61 - - 58 57 56 - - -<br>- 51 - 49 - 47 - 45 - 43 42 41 - - 38 37 36 - - -<br>- - - - - - - - - - 22 21 20 - - -<br>- 15 14 13 12 11 - 9 - - 6 5 4 3 - - | SALEABLE | | 345650003 |
| MX123 CONN ASSY 73 CKT BLK OPT0 KEY A/36 | 345664993 | C-HSG-A0 | G-CAP-0-P | TPA-A0 | RS | LS | MAL | CPA | MSEAL | RSEAL | - - - - 68 - 66 65 - - 62 61 - - 58 57 - - - -<br>- - 50 - 48 - 46 - - - - - 40 39 38 37 - 35 - 33<br>- 31 - 29 - 27 - 25 24 23 22 21 20 - - 17<br>- - 14 13 - 11 - 9 8 7 6 5 4 - 2 1 | SALEABLE | | 345650003 |
| MX123 CONN ASSY 73 CKT GRY OPT9 KEY B/31 | 345665013 | C-HSG-B9 | G-CAP-9-P | TPA-B9 | RS | LS | MAL | CPA | MSEAL | RSEAL | 72 71 70 69 - - 66 65 - - 62 61 60 - - 57 56 - - 53<br>52 51 50 49 48 47 - - - - 42 41 40 - - 37 36 - 34 33<br>- 31 - - - - 26 25 24 - - 21 20 - 18 -<br>16 - 14 - - 11 - 9 8 7 - 5 4 3 2 - | SALEABLE | | 345650003 |
| MX123 CONN ASSY 73 CKT BLU OPT0 KEY C/38 | 345665023 | C-HSG-C0 | G-CAP-0-P | TPA-C0 | RS | LS | MAL | CPA | MSEAL | RSEAL | - 71 - 69 - - 66 65 64 - - 61 60 - 58 - 56 55 54 -<br>- - 50 49 - - - 45 - 43 - 41 - - 38 - - 35 - -<br>- 31 - 29 28 27 - - - 23 - - - 19 18 17<br>16 - - 13 12 11 10 9 - 7 - - - 3 - 1 | SALEABLE | | 345650003 |
| MX123 CONN ASSY 73 CKT BLK OPT0 KEY A/40 | 345665033 | C-HSG-A0 | G-CAP-0-P | TPA-A0 | RS | LS | MAL | CPA | MSEAL | RSEAL | 72 71 - - 68 67 66 65 64 - - - - 59 - - - - - -<br>- - 50 - 48 47 46 45 - - - - 40 39 38 - - - - -<br>- 31 30 - - - - - 24 23 22 21 20 - - 17<br>- - 14 - - - - 9 8 7 6 5 4 - 2 1 | SALEABLE | | 345650003 |
| MX123 CONN ASSY 73 CKT BLK OPT0 KEY A/2 | 345665043 | C-HSG-A0 | G-CAP-0-P | TPA-A0 | RS | LS | MAL | CPA | MSEAL | RSEAL | 72 71 70 69 68 67 66 65 64 63 62 61 60 59 58 57 56 55 54 53<br>52 51 50 49 48 47 46 45 44 43 42 41 40 39 38 37 36 35 34 33<br>- 32 - 30 29 28 27 26 25 24 23 22 21 20 19 18 17<br>16 15 14 13 12 11 10 9 8 7 6 5 4 3 2 1 | SALEABLE | | 345650003 |
| MX123 CONN ASSY 73 CKT GRY OPT0 KEY B/6 | 345665053 | C-HSG-B0 | G-CAP-0-P | TPA-B0 | RS | LS | MAL | CPA | MSEAL | RSEAL | 72 71 70 69 68 67 66 65 64 63 62 61 60 59 58 57 56 55 54 53<br>52 51 50 49 48 - 46 45 44 43 42 41 40 39 38 37 36 35 34 33<br>- 32 - 30 29 28 27 26 25 24 23 22 21 - 19 18 -<br>16 15 14 13 12 11 10 9 8 7 6 5 4 3 2 - | SALEABLE | | 345650003 |

molex

# MX123 SEALED RCPT ASSY (73 Ckt)
## BOM & PIN OUT SHEET

| ASSEMBLY DESCRIPTION | ASSEMBLY PART NUMBER | CONNECTOR HOUSING | GROMMET CAP | TPA | RIGHT SLIDE | LEFT SLIDE | MATE ASSIST LEVER | CPA | MAT SEAL | RING SEAL | BLOCKED TERMINALS<br>CAVITY WITH A NUMBER INDICATES BLOCKED TERMINAL POSITION<br>CAVITY WITHOUT A NUMBER INDICATES OPEN TERMINAL POSITION | STATUS | COMMENTS | INTEGRAL COMPONENTS SOLD SEPARATELY<br>DRESS COVER |
|---|---|---|---|---|---|---|---|---|---|---|---|---|---|---|
| MX123 CONN ASSY 73 CKT BLK OPT9 KEY A/62 | 345665073 | C-HSG-A9 | G-CAP-9-P | TPA-A9 | RS | LS | MAL | CPA | MSEAL | RSEAL | - - - - - - - - - - - - - - - - - - - - - - -<br>- - - - - - - - - - - - - - - - - - 35 - -<br>- - - - - - - - - - - - 25 - - - - - - - 17<br>- - 15 14 - - - - - - 7 6 5 4 3 2 - | SALEABLE | | 345650003 |
| MX123 CONN ASSY 73 CKT BLK OPT9 KEY A/39 | 345665083 | C-HSG-A9 | G-CAP-9-P | TPA-A9 | RS | LS | MAL | CPA | MSEAL | RSEAL | 72 71 - - 68 67 66 65 64 - - - - 59 - - - - - -<br>- - 50 - 48 47 46 45 - - - - 40 39 - - 36 35 - 33<br>- 31 30 - - - - 25 24 - 22 21 20 - - 17<br>- - 14 - - - - 9 - 7 6 5 4 - 2 1 | SALEABLE | | 345650003 |
| MX123 CONN ASSY 73 CKT GRY OPT0 KEY B/57 | 345665093 | C-HSG-B0 | G-CAP-0-P | TPA-B0 | RS | LS | MAL | CPA | MSEAL | RSEAL | - - - - - - - - - - - - - - - - - - - - - - -<br>- - - - - - - - - - - - - - - - - - - - - - -<br>32 31 30 - 28 - 26 25 24 - - - 20 19 - 17<br>- - - - 12 11 10 9 - - - - - - 2 1 | SALEABLE | | 345650003 |
| MX123 CONN ASSY 73 CKT GRY OPT0 KEY B/52 | 345665103 | C-HSG-B0 | G-CAP-0-P | TPA-B0 | RS | LS | MAL | CPA | MSEAL | RSEAL | 72 71 70 69 68 - - - 64 63 62 61 60 - 58 - 56 - 54 -<br>52 51 50 - - - - 45 - 43 42 41 40 - 38 - 36 - 34 -<br>32 31 30 - - 27 26 25 24 - 22 - 20 19 18 17<br>16 15 14 13 12 11 10 9 8 - 6 5 4 3 2 1 | SALEABLE | | 345650003 |
| MX123 CONN ASSY 73 CKT BLK OPT0 KEY A/50 | 345665113 | C-HSG-A0 | G-CAP-0-P | TPA-A0 | RS | LS | MAL | CPA | MSEAL | RSEAL | - - - - - - - 65 - - - 61 - - 58 57 56 - - -<br>- 51 50 - - 47 46 45 - - - - - - 38 37 36 - - -<br>- 31 30 - 28 - 26 - - - 22 21 20 - - -<br>- 15 14 - - - 10 - - - - - - - - - | SALEABLE | | 345650003 |
| MX123 CONN ASSY 73 CKT BLU OPT9 KEY C/43 | 345665123 | C-HSG-C9 | G-CAP-9-P | TPA-C9 | RS | LS | MAL | CPA | MSEAL | RSEAL | - 71 - 69 - - - 65 64 - - 61 60 - 58 - 56 55 54 -<br>- - 50 49 - - - - - 43 42 41 - - - - - 35 - -<br>- 31 - 29 28 - - - - 23 - - - 19 18 17<br>16 - - 13 12 11 - - - 7 - - - 3 - 1 | SALEABLE | | 345650003 |
| MX123 CONN ASSY 73 CKT GRY OPT9 KEY B/50 | 345665133 | C-HSG-B9 | G-CAP-9-P | TPA-B9 | RS | LS | MAL | CPA | MSEAL | RSEAL | - - - 69 - - - 65 64 63 - - - - - - - - - -<br>- - - 49 - - - 45 44 43 - - - - - - - - - -<br>- - - - - - - - - - 22 21 20 19 18 17<br>- - - - 12 11 - - - 7 6 5 4 3 2 1 | SALEABLE | | 345650003 |
| MX123 CONN ASSY 73 CKT BLU OPT0 KEY C/41 | 345665143 | C-HSG-C0 | G-CAP-0-P | TPA-C0 | RS | LS | MAL | CPA | MSEAL | RSEAL | - 71 - 69 - - - 65 64 - - 61 60 - 58 - 56 55 54 -<br>- - 50 49 - - - 45 - 43 - 41 - - 38 - - 35 - -<br>- 31 - 29 28 27 - - - 23 - - - 19 18 17<br>16 - - 13 12 11 - - - 7 - - - 3 - 1 | SALEABLE | | 345650003 |
| MX123 CONN ASSY 73 CKT BLK OPT0 KEY A/41 | 345665153 | C-HSG-A0 | G-CAP-0-P | TPA-A0 | RS | LS | MAL | CPA | MSEAL | RSEAL | 72 71 - - 68 67 66 65 64 - - - - 59 - - - - - -<br>- - 50 - 48 - 46 45 - - - - 40 39 38 - - - - -<br>- 31 30 - - - - - 24 23 22 21 20 - - 17<br>- - 14 - - - - 9 8 7 6 5 4 - 2 1 | SALEABLE | | 345650003 |
| MX123 CONN ASSY 73 CKT BLK OPT9 KEY A/37 | 345665163 | C-HSG-A9 | G-CAP-9-P | TPA-A9 | RS | LS | MAL | CPA | MSEAL | RSEAL | - 71 70 - 68 - 66 - 64 - 62 61 - 59 58 - - 55 54 -<br>52 51 50 - 48 - 46 45 - - 42 41 - 39 38 - - - 34 -<br>32 - - - - 27 26 25 - 23 22 - - 19 18 -<br>- - - 13 12 - - 9 8 7 6 - - - - - | SALEABLE | | 345650003 |
| MX123 CONN ASSY 73 CKT GRY OPT9 KEY B/23 | 345665173 | C-HSG-B9 | G-CAP-9-P | TPA-B9 | RS | LS | MAL | CPA | MSEAL | RSEAL | 72 71 70 69 - - 66 65 - - 62 61 60 - 58 - 56 55 54 53<br>52 51 50 49 48 47 - - 44 - 42 41 40 - 38 - 36 35 34 33<br>- 31 - - - - 26 25 24 23 22 - 20 19 18 17<br>16 15 14 13 12 11 - 9 8 7 - - - - 2 1 | SALEABLE | | 345650003 |
| MX123 CONN ASSY 73 CKT GRY OPT0 KEY B/24 | 345665183 | C-HSG-B0 | G-CAP-0-P | TPA-B0 | RS | LS | MAL | CPA | MSEAL | RSEAL | 72 71 70 69 - - 66 65 - 63 62 61 60 - - 57 56 55 - 53<br>52 51 50 49 48 47 - - - 43 42 41 40 - - 37 36 35 34 33<br>- 31 - - - - 26 25 24 - - 21 20 19 18 -<br>16 15 14 13 - 11 - 9 - 7 6 5 4 3 2 - | SALEABLE | | 345650003 |

| ASSEMBLY DESCRIPTION | ASSEMBLY PART NUMBER | CONNECTOR HOUSING | GROMMET CAP | TPA | RIGHT SLIDE | LEFT SLIDE | MATE ASSIST LEVER | CPA | MAT SEAL | RING SEAL | BLOCKED TERMINALS<br>CAVITY WITH A NUMBER INDICATES BLOCKED TERMINAL POSITION<br>CAVITY WITHOUT A NUMBER INDICATES OPEN TERMINAL POSITION | STATUS | COMMENTS | INTEGRAL COMPONENTS SOLD SEPARATELY<br>DRESS COVER |
|---|---|---|---|---|---|---|---|---|---|---|---|---|---|---|
| MX123 CONN ASSY 73 CKT BLK OPT0 KEY A/40 | 345665193 | C-HSG-A0 | G-CAP-0-P | TPA-A0 | RS | LS | MAL | CPA | MSEAL | RSEAL | 72 71 - - 68 67 66 65 64 - - - - 59 - - - - - -<br>- - 50 - 48 47 46 45 - - - - 40 39 38 - - 35 - 33<br>- - 31 30 - - - - 25 24 23 22 21 20 - - -<br>- - 14 - - - - 9 8 7 6 5 4 - - - | SALEABLE | | 345650003 |
| MX123 CONN ASSY 73 CKT BLK OPT0 KEY A/15 | 345665203 | C-HSG-A0 | G-CAP-0-P | TPA-A0 | RS | LS | MAL | CPA | MSEAL | RSEAL | - - 70 - - - - 65 - - - 61 60 - - - - 55 - -<br>- - - - - - - 45 - - - 41 40 - - - - - - -<br>- - - - 28 - 26 25 - - - - - - 18 -<br>16 - - - - - 10 - - - - - - - - - | SALEABLE | | 345650003 |
| MX123 CONN ASSY 73 CKT BLK OPT0 KEY A/51 | 345665213 | C-HSG-A0 | G-CAP-0-P | TPA-A0 | RS | LS | MAL | CPA | MSEAL | RSEAL | - - - - - - - - - - - 61 - - 58 57 56 - - -<br>- 51 50 - - 47 46 45 - - - - - - 38 37 36 - - -<br>- - 31 30 - 28 - 26 - - - 22 21 20 - - -<br>- 15 14 - - - 10 - - - - - - - - - | SALEABLE | | 345650003 |
| MX123 CONN ASSY 73 CKT BLU OPT0 KEY C/34 | 345665223 | C-HSG-C0 | G-CAP-0-P | TPA-C0 | RS | LS | MAL | CPA | MSEAL | RSEAL | - 71 - 69 68 - - 65 64 - - 61 60 - 58 - 56 55 54 -<br>- - 50 49 - 47 - 45 - 43 - 41 - - 38 37 36 35 - -<br>- 31 - 29 28 - - - 24 23 - - 20 19 18 17<br>16 - - 13 12 11 - - 8 7 - - - 3 2 1 | SALEABLE | | 345650003 |
| MX123 CONN ASSY 73 CKT BLU OPT0 KEY C/41 | 345665233 | C-HSG-C0 | G-CAP-0-P | TPA-C0 | RS | LS | MAL | CPA | MSEAL | RSEAL | - 71 - 69 - - - 65 64 - - 61 60 - 58 - - - 54 -<br>- - 50 49 - - - 45 - 43 - 41 - - - 37 36 35 - -<br>- 31 - 29 28 27 - - 24 23 - - 20 - - 17<br>16 - - 13 12 11 - - 8 7 - - - - 2 1 | SALEABLE | | 345650003 |
| MX123 CONN ASSY 73 CKT BLU OPT0 KEY C/60 | 345665243 | C-HSG-C0 | G-CAP-0-P | TPA-C0 | RS | LS | MAL | CPA | MSEAL | RSEAL | - - - - - - - - 64 - - - 60 - - - - - - -<br>52 - - - - 47 - - - - - - - - - - 37 - - - -<br>32 - - - - - - - 24 23 - - - - - -<br>- - - 13 12 11 10 - 8 - - - - - - - | SALEABLE | | 345650003 |
| MX123 CONN ASSY 73 CKT GRY OPT0 KEY B/39 | 345665253 | C-HSG-B0 | G-CAP-0-P | TPA-B0 | RS | LS | MAL | CPA | MSEAL | RSEAL | 72 71 70 69 68 - - 65 64 - 62 61 60 - - - - - 54 -<br>52 51 - - - 47 - - 44 - 42 41 40 - - - - - - -<br>32 31 30 - 28 - 26 25 24 - - - 20 19 - 17<br>- - - - 12 11 10 9 - - - - - - 2 1 | SALEABLE | | 345650003 |
| MX123 CONN ASSY 73 CKT GRY OPT0 KEY B/50 | 345665263 | C-HSG-B0 | G-CAP-0-P | TPA-B0 | RS | LS | MAL | CPA | MSEAL | RSEAL | - - - 69 - - - 65 64 63 - - - - - - - - - -<br>- - - 49 - - - 45 44 43 - - - - - - - - - -<br>- - - - - - 26 - - 23 22 21 20 19 18 -<br>- - - - 12 11 - 9 - 7 6 5 4 3 - - | SALEABLE | | 345650003 |
| MX123 CONN ASSY 73 CKT BLK OPT0 KEY A/40 | 345665273 | C-HSG-A0 | G-CAP-0-P | TPA-A0 | RS | LS | MAL | CPA | MSEAL | RSEAL | 72 71 - - 68 67 66 65 64 - - - - 59 - - - - - -<br>- - 50 - 48 47 46 45 - - - - 40 39 38 - - 35 - 33<br>- 31 30 - - - - 25 24 - 22 21 20 - - 17<br>- - 14 - - - - - - 7 6 5 4 - 2 1 | SALEABLE | | 345650003 |
| MX123 CONN ASSY 73 CKT BLU OPT0 KEY C/41 | 345665283 | C-HSG-C0 | G-CAP-0-P | TPA-C0 | RS | LS | MAL | CPA | MSEAL | RSEAL | - 71 - 69 - - - 65 64 - - 61 60 - 58 - - - - -<br>- - 50 49 - - - 45 - 43 - 41 - - 38 37 36 35 - -<br>- 31 - 29 28 27 - - 24 23 - - 20 - - 17<br>16 - - 13 12 11 - - 8 7 - - - - 2 1 | SALEABLE | | 345650003 |
| MX123 CONN ASSY 73 CKT BLK OPT0 KEY A/41 | 345665293 | C-HSG-A0 | G-CAP-0-P | TPA-A0 | RS | LS | MAL | CPA | MSEAL | RSEAL | 72 71 - - 68 67 66 65 64 - - - - - 59 - - - - - -<br>- - 50 - 48 47 46 45 - - - - - 39 38 - - 35 - 33<br>- 31 30 - - - - 25 24 23 22 21 20 - - -<br>- - 14 - - - - 9 8 7 6 5 4 - - - | SALEABLE | | 345650003 |
| MX123 CONN ASSY 73 CKT GRY OPT0 KEY B/49 | 345665303 | C-HSG-B0 | G-CAP-0-P | TPA-B0 | RS | LS | MAL | CPA | MSEAL | RSEAL | 72 71 70 69 68 67 66 - - 63 62 61 60 - 58 - 56 - 54 -<br>52 51 - - - 47 - 45 44 43 42 41 40 - 38 - 36 - 34 -<br>- 31 30 - 28 27 26 25 24 - 22 - 20 19 18 17<br>16 - 14 13 12 11 10 9 8 - - - - - 2 1 | SALEABLE | | 345650003 |

| ASSEMBLY DESCRIPTION | ASSEMBLY PART NUMBER | CONNECTOR HOUSING | GROMMET CAP | TPA | RIGHT SLIDE | LEFT SLIDE | MATE ASSIST LEVER | CPA | MAT SEAL | RING SEAL | BLOCKED TERMINALS<br>CAVITY WITH A NUMBER INDICATES BLOCKED TERMINAL POSITION<br>CAVITY WITHOUT A NUMBER INDICATES OPEN TERMINAL POSITION | STATUS | COMMENTS | INTEGRAL COMPONENTS SOLD SEPARATELY<br>DRESS COVER |
|---|---|---|---|---|---|---|---|---|---|---|---|---|---|---|
| MX123 CONN ASSY 73 CKT BLU OPT0 KEY C/47 | 345665313 | C-HSG-C0 | G-CAP-0-P | TPA-C0 | RS | LS | MAL | CPA | MSEAL | RSEAL | - 71 - 69 - - - 65 64 - - 61 60 - 58 - - - 54 -<br>- - 50 49 - - - 45 - 43 - 41 - - - - - 35 - -<br>- - 31 - 29 28 - - - - 23 - - 20 - - 17<br>16 - - 13 12 11 - - - 7 - - - - - 1 | SALEABLE | | 345650003 |
| MX123 CONN ASSY 73 CKT BLK OPT0 KEY A/35 | 345665333 | C-HSG-A0 | G-CAP-0-P | TPA-A0 | RS | LS | MAL | CPA | MSEAL | RSEAL | - - - 69 - - - - - - - 61 - - 58 57 - 55 54 -<br>52 - 50 - - - - - - - 42 - - 39 38 37 36 35 34 33<br>32 31 - - - 27 - - - 23 22 21 - 19 18 -<br>16 15 14 13 - - 10 9 8 7 6 5 4 3 2 1 | SALEABLE | | 345650003 |
| MX123 CONN ASSY 73 CKT GRY OPT0 KEY B/24 | 345665343 | C-HSG-B0 | G-CAP-0-P | TPA-B0 | RS | LS | MAL | CPA | MSEAL | RSEAL | 72 71 70 69 - - 66 65 - 63 62 61 60 - - 57 56 55 - 53<br>52 51 50 49 48 47 - - 44 43 42 41 40 - - 37 36 35 34 33<br>- 31 - - - - 26 25 24 - - 21 20 19 18 -<br>16 15 14 13 - 11 - 9 - 7 - 5 4 3 2 - | SALEABLE | | 345650003 |
| MX123 CONN ASSY 73 CKT GRY OPT9 KEY B/32 | 345665353 | C-HSG-B9 | G-CAP-9-P | TPA-B9 | RS | LS | MAL | CPA | MSEAL | RSEAL | 72 71 70 69 - - 66 65 - - 62 61 60 - - 57 56 - - 53<br>52 51 50 49 48 47 - - - - 42 41 40 - - 37 36 - - 33<br>- 31 - - - - 26 25 24 - - 21 20 - 18 -<br>16 - 14 - - 11 - 9 8 7 - 5 4 3 2 - | SALEABLE | | 345650003 |
| MX123 CONN ASSY 73 CKT BLU OPT0 KEY C/35 | 345665363 | C-HSG-C0 | G-CAP-0-P | TPA-C0 | RS | LS | MAL | CPA | MSEAL | RSEAL | - 71 - 69 - 67 - 65 64 - - 61 60 - 58 - 56 55 54 -<br>- - 50 49 - - - 45 - 43 - 41 - - - 37 36 35 - -<br>- 31 - 29 28 27 - - 24 23 - - 20 19 18 17<br>16 - - 13 12 11 - - 8 7 - - - 3 2 1 | SALEABLE | | 345650003 |
| MX123 CONN ASSY 73 CKT BLU OPT0 KEY C/32 | 345665373 | C-HSG-C0 | G-CAP-0-P | TPA-C0 | RS | LS | MAL | CPA | MSEAL | RSEAL | - 71 - 69 - 67 - 65 64 - - 61 60 - 58 - 56 55 54 -<br>- - 50 49 - - - 45 - 43 - 41 - - 38 37 36 35 - -<br>- 31 - 29 28 27 - - 24 23 - - 20 19 18 17<br>16 - - 13 12 11 - - 8 7 - 5 4 3 2 1 | SALEABLE | | 345650003 |
| MX123 CONN ASSY 73 CKT BLU OPT0 KEY C/39 | 345665383 | C-HSG-C0 | G-CAP-0-P | TPA-C0 | RS | LS | MAL | CPA | MSEAL | RSEAL | - 71 - 69 - 67 - 65 64 - - 61 60 - 58 - 56 55 54 -<br>- - 50 49 - - - 45 - 43 - 41 - - 38 - - 35 - -<br>- 31 - 29 28 27 - - - 23 - - 20 19 18 17<br>16 - - 13 12 11 - - - 7 - - - 3 - 1 | SALEABLE | | 345650003 |
| MX123 CONN ASSY 73 CKT BLK OPT0 KEY A/30 | 345665393 | C-HSG-A0 | G-CAP-0-P | TPA-A0 | RS | LS | MAL | CPA | MSEAL | RSEAL | 72 71 - - 68 67 66 65 64 - 62 61 60 59 58 57 - - - -<br>- - 50 - 48 47 46 45 - - - - 40 39 38 37 - 35 - 33<br>- 31 30 29 - 27 - 25 24 - 22 - 20 - - 17<br>- 15 14 13 - 11 - 9 - 7 6 - 4 - 2 1 | SALEABLE | | 345650003 |
| MX123 CONN ASSY 73 CKT GRY OPT0 KEY B/42 | 345665403 | C-HSG-B0 | G-CAP-0-P | TPA-B0 | RS | LS | MAL | CPA | MSEAL | RSEAL | 72 71 70 69 68 67 66 - 64 63 62 61 60 - - - - - 54 -<br>52 51 - - - 47 - - 44 43 42 41 40 - - - 36 - - -<br>32 31 30 - 28 27 26 25 24 - - - 20 19 - 17<br>- - - 13 12 11 10 9 8 - - - - - 2 1 | SALEABLE | | 345650003 |
| MX123 CONN ASSY 73 CKT BLK OPT0 KEY A/31 | 345665413 | C-HSG-A0 | G-CAP-0-P | TPA-A0 | RS | LS | MAL | CPA | MSEAL | RSEAL | 72 71 - - 68 67 66 65 64 - 62 61 60 59 58 57 - - - -<br>- - 50 - 48 47 46 45 - - - - 40 39 38 37 - 35 - 33<br>- 31 30 29 - 27 - 25 24 - 22 - 20 - - 17<br>- - 14 13 - 11 - 9 - 7 6 - 4 - 2 1 | SALEABLE | | 345650003 |
| MX123 CONN ASSY 73 CKT BLK OPT0 KEY A/27 | 345665423 | C-HSG-A0 | G-CAP-0-P | TPA-A0 | RS | LS | MAL | CPA | MSEAL | RSEAL | 72 71 - - 68 67 66 65 64 - 62 61 60 59 - 57 - - - -<br>- - 50 - 48 47 46 45 - - - - 40 39 38 37 - 35 - 33<br>- 31 30 29 - 27 - 25 24 23 22 21 20 - - 17<br>- 15 14 13 - 11 - 9 8 7 6 5 4 - 2 1 | SALEABLE | | 345650003 |
| MX123 CONN ASSY 73 CKT GRY OPT9 KEY B/22 | 345665433 | C-HSG-B9 | G-CAP-9-P | TPA-B9 | RS | LS | MAL | CPA | MSEAL | RSEAL | 72 71 70 69 - - 66 65 - 63 62 61 60 - - 57 56 55 - 53<br>52 51 50 49 48 47 - - 44 43 42 41 40 - - 37 36 35 34 33<br>- 31 - - - - 26 25 24 - - 21 20 19 18 -<br>16 15 14 13 12 11 - 9 8 7 - 5 4 3 2 - | SALEABLE | | 345650003 |

| ASSEMBLY DESCRIPTION | ASSEMBLY PART NUMBER | CONNECTOR HOUSING | GROMMET CAP | TPA | RIGHT SLIDE | LEFT SLIDE | MATE ASSIST LEVER | CPA | MAT SEAL | RING SEAL | BLOCKED TERMINALS<br>CAVITY WITH A NUMBER INDICATES BLOCKED TERMINAL POSITION<br>CAVITY WITHOUT A NUMBER INDICATES OPEN TERMINAL POSITION | STATUS | COMMENTS | INTEGRAL COMPONENTS SOLD SEPARATELY<br>DRESS COVER |
|---|---|---|---|---|---|---|---|---|---|---|---|---|---|---|
| MX123 CONN ASSY 73 CKT GRY OPT9 KEY B/24 | 345665443 | C-HSG-B9 | G-CAP-9-P | TPA-B9 | RS | LS | MAL | CPA | MSEAL | RSEAL | 72 71 70 69 - - 66 65 - 63 62 61 60 - - 57 56 55 - 53<br>52 51 50 49 48 47 - - 44 43 42 41 40 - - 37 36 35 34 33<br>- - 31 - - - - 26 25 24 - - 21 20 19 18 -<br>16 - 14 - 12 11 - 9 8 7 - 5 4 3 2 - | SALEABLE | | 345650003 |
| MX123 CONN ASSY 73 CKT GRY OPT0 KEY B/24 | 345665453 | C-HSG-B0 | G-CAP-0-P | TPA-B0 | RS | LS | MAL | CPA | MSEAL | RSEAL | 72 71 70 69 - - 66 65 - 63 62 61 60 - - 57 56 55 - 53<br>52 51 50 49 48 47 - - 44 43 42 41 40 - - 37 36 35 34 33<br>- 31 - - - - 26 25 24 - - 21 20 19 18 -<br>16 - 14 - 12 11 - 9 8 7 - 5 4 3 2 - | SALEABLE | | 345650003 |
| MX123 CONN ASSY 73 CKT BLK OPT0 KEY A/21 | 345665463 | C-HSG-A0 | G-CAP-0-P | TPA-A0 | RS | LS | MAL | CPA | MSEAL | RSEAL | - 71 - 69 68 67 66 65 64 - 62 61 60 59 58 57 56 55 54 53<br>- 51 50 - 48 47 46 45 44 43 42 - 40 39 38 37 36 35 34 33<br>32 - - 29 - - - 25 24 - 22 21 - - 18 17<br>- - - 13 - 11 - 9 8 7 - 5 4 3 2 1 | SALEABLE | | 345650003 |
| MX123 CONN ASSY 73 CKT BLK OPT0 KEY A/45 | 345665473 | C-HSG-A0 | G-CAP-0-P | TPA-A0 | RS | LS | MAL | CPA | MSEAL | RSEAL | - - - 69 - - - - - - - 61 - - 58 57 - 55 54 -<br>- - 50 49 - - - - - - - - - 39 38 37 36 35 34 33<br>32 - - - - - - - - - 22 21 - - 18 -<br>- - - 13 - - - 9 8 7 - 5 4 3 2 1 | SALEABLE | | 345650003 |
| MX123 CONN ASSY 73 CKT GRY OPT0 KEY B/39 | 345665483 | C-HSG-B0 | G-CAP-0-P | TPA-B0 | RS | LS | MAL | CPA | MSEAL | RSEAL | - 71 - 69 - 67 - 65 - - 62 61 - - 58 57 56 - - -<br>- 51 - 49 - 47 - 45 44 43 42 41 - - 38 37 36 - - -<br>- - - - - - - - - 23 22 21 - 19 18 -<br>- 15 14 13 12 11 - 9 - 7 6 - - 3 - - | SALEABLE | | 345650003 |
| MX123 CONN ASSY 73 CKT BLK OPT0 KEY A/37 | 345665493 | C-HSG-A0 | G-CAP-0-P | TPA-A0 | RS | LS | MAL | CPA | MSEAL | RSEAL | - 71 - - 68 67 66 65 64 - 62 61 - - - - - - - -<br>- - 50 - 48 47 46 45 - - - - - 39 38 - - 35 - 33<br>- 31 30 29 - 27 - 25 24 23 22 21 20 - - -<br>- - 14 13 - 11 - 9 8 7 6 5 4 - - - | SALEABLE | | 345650003 |
| MX123 CONN ASSY 73 CKT BLK OPT0 KEY A/30 | 345665503 | C-HSG-A0 | G-CAP-0-P | TPA-A0 | RS | LS | MAL | CPA | MSEAL | RSEAL | - - 70 - - - - 65 - - - 61 - - 58 57 56 55 54 53<br>- 51 50 - - 47 - 45 - - - 41 - - 38 37 36 - 34 -<br>- 31 30 - 28 - - 25 - - 22 21 20 19 18 -<br>16 15 - - - - - - - - - - - - - - | SALEABLE | | 345650003 |
| MX123 CONN ASSY 73 CKT GRY OPT9 KEY B/22 | 345665513 | C-HSG-B9 | G-CAP-9-P | TPA-B9 | RS | LS | MAL | CPA | MSEAL | RSEAL | 72 71 70 69 - - 66 65 - - 62 61 60 59 - 57 56 - 54 53<br>52 51 50 49 48 47 - - 44 - 42 41 40 39 - 37 36 - 34 33<br>- 31 - - - - 26 25 24 23 - 21 20 - 18 -<br>16 15 14 13 12 11 - 9 8 7 6 5 4 3 2 - | SALEABLE | | 345650003 |
| MX123 CONN ASSY 73 CKT BLK OPT9 KEY A/42 | 345665523 | C-HSG-A9 | G-CAP-9-P | TPA-A9 | RS | LS | MAL | CPA | MSEAL | RSEAL | - 71 70 - 68 - - - 64 - 62 61 - 59 58 - - 55 54 -<br>52 51 50 - 48 - 46 45 - - - 41 - 39 38 - - - 34 -<br>32 - - - - - - 25 - 23 22 - - 19 18 -<br>- - - - 12 - - 9 8 7 6 - - - - - | SALEABLE | | 345650003 |
| MX123 CONN ASSY 73 CKT GRY OPT9 KEY B/24 | 345665533 | C-HSG-B9 | G-CAP-9-P | TPA-B9 | RS | LS | MAL | CPA | MSEAL | RSEAL | 72 71 70 69 - - 66 65 - 63 62 61 60 - - 57 56 55 - 53<br>52 51 50 49 48 47 - - 44 43 42 41 40 - - 37 36 35 34 33<br>- 31 - - - - 26 25 24 - - 21 20 19 18 -<br>16 15 14 13 12 11 - - - 7 - 5 4 3 2 - | SALEABLE | | 345650003 |
| MX123 CONN ASSY 73 CKT BLK OPT9 KEY A/24 | 345665543 | C-HSG-A9 | G-CAP-9-P | TPA-A9 | RS | LS | MAL | CPA | MSEAL | RSEAL | 72 71 70 69 - - 66 65 - 63 62 61 60 - - 57 56 55 - 53<br>52 51 50 49 48 47 - - 44 43 42 41 40 - - 37 36 35 34 33<br>- 31 - - - - 26 25 24 - - 21 20 19 18 -<br>16 15 14 13 - 11 - 9 - 7 - 5 4 3 2 - | SALEABLE | | 345650003 |
| MX123 CONN ASSY 73 CKT GRY OPT9 KEY B/24 | 345665553 | C-HSG-B9 | G-CAP-9-P | TPA-B9 | RS | LS | MAL | CPA | MSEAL | RSEAL | 72 71 70 69 - - 66 65 - 63 62 61 60 - - 57 56 55 - 53<br>52 51 50 49 48 47 - - 44 43 42 41 40 - - 37 36 35 34 33<br>- 31 - - - - 26 25 24 - - 21 20 19 18 -<br>16 15 14 13 - 11 - 9 - 7 - 5 4 3 2 - | SALEABLE | | 345650003 |

| ASSEMBLY DESCRIPTION | ASSEMBLY PART NUMBER | CONNECTOR HOUSING | GROMMET CAP | TPA | RIGHT SLIDE | LEFT SLIDE | MATE ASSIST LEVER | CPA | MAT SEAL | RING SEAL | BLOCKED TERMINALS<br>CAVITY WITH A NUMBER INDICATES BLOCKED TERMINAL POSITION<br>CAVITY WITHOUT A NUMBER INDICATES OPEN TERMINAL POSITION | STATUS | COMMENTS | INTEGRAL COMPONENTS SOLD SEPARATELY<br>DRESS COVER |
|---|---|---|---|---|---|---|---|---|---|---|---|---|---|---|
| MX123 CONN ASSY 73 CKT BLK OPT0 KEY A/43 | 345665563 | C-HSG-A0 | G-CAP-0-P | TPA-A0 | RS | LS | MAL | CPA | MSEAL | RSEAL | - - - - 68 67 66 65 - - 62 61 - - - - - - - -<br>- - 50 - - - 46 - - - - - 40 39 38 - - 35 - -<br>- - 31 - 29 - 27 - 25 24 23 22 21 20 - - -<br>- - - 14 13 - 11 - 9 8 7 6 5 4 - - - | SALEABLE | | 345650003 |
| MX123 CONN ASSY 73 CKT BLU OPT0 KEY C/52 | 345665573 | C-HSG-C0 | G-CAP-0-P | TPA-C0 | RS | LS | MAL | CPA | MSEAL | RSEAL | - 71 - 69 - 67 - 65 64 - - 61 60 - - - - - 54 -<br>- - 50 - - - - 45 - 43 - 41 - - - - - 35 - -<br>- 31 - 29 28 27 - - - - - - - - - - -<br>16 - - - 12 11 - - - - - - - - 3 - - | SALEABLE | | 345650003 |
| MX123 CONN ASSY 73 CKT GRY OPT0 KEY B/41 | 345665583 | C-HSG-B0 | G-CAP-0-P | TPA-B0 | RS | LS | MAL | CPA | MSEAL | RSEAL | - 71 - 69 - 67 - 65 - - 62 61 - - 58 57 56 - - -<br>- 51 - 49 - 47 - 45 44 43 42 41 - - 38 37 36 - - -<br>- - - - - - - - - - 22 21 - 19 18 -<br>- 15 14 13 12 11 - 9 - - 6 - - 3 - - | SALEABLE | | 345650003 |
| MX123 CONN ASSY 73 CKT BLU OPT0 KEY C/37 | 345665593 | C-HSG-C0 | G-CAP-0-P | TPA-C0 | RS | LS | MAL | CPA | MSEAL | RSEAL | - 71 - 69 - 67 - 65 64 - - 61 60 - 58 - 56 - 54 -<br>- - 50 49 - - - 45 - 43 - 41 - - 38 37 36 35 - -<br>- 31 - 29 28 27 - - 24 - - - 20 19 18 17<br>16 - - 13 12 11 - - 8 - - - - 3 2 1 | SALEABLE | | 345650003 |
| MX123 CONN ASSY 73 CKT BLK OPT0 KEY A/33 | 345665603 | C-HSG-A0 | G-CAP-0-P | TPA-A0 | RS | LS | MAL | CPA | MSEAL | RSEAL | - - 70 - - - - 65 - - - 61 60 - 58 57 - 55 54 -<br>52 51 - 49 - 47 - 45 - - - 41 40 - 38 37 - - 34 -<br>- 31 - - 28 - 26 25 24 - 22 21 - 19 18 -<br>16 15 - - - - 10 - - 7 6 - - - - - | SALEABLE | | 345650003 |
| MX123 CONN ASSY 73 CKT BLU OPT0 KEY C/43 | 345665613 | C-HSG-C0 | G-CAP-0-P | TPA-C0 | RS | LS | MAL | CPA | MSEAL | RSEAL | - 71 - 69 - 67 66 65 64 - - 61 60 - - - 56 55 54 -<br>- - 50 49 - - 46 45 - 43 - 41 - - 38 - - 35 - -<br>- 31 - 29 28 - - - - - - - - - 19 18 -<br>16 - - - 12 11 10 9 - - - - - 3 - - | SALEABLE | | 345650003 |
| MX123 CONN ASSY 73 CKT BLU OPT0 KEY C/40 | 345665623 | C-HSG-C0 | G-CAP-0-P | TPA-C0 | RS | LS | MAL | CPA | MSEAL | RSEAL | - 71 - 69 - 67 66 65 64 - - 61 60 - 58 - 56 55 54 -<br>- - 50 49 - - 46 45 - 43 - 41 - - 38 - - 35 - -<br>- 31 - 29 28 - - - - - - - - - 19 18 17<br>16 - - - 12 11 10 9 - - - - - 3 - 1 | SALEABLE | | 345650003 |
| MX123 CONN ASSY 73 CKT GRY OPT0 KEY B/19 | 345665633 | C-HSG-B0 | G-CAP-0-P | TPA-B0 | RS | LS | MAL | CPA | MSEAL | RSEAL | - 71 70 69 68 67 66 65 64 63 - - 60 59 58 57 56 55 54 53<br>- 51 50 49 - 47 - 45 - - 42 - - 39 38 37 36 35 34 33<br>32 31 - 29 28 27 26 25 24 23 22 21 - - - 17<br>- - - 13 12 11 10 9 8 7 6 5 - 3 2 1 | SALEABLE | | 345650003 |
| MX123 CONN ASSY 73 CKT GRY OPT0 KEY B/18 | 345665643 | C-HSG-B0 | G-CAP-0-P | TPA-B0 | RS | LS | MAL | CPA | MSEAL | RSEAL | - 71 70 69 68 67 66 65 64 63 - - 60 59 58 57 56 55 54 53<br>- 51 50 49 - 47 - 45 44 - 42 - - 39 38 37 36 35 34 33<br>32 31 - 29 28 27 26 25 24 23 22 21 - - - 17<br>- - - 13 12 11 10 9 8 7 6 5 - 3 2 1 | SALEABLE | | 345650003 |
| MX123 CONN ASSY 73 CKT BLK OPT0 KEY A/52 | 345665653 | C-HSG-A0 | G-CAP-0-P | TPA-A0 | RS | LS | MAL | CPA | MSEAL | RSEAL | - - - - - 67 - - - - 62 - - 59 58 - - 55 - -<br>- - - - - 47 - - - - 42 41 - - - - - 35 - -<br>- - - - - 27 - - 24 - - - 20 19 18 -<br>16 - - - - 11 10 - 8 - - - 4 3 - 1 | SALEABLE | | 345650003 |
| MX123 CONN ASSY 73 CKT BLU OPT0 KEY C/37 | 345665663 | C-HSG-C0 | G-CAP-0-P | TPA-C0 | RS | LS | MAL | CPA | MSEAL | RSEAL | 72 71 70 - 68 - - 65 - 63 - 61 - 59 58 - 56 - - 53<br>- - - 49 - 47 - - - 43 - 41 40 39 38 - 36 - - -<br>- - 30 29 - - - 25 24 23 22 21 20 - - 17<br>- - - - - - - - 8 7 6 5 4 3 2 1 | SALEABLE | | 345650003 |
| MX123 CONN ASSY 73 CKT BLU OPT0 KEY C/35 | 345665673 | C-HSG-C0 | G-CAP-0-P | TPA-C0 | RS | LS | MAL | CPA | MSEAL | RSEAL | 72 71 70 - 68 - - 65 - 63 62 - - 59 58 - 56 55 - 53<br>- - - - - 47 - - - 43 42 - 40 39 38 - 36 35 - -<br>- - 30 29 - - 26 - 24 23 22 21 20 19 - 17<br>- - - - - - - - 8 7 6 5 4 3 2 1 | SALEABLE | | 345650003 |

| ASSEMBLY DESCRIPTION | ASSEMBLY PART NUMBER | CONNECTOR HOUSING | GROMMET CAP | TPA | RIGHT SLIDE | LEFT SLIDE | MATE ASSIST LEVER | CPA | MAT SEAL | RING SEAL | BLOCKED TERMINALS<br>CAVITY WITH A NUMBER INDICATES BLOCKED TERMINAL POSITION<br>CAVITY WITHOUT A NUMBER INDICATES OPEN TERMINAL POSITION | STATUS | COMMENTS | INTEGRAL COMPONENTS SOLD SEPARATELY<br>DRESS COVER |
|---|---|---|---|---|---|---|---|---|---|---|---|---|---|---|
| MX123 CONN ASSY 73 CKT GRY OPT0 KEY B/18 | 345665683 | C-HSG-B0 | G-CAP-0-P | TPA-B0 | RS | LS | MAL | CPA | MSEAL | RSEAL | - 71 70 69 68 67 66 65 64 63 - - 60 59 58 57 56 55 54 53<br>- 51 50 49 - 47 - 45 - - 42 - - 39 38 37 36 35 34 33<br>- 32 31 - 29 28 27 26 25 24 23 22 21 - - - 17<br>- 15 - 13 12 11 10 9 8 7 6 5 - 3 2 1 | SALEABLE | | 345650003 |
| MX123 CONN ASSY 73 CKT BLK OPT0 KEY A/53 | 345665693 | C-HSG-A0 | G-CAP-0-P | TPA-A0 | RS | LS | MAL | CPA | MSEAL | RSEAL | - - - - - 67 - - - - 62 - - 59 58 - - 55 - -<br>- - - - - 47 - - - - 42 41 - - - - - 35 - -<br>- - - - - - - - - 27 - - 24 - - - - 19 18 17<br>16 - - - - 11 10 - 8 - - - - 3 - 1 | SALEABLE | | 345650003 |
| MX123 CONN ASSY 73 CKT GRY OPT0 KEY B/52 | 345665703 | C-HSG-B0 | G-CAP-0-P | TPA-B0 | RS | LS | MAL | CPA | MSEAL | RSEAL | 72 71 70 69 - 67 66 65 64 63 62 61 60 - 58 - 56 - 54 -<br>52 51 50 - - 47 - 45 44 43 42 41 40 - 38 - 36 - 34 -<br>- 32 31 30 - 28 27 26 25 24 - 22 - 20 19 - -<br>16 15 14 13 - - - 9 8 - 6 5 4 3 2 1 | SALEABLE | | 345650003 |
| MX123 CONN ASSY 73 CKT BLU OPT0 KEY C/40 | 345665713 | C-HSG-C0 | G-CAP-0-P | TPA-C0 | RS | LS | MAL | CPA | MSEAL | RSEAL | 72 71 70 - 68 - - 65 - 63 - 61 - 59 58 - 56 - - 53<br>- - - 49 - 47 - - - 43 - 41 40 39 38 - 36 - - -<br>- - - 30 29 - - - 25 24 23 22 21 20 - - -<br>- - - - - - - - - - - 6 5 4 3 2 1 | SALEABLE | | 345650003 |
| MX123 CONN ASSY 73 CKT BLU OPT0 KEY C/36 | 345665723 | C-HSG-C0 | G-CAP-0-P | TPA-C0 | RS | LS | MAL | CPA | MSEAL | RSEAL | 72 71 70 - 68 - - 65 - 63 62 - - 59 58 - 56 55 - 53<br>- - - - - 47 - - - 43 42 - 40 39 38 - 36 35 - -<br>- 32 - 30 29 - - 26 - 24 23 22 21 20 19 - 17<br>- - - - - - - - - - - 6 5 4 3 2 1 | SALEABLE | | 345650003 |
| MX123 CONN ASSY 73 CKT BLK OPT0 KEY A/36 | 345665733 | C-HSG-A0 | G-CAP-0-P | TPA-A0 | RS | LS | MAL | CPA | MSEAL | RSEAL | 72 - - - 68 67 66 65 - - 62 61 - - - - - - - -<br>- - 50 - 48 47 46 - - - - - 40 39 38 - - 35 - 33<br>- - 31 - 29 - 27 - 25 24 23 22 21 20 - - 17<br>- - 14 13 - 11 - 9 8 7 6 5 4 - 2 1 | SALEABLE | | 345650003 |
| MX123 CONN ASSY 73 CKT BLK OPT0 KEY A/36 | 345665743 | C-HSG-A0 | G-CAP-0-P | TPA-A0 | RS | LS | MAL | CPA | MSEAL | RSEAL | 72 - - - 68 - 66 65 - - 62 61 - - 58 - - - - -<br>- - 50 - 48 47 46 - - - - - 40 39 38 - - 35 - 33<br>- - 31 - 29 - 27 - 25 24 23 22 21 20 - - 17<br>- - 14 13 - 11 - 9 8 7 6 5 4 - 2 1 | SALEABLE | | 345650003 |
| MX123 CONN ASSY 73 CKT BLK OPT0 KEY A/39 | 345665753 | C-HSG-A0 | G-CAP-0-P | TPA-A0 | RS | LS | MAL | CPA | MSEAL | RSEAL | 72 - - - 68 67 66 65 - - 62 61 - - 58 - - - - -<br>- - 50 - 48 47 46 - - - - - 40 39 38 - - 35 - 33<br>- - 31 - 29 - 27 - 25 24 - 22 - 20 - - 17<br>- - 14 13 - 11 - 9 - 7 6 - 4 - 2 1 | SALEABLE | | 345650003 |
| MX123 CONN ASSY 73 CKT BLU OPT0 KEY C/42 | 345665763 | C-HSG-C0 | G-CAP-0-P | TPA-C0 | RS | LS | MAL | CPA | MSEAL | RSEAL | - 71 - 69 - 67 - 65 64 - - 61 60 - 58 - 56 55 54 -<br>- - 50 49 - - - 45 - 43 - 41 - - 38 - - 35 - -<br>- 31 - 29 28 - - - - 23 - - - 19 18 17<br>16 - - - 12 11 - - - 7 - - - 3 - 1 | SALEABLE | | 345650003 |
| MX123 CONN ASSY 73 CKT BLU OPT0 KEY C/41 | 345665773 | C-HSG-C0 | G-CAP-0-P | TPA-C0 | RS | LS | MAL | CPA | MSEAL | RSEAL | - 71 - 69 - 67 66 65 64 - - 61 60 - - - 56 55 54 -<br>- - 50 49 - - 46 45 - 43 - 41 - - 38 - - 35 - -<br>- 31 - 29 28 - - - - 23 - - - 19 18 -<br>16 - - - 12 11 10 9 - 7 - - - 3 - - | SALEABLE | | 345650003 |
| MX123 CONN ASSY 73 CKT BLU OPT0 KEY C/38 | 345665783 | C-HSG-C0 | G-CAP-0-P | TPA-C0 | RS | LS | MAL | CPA | MSEAL | RSEAL | - 71 - 69 - 67 66 65 64 - - 61 60 - 58 - 56 55 54 -<br>- - 50 49 - - 46 45 - 43 - 41 - - 38 - - 35 - -<br>- 31 - 29 28 - - - - 23 - - - 19 18 17<br>16 - - - 12 11 10 9 - 7 - - - 3 - 1 | SALEABLE | | 345650003 |
| MX123 CONN ASSY 73 CKT BLK OPT0 KEY B/34 | 345665793 | C-HSG-B0 | G-CAP-0-P | TPA-B0 | RS | LS | MAL | CPA | MSEAL | RSEAL | - 71 - 69 - 67 - 65 64 63 62 61 - - 58 57 56 - - -<br>- 51 - 49 - 47 - 45 44 43 42 41 - - 38 37 36 - - -<br>- - - - - - - - - - 23 22 21 20 19 18 -<br>- 15 14 13 12 11 - 9 - 7 6 5 4 3 - - | SALEABLE | | 345650003 |

| ASSEMBLY DESCRIPTION | ASSEMBLY PART NUMBER | CONNECTOR HOUSING | GROMMET CAP | TPA | RIGHT SLIDE | LEFT SLIDE | MATE ASSIST LEVER | CPA | MAT SEAL | RING SEAL | BLOCKED TERMINALS<br>CAVITY WITH A NUMBER INDICATES BLOCKED TERMINAL POSITION<br>CAVITY WITHOUT A NUMBER INDICATES OPEN TERMINAL POSITION | STATUS | COMMENTS | INTEGRAL COMPONENTS SOLD SEPARATELY<br>DRESS COVER |
|---|---|---|---|---|---|---|---|---|---|---|---|---|---|---|
| MX123 CONN ASSY 73 CKT GRY OPT0 KEY B/55 | 345665803 | C-HSG-B0 | G-CAP-0-P | TPA-B0 | RS | LS | MAL | CPA | MSEAL | RSEAL | 72 71 70 69 68 67 66 - 64 63 62 61 60 - 58 - 56 - 54 -<br>52 51 50 - - - 46 45 44 43 42 41 40 - 38 - 36 - 34 -<br>- 32 31 30 - 28 27 26 25 24 - 22 - 20 19 18 -<br>- 16 15 14 13 - 11 10 9 8 - 6 5 4 3 2 1 | SALEABLE | | 345650003 |
| MX123 CONN ASSY 73 CKT GRY OPT0 KEY B/38 | 345665813 | C-HSG-B0 | G-CAP-0-P | TPA-B0 | RS | LS | MAL | CPA | MSEAL | RSEAL | - 71 - 69 - 67 - 65 64 63 62 61 - - 58 57 56 - - -<br>- 51 - 49 - 47 - 45 44 43 42 41 - - 38 37 36 - - -<br>- - - - - - - - - - - 22 21 20 - - -<br>- - 15 14 13 12 11 - 9 - - 6 5 4 3 - - | SALEABLE | | 345650003 |
| MX123 CONN ASSY 73 CKT BLK OPT0 KEY A/21 | 345665823 | C-HSG-A0 | G-CAP-0-P | TPA-A0 | RS | LS | MAL | CPA | MSEAL | RSEAL | - 71 - 69 68 67 66 65 64 - 62 61 60 59 58 57 56 55 54 53<br>- 51 50 - 48 47 46 45 44 - 42 - 40 39 38 37 36 35 34 33<br>- 32 - - 29 - - - 25 24 - 22 21 - - 18 17<br>- - - - 13 12 11 - 9 8 7 - 5 4 3 2 1 | SALEABLE | | 345650003 |
| MX123 CONN ASSY 73 CKT BLK OPT0 KEY A/22 | 345665833 | C-HSG-A0 | G-CAP-0-P | TPA-A0 | RS | LS | MAL | CPA | MSEAL | RSEAL | - 71 - 69 68 67 66 65 64 - 62 61 60 59 58 57 56 55 54 53<br>- 51 50 - 48 47 46 45 44 - 42 - 40 39 38 37 36 35 34 33<br>- 32 - - 29 - - - 25 24 - 22 21 - - 18 17<br>- - - 13 - 11 - 9 8 7 - 5 4 3 2 1 | SALEABLE | | 345650003 |
| MX123 CONN ASSY 73 CKT BLU OPT0 KEY C/36 | 345665863 | C-HSG-C0 | G-CAP-0-P | TPA-C0 | RS | LS | MAL | CPA | MSEAL | RSEAL | - 71 - 69 68 67 - 65 64 - - 61 60 - 58 - - - 54 -<br>- - 50 49 48 47 - 45 - 43 - 41 - - 38 - - 35 - -<br>- - 31 - 29 28 27 - - 24 23 - - 20 - - 17<br>- 16 - - 13 12 11 - - 8 7 - 5 4 - 2 1 | SALEABLE | | 345650003 |
| MX123 CONN ASSY 73 CKT GRY OPT0 KEY B/20 | 345665873 | C-HSG-B0 | G-CAP-0-P | TPA-B0 | RS | LS | MAL | CPA | MSEAL | RSEAL | - 71 70 69 68 67 66 65 64 63 - - 60 59 58 57 56 55 54 53<br>- 51 50 49 - - - 45 - - 42 - - 39 38 37 36 35 34 33<br>- 32 31 - 29 28 27 26 25 24 23 22 21 - - - 17<br>- - - - 13 12 11 10 9 8 7 6 5 - 3 2 1 | SALEABLE | | 345650003 |
| MX123 CONN ASSY 73 CKT GRY OPT0 KEY B/19 | 345665883 | C-HSG-B0 | G-CAP-0-P | TPA-B0 | RS | LS | MAL | CPA | MSEAL | RSEAL | - 71 70 69 68 67 66 65 64 63 - - 60 59 58 57 56 55 54 53<br>- 51 50 49 - - - 45 44 - 42 - - 39 38 37 36 35 34 33<br>- 32 31 - 29 28 27 26 25 24 23 22 21 - - - 17<br>- - - - 13 12 11 10 9 8 7 6 5 - 3 2 1 | SALEABLE | | 345650003 |
| MX123 CONN ASSY 73 CKT BLU OPT0 KEY C/35 | 345665893 | C-HSG-C0 | G-CAP-0-P | TPA-C0 | RS | LS | MAL | CPA | MSEAL | RSEAL | 72 71 70 - 68 - - 65 64 63 - 61 - 59 58 - 56 - - 53<br>- - - 49 - 47 - - - 43 - 41 40 39 38 - 36 - - -<br>- - 31 30 29 - - - 25 24 23 22 21 20 - - 17<br>- - - - - - - - 8 7 6 5 4 3 2 1 | SALEABLE | | 345650003 |
| MX123 CONN ASSY 73 CKT BLK OPT0 KEY A/40 | 345665903 | C-HSG-A0 | G-CAP-0-P | TPA-A0 | RS | LS | MAL | CPA | MSEAL | RSEAL | - - 70 - - - - 65 - - - 61 60 - 58 57 56 55 54 -<br>52 51 50 49 - 47 46 45 - - - 41 40 - 38 37 36 - 34 -<br>- 31 30 - 28 - 26 25 24 - 22 21 20 19 18 -<br>16 15 14 - - - 10 - - 7 6 - - - - - | SALEABLE | | 345650003 |
| MX123 CONN ASSY 73 CKT BLU OPT0 KEY C/34 | 345665913 | C-HSG-C0 | G-CAP-0-P | TPA-C0 | RS | LS | MAL | CPA | MSEAL | RSEAL | 72 71 70 - 68 - - 65 - 63 62 - - 59 58 - 56 55 - 53<br>- - - - - 47 - - - 43 42 - 40 39 38 - 36 35 - -<br>- 31 30 29 - - 26 - 24 23 22 21 20 19 - 17<br>- - - - - - - - 8 7 6 5 4 3 2 1 | SALEABLE | | 345650003 |
| MX123 CONN ASSY 73 CKT BLU OPT0 KEY C/38 | 345665933 | C-HSG-C0 | G-CAP-0-P | TPA-C0 | RS | LS | MAL | CPA | MSEAL | RSEAL | - 71 - 69 - 67 - 65 64 - - 61 60 - 58 - - - 54 -<br>- - 50 49 - - - 45 - 43 - 41 - - 38 37 36 35 - -<br>- 31 - 29 28 27 - - 24 - - - 20 19 18 17<br>- 16 - - 13 12 11 - - 8 - - - - 3 2 1 | SALEABLE | | 345650003 |
| MX123 CONN ASSY 73 CKT BLU OPT0 KEY C/41 | 345665943 | C-HSG-C0 | G-CAP-0-P | TPA-C0 | RS | LS | MAL | CPA | MSEAL | RSEAL | - 71 - 69 - - - 65 64 - - 61 60 - 58 - - - 54 -<br>- - 50 - - - - 45 - 43 - 41 - - 38 37 36 35 - -<br>- 31 - 29 28 - - - 24 23 - - - 19 18 17<br>- 16 - - - 12 11 - - 8 7 - - - 3 2 1 | SALEABLE | | 345650003 |

molex

# MX123 SEALED RCPT ASSY (73 Ckt)
## BOM & PIN OUT SHEET

| ASSEMBLY DESCRIPTION | ASSEMBLY PART NUMBER | CONNECTOR HOUSING | GROMMET CAP | TPA | RIGHT SLIDE | LEFT SLIDE | MATE ASSIST LEVER | CPA | MAT SEAL | RING SEAL | BLOCKED TERMINALS<br>CAVITY WITH A NUMBER INDICATES BLOCKED TERMINAL POSITION<br>CAVITY WITHOUT A NUMBER INDICATES OPEN TERMINAL POSITION | STATUS | COMMENTS | INTEGRAL COMPONENTS SOLD SEPARATELY<br>DRESS COVER |
|---|---|---|---|---|---|---|---|---|---|---|---|---|---|---|
| MX123 CONN ASSY 73 CKT BLK OPT0 KEY A/45 | 345665953 | C-HSG-A0 | G-CAP-0-P | TPA-A0 | RS | LS | MAL | CPA | MSEAL | RSEAL | 72 - - - 68 67 66 - - - - - - 59 - - - - - -<br>- - 50 - - - 46 - - - - - 40 39 38 - - 35 - 33<br>- - 31 - - - - 25 - 23 22 21 20 - - 17<br>- - 14 - - - - 9 8 7 6 5 4 - 2 1 | SALEABLE | | 345650003 |
| MX123 CONN ASSY 73 CKT GRY OPT0 KEY B/51 | 345665963 | C-HSG-B0 | G-CAP-0-P | TPA-B0 | RS | LS | MAL | CPA | MSEAL | RSEAL | - - - 69 - - - 65 64 63 - - - - - - - - -<br>- - - 49 - - - 45 44 43 - - - - - - - - -<br>- - - - - - - - - - 23 22 21 20 19 - 17<br>- - - - 12 11 - - - 7 6 5 4 - 2 1 | SALEABLE | | 345650003 |
| MX123 CONN ASSY 73 CKT BLU OPT0 KEY C/41 | 345665973 | C-HSG-C0 | G-CAP-0-P | TPA-C0 | RS | LS | MAL | CPA | MSEAL | RSEAL | - 71 - 69 - - - 65 64 - - 61 60 - 58 - - - 54 -<br>- - 50 49 - - - 45 - 43 - 41 - - 38 37 36 35 - -<br>- 31 - 29 28 - - - 24 23 - - 20 - - 17<br>16 - - 13 12 11 - - 8 7 - - - - 2 1 | SALEABLE | | 345650003 |
| MX123 CONN ASSY 73 CKT BLU OPT0 KEY C/36 | 345665983 | C-HSG-C0 | G-CAP-0-P | TPA-C0 | RS | LS | MAL | CPA | MSEAL | RSEAL | 72 71 70 - 68 - - 65 - 63 - 61 - 59 58 - 56 - - 53<br>- - - 49 - 47 - - - 43 - 41 40 39 38 - 36 - - -<br>- 31 30 29 - - - 25 24 23 22 21 20 - - 17<br>- - - - - - - - 8 7 6 5 4 3 2 1 | SALEABLE | | 345650003 |
| MX123 CONN ASSY 73 CKT BLK OPT0 KEY A/61 | 345665993 | C-HSG-A0 | G-CAP-0-P | TPA-A0 | RS | LS | MAL | CPA | MSEAL | RSEAL | 72 - - - 68 - - - 64 - - - - 59 - - - - - -<br>- - - - 48 - 46 - - - - - - - 38 - - - - 33<br>- - - - - - - - - - 22 - - - - -<br>- - - - - - - - - 7 - - 4 - 2 - | SALEABLE | | 345650003 |
| MX123 CONN ASSY 73 CKT GRY OPT0 KEY B/55 | 345666003 | C-HSG-B0 | G-CAP-0-P | TPA-B0 | RS | LS | MAL | CPA | MSEAL | RSEAL | 72 71 70 69 68 - - - 64 63 62 61 60 - 58 - 56 - 54 -<br>52 51 50 - - - 46 45 44 43 42 41 40 - 38 - 36 - 34 -<br>32 31 30 - 28 27 26 25 24 - 22 - 20 19 18 17<br>16 15 14 13 12 11 10 9 8 - 6 5 4 3 2 1 | SALEABLE | | 345650003 |
| MX123 CONN ASSY 73 CKT GRY OPT0 KEY B/46 | 345666013 | C-HSG-B0 | G-CAP-0-P | TPA-B0 | RS | LS | MAL | CPA | MSEAL | RSEAL | 72 71 70 - 68 - 66 - 64 63 62 - - - - - 56 55 - -<br>52 - - - - - - - 44 - 42 41 - - 38 - 36 35 - -<br>- - - - 28 27 - 25 - - - - - 19 - 17<br>- - - - 12 11 - - - - - - - 3 2 1 | SALEABLE | | 345650003 |
| MX123 CONN ASSY 73 CKT BLK OPT0 KEY A/56 | 345666023 | C-HSG-A0 | G-CAP-0-P | TPA-A0 | RS | LS | MAL | CPA | MSEAL | RSEAL | - - - - - - 66 65 64 63 62 61 - - - - - 55 - -<br>- - - - - - 46 - - - 42 41 - - - - - - - -<br>- - - - - 27 26 25 - - - - - - 18 -<br>- - 14 - - - - 9 8 - - - - - - - - | SALEABLE | | 345650003 |
| MX123 CONN ASSY 73 CKT BLK OPT0 KEY A/39 | 345666033 | C-HSG-A0 | G-CAP-0-P | TPA-A0 | RS | LS | MAL | CPA | MSEAL | RSEAL | 72 71 - - 68 67 66 65 64 - - - 60 59 - - - - - -<br>- - 50 - 48 47 46 45 - - - - 40 39 38 - - 35 - 33<br>- 31 30 - - - - 25 24 23 22 - 20 - - 17<br>- - 14 - - - - 9 - 7 6 - 4 - 2 1 | SALEABLE | | 345650003 |
| MX123 CONN ASSY 73 CKT GRY OPT0 KEY B/23 | 345666043 | C-HSG-B0 | G-CAP-0-P | TPA-B0 | RS | LS | MAL | CPA | MSEAL | RSEAL | 72 71 70 69 - - - - - 63 62 61 60 59 - 57 56 - 54 53<br>52 51 50 49 48 47 - - 44 43 42 41 40 39 - 37 36 - 34 33<br>- 31 - - - - 26 25 24 23 - 21 20 - 18 -<br>- 15 14 13 12 11 - 9 8 7 6 5 4 3 2 - | SALEABLE | | 345650003 |
| MX123 CONN ASSY 73 CKT GRY OPT0 KEY B/20 | 345666053 | C-HSG-B0 | G-CAP-0-P | TPA-B0 | RS | LS | MAL | CPA | MSEAL | RSEAL | - 71 70 69 68 67 66 65 64 63 - - 60 59 58 57 56 55 54 53<br>- 51 50 49 - - - 45 44 - 42 - - 39 38 37 36 35 34 33<br>32 31 - 29 28 27 26 25 24 23 22 21 - - - 17<br>- - - 13 12 11 10 9 8 7 6 5 - 3 - 1 | SALEABLE | | 345650003 |
| MX123 CONN ASSY 73 CKT BLU OPT0 KEY C/37 | 345666063 | C-HSG-C0 | G-CAP-0-P | TPA-C0 | RS | LS | MAL | CPA | MSEAL | RSEAL | 72 71 70 - 68 - - 65 - 63 - 61 - 59 58 - 56 - - 53<br>- - - 49 - 47 - - - 43 - 41 40 39 38 - 36 - - -<br>- 31 30 29 - - - 25 24 23 22 21 20 - - -<br>- - - - - - - - 8 7 6 5 4 3 2 1 | SALEABLE | | 345650003 |

| ASSEMBLY DESCRIPTION | ASSEMBLY PART NUMBER | CONNECTOR HOUSING | GROMMET CAP | TPA | RIGHT SLIDE | LEFT SLIDE | MATE ASSIST LEVER | CPA | MAT SEAL | RING SEAL | BLOCKED TERMINALS<br>CAVITY WITH A NUMBER INDICATES BLOCKED TERMINAL POSITION<br>CAVITY WITHOUT A NUMBER INDICATES OPEN TERMINAL POSITION | STATUS | COMMENTS | INTEGRAL COMPONENTS SOLD SEPARATELY<br>DRESS COVER |
|---|---|---|---|---|---|---|---|---|---|---|---|---|---|---|
| MX123 CONN ASSY 73 CKT BLU OPT0 KEY C/35 | 345666073 | C-HSG-C0 | G-CAP-0-P | TPA-C0 | RS | LS | MAL | CPA | MSEAL | RSEAL | 72 71 70 - 68 - - 65 - 63 62 - - 59 58 - 56 55 - 53<br>- - - - - 47 - - - 43 42 - 40 39 38 - 36 35 - -<br>- - 31 30 29 - - 26 - 24 23 22 21 20 19 - -<br>- - - - - - - - 8 7 6 5 4 3 2 1 | SALEABLE | | 345650003 |
| MX123 CONN ASSY 73 CKT BLU OPT0 KEY C/38 | 345666083 | C-HSG-C0 | G-CAP-0-P | TPA-C0 | RS | LS | MAL | CPA | MSEAL | RSEAL | - 71 - 69 - - - 65 64 - - 61 60 - 58 - 56 55 54 -<br>- - 50 49 - - - 45 - 43 - 41 - - 38 - - 35 - -<br>- 31 - 29 28 27 - - 24 23 - - 20 19 18 17<br>16 - - 13 12 11 - - 8 7 - - - 3 - 1 | SALEABLE | | 345650003 |
| MX123 CONN ASSY 73 CKT GRY OPT0 KEY B/22 | 345666093 | C-HSG-B0 | G-CAP-0-P | TPA-B0 | RS | LS | MAL | CPA | MSEAL | RSEAL | - 71 - 69 68 - 66 65 64 - - - - - 58 57 56 55 54 53<br>- 51 50 49 48 47 - 45 44 - 42 - - 39 38 37 36 35 34 33<br>32 31 30 29 28 - 26 25 24 23 22 21 - - - 17<br>- 15 - 13 12 - 10 9 8 7 6 5 - 3 2 1 | SALEABLE | | 345650003 |
| MX123 CONN ASSY 73 CKT GRY OPT0 KEY B/51 | 345666103 | C-HSG-B0 | G-CAP-0-P | TPA-B0 | RS | LS | MAL | CPA | MSEAL | RSEAL | 72 71 70 69 68 - - - 64 63 - 61 60 - 58 - 56 - 54 -<br>52 51 50 - - - 46 45 44 43 - 41 40 - 38 - 36 - 34 -<br>32 31 30 - 28 27 - 25 24 - 22 - 20 19 18 17<br>16 15 14 13 12 11 10 - 8 - 6 5 4 3 2 1 | SALEABLE | | 345650003 |
| MX123 CONN ASSY 73 CKT BLK OPT0 KEY A/66 | 345666113 | C-HSG-A0 | G-CAP-0-P | TPA-A0 | RS | LS | MAL | CPA | MSEAL | RSEAL | - - - - - 67 - - - - - - - 59 - - - - - -<br>- - - - - 47 - - - - - - - - - - - 35 - -<br>- - - - - - - - - - - - 24 - - - - - 17<br>- - - - - - - - - - - - - - - - - - 1 | SALEABLE | | 345650003 |
| MX123 CONN ASSY 73 CKT BLU OPT0 KEY C/33 | 345666123 | C-HSG-C0 | G-CAP-0-P | TPA-C0 | RS | LS | MAL | CPA | MSEAL | RSEAL | 72 71 70 - 68 - - 65 - 63 - 61 - 59 58 - 56 55 - 53<br>- - - 49 - 47 - - - 43 - 41 40 39 38 - 36 35 - -<br>32 31 30 29 - - - 25 24 23 22 21 20 19 18 17<br>- - - - - - - - - - - 6 5 4 3 2 1 | SALEABLE | | 345650003 |
| MX123 CONN ASSY 73 CKT BLU OPT9 KEY C/38 | 345666133 | C-HSG-C9 | G-CAP-9-P | TPA-C9 | RS | LS | MAL | CPA | MSEAL | RSEAL | - 71 - 69 - - 66 65 64 - - 61 60 - 58 - 56 55 54 -<br>- - 50 49 - - 46 45 - 43 - 41 - - - - - 35 - -<br>- 31 - 29 28 27 - - - 23 - - 20 19 18 17<br>16 - - 13 12 11 10 - - 7 - - - 3 - 1 | SALEABLE | | 345650003 |
| MX123 CONN ASSY 73 CKT GRY OPT9 KEY B/33 | 345666173 | C-HSG-B9 | G-CAP-9-P | TPA-B9 | RS | LS | MAL | CPA | MSEAL | RSEAL | 72 71 70 69 68 - - 65 64 63 62 61 60 59 58 57 56 55 54 53<br>52 51 50 49 - - 46 45 44 43 42 - 40 39 38 37 36 35 34 33<br>- - - 28 - - - - 23 - - 20 - - -<br>- - - - 12 - - - - - - - - - 2 - | SALEABLE | | 345650003 |
| MX123 CONN ASSY 73 CKT BLK OPT9 KEY A/32 | 345666183 | C-HSG-A9 | G-CAP-9-P | TPA-A9 | RS | LS | MAL | CPA | MSEAL | RSEAL | 72 71 70 69 68 67 - 65 64 63 62 61 60 59 58 57 56 55 54 53<br>52 51 50 49 - - 46 45 44 43 42 - 40 39 38 37 36 35 34 33<br>- - - - 28 - - - - 23 - - 20 - - -<br>- - - - 12 - - - - - - - - - 2 - | SALEABLE | | 345650003 |
| MX123 CONN ASSY 73 CKT GRY OPT9 KEY B/57 | 345666193 | C-HSG-B9 | G-CAP-9-P | TPA-B9 | RS | LS | MAL | CPA | MSEAL | RSEAL | - - - - - - - - - 63 - - - - - - - - - 53<br>- - - - 48 47 - 45 - 43 42 - - 39 - - - 35 34 33<br>- - - - - - - - - 23 22 - - 19 - -<br>- - - - - 11 - - - - - - - - - 1 | SALEABLE | | 345650003 |
| MX123 CONN ASSY 73 CKT BLK OPT0 KEY A/33 | 345666203 | C-HSG-A0 | G-CAP-0-P | TPA-A0 | RS | LS | MAL | CPA | MSEAL | RSEAL | 72 - - - - 67 66 - - - 62 - 60 - 58 - - 55 54 53<br>- - - - 48 - 46 45 44 43 42 - 40 39 - - - 35 - -<br>- - - - - - - - 26 25 - - 22 21 - - - 17<br>- 15 14 - - - - - 8 7 6 5 4 3 2 - | SALEABLE | | 345650003 |
| MX123 CONN ASSY 73 CKT BLK OPT9 KEY A/33 | 345666213 | C-HSG-A9 | G-CAP-9-P | TPA-A9 | RS | LS | MAL | CPA | MSEAL | RSEAL | 72 71 70 69 68 - - 65 64 63 62 61 60 59 58 57 56 55 54 53<br>52 51 50 49 - - 46 45 44 43 42 - 40 39 38 37 36 35 34 33<br>- - - - 28 - - - - 23 - - 20 - - -<br>- - - - 12 - - - - - - - - - 2 - | SALEABLE | | 345650003 |

molex

# MX123 SEALED RCPT ASSY (73 Ckt)
## BOM & PIN OUT SHEET

| ASSEMBLY DESCRIPTION | ASSEMBLY PART NUMBER | CONNECTOR HOUSING | GROMMET CAP | TPA | RIGHT SLIDE | LEFT SLIDE | MATE ASSIST LEVER | CPA | MAT SEAL | RING SEAL | BLOCKED TERMINALS<br>CAVITY WITH A NUMBER INDICATES BLOCKED TERMINAL POSITION<br>CAVITY WITHOUT A NUMBER INDICATES OPEN TERMINAL POSITION | STATUS | COMMENTS | INTEGRAL COMPONENTS SOLD SEPARATELY<br>DRESS COVER |
|---|---|---|---|---|---|---|---|---|---|---|---|---|---|---|
| MX123 CONN ASSY 73 CKT BLU OPT9 KEY C/36 | 345666223 | C-HSG-C9 | G-CAP-9-P | TPA-C9 | RS | LS | MAL | CPA | MSEAL | RSEAL | - 71 - 69 - 67 - 65 64 - - 61 60 - 58 - 56 55 54 -<br>- - 50 49 - - - 45 - 43 42 41 - - 38 37 36 35 - -<br>- 31 - 29 28 - - - 24 23 - - - 19 18 17<br>16 - - - 12 11 - - 8 7 - - - 3 2 1 | SALEABLE | | 345650003 |
| MX123 CONN ASSY 73 CKT GRY OPT9 KEY B/34 | 345666233 | C-HSG-B9 | G-CAP-9-P | TPA-B9 | RS | LS | MAL | CPA | MSEAL | RSEAL | - 71 - 69 - 67 - 65 64 63 62 61 - - 58 57 56 - - -<br>- 51 - 49 - 47 - 45 44 43 42 41 - - 38 37 36 - - -<br>- - - - - - - - - 23 22 21 20 19 18 -<br>- 15 14 13 12 11 - 9 - 7 6 5 4 3 - - | SALEABLE | | 345650003 |
| MX123 CONN ASSY 73 CKT BLK OPT9 KEY A/39 | 345666243 | C-HSG-A9 | G-CAP-9-P | TPA-A9 | RS | LS | MAL | CPA | MSEAL | RSEAL | 72 - - - 68 67 66 65 - - 62 61 - - - - - - - -<br>- - - - 48 47 46 - - - - - 40 - 38 - - 35 - 33<br>- 31 - 29 - 27 - 25 24 23 22 21 20 - - 17<br>- - - 13 - 11 - 9 8 7 6 5 4 - 2 1 | SALEABLE | | 345650003 |
| MX123 CONN ASSY 73 CKT BLU OPT9 KEY C/43 | 345666253 | C-HSG-C9 | G-CAP-9-P | TPA-C9 | RS | LS | MAL | CPA | MSEAL | RSEAL | - 71 - 69 - - - 65 64 - - 61 60 - 58 - 56 55 54 -<br>- - 50 - - - - 45 - 43 42 41 - - 38 - - 35 - -<br>- 31 - 29 28 - - - - 23 - - - 19 18 17<br>16 - - - 12 11 - - - 7 - - - 3 - 1 | SALEABLE | | 345650003 |
| MX123 CONN ASSY 73 CKT GRY OPT9 KEY B/53 | 345666263 | C-HSG-B9 | G-CAP-9-P | TPA-B9 | RS | LS | MAL | CPA | MSEAL | RSEAL | - - - 69 - - - 65 64 63 - - - - - - - - - -<br>- - - 49 - - - 45 44 43 - - - - - - - - - -<br>- - - - - - - - - 23 22 21 20 19 - -<br>- - - - 12 11 - 9 - 7 6 5 4 - - - | SALEABLE | | 345650003 |
| MX123 CONN ASSY 73 CKT GRY OPT9 KEY B/48 | 345666273 | C-HSG-B9 | G-CAP-9-P | TPA-B9 | RS | LS | MAL | CPA | MSEAL | RSEAL | 72 - - - 68 67 66 - - - - - - 59 - - - - - -<br>- - - - - - 46 - - - - - 40 - 38 - - 35 - 33<br>- 31 - - - - - 25 - 23 22 21 20 - - 17<br>- - - - - - - 9 8 7 6 5 4 - 2 1 | SALEABLE | | 345650003 |
| MX123 CONN ASSY 73 CKT BLU OPT9 KEY C/35 | 345666283 | C-HSG-C9 | G-CAP-9-P | TPA-C9 | RS | LS | MAL | CPA | MSEAL | RSEAL | - 71 - 69 - - - 65 64 - - 61 60 - 58 - - - 54 -<br>- - 50 49 - - - 45 - 43 42 41 - - 38 37 36 35 - -<br>- 31 - 29 28 - - - 24 23 - - 20 19 18 17<br>16 - - 13 12 11 - - 8 7 - - - - 2 1 | SALEABLE | | 345650003 |
| MX123 CONN ASSY 73 CKT GRY OPT9 KEY B/51 | 345666293 | C-HSG-B9 | G-CAP-9-P | TPA-B9 | RS | LS | MAL | CPA | MSEAL | RSEAL | - - - 69 - - - 65 64 63 - - - - - - - - - -<br>- - - 49 - - - 45 44 43 - - - - - - - - - -<br>- - - - - - - - - 23 22 21 20 19 18 -<br>- - - - 12 11 - 9 - 7 6 5 4 3 - - | SALEABLE | | 345650003 |
| MX123 CONN ASSY 73 CKT BLK OPT0 KEY A/32 | 345666303 | C-HSG-A0 | G-CAP-0-P | TPA-A0 | RS | LS | MAL | CPA | MSEAL | RSEAL | 72 - - - - 67 66 - - - 62 - 60 - 58 - - 55 54 53<br>- - - - 48 - 46 45 44 43 42 - 40 39 - - - 35 - -<br>- - - - - - 26 25 - - 22 21 - - - 17<br>- 15 14 - - - - - 8 7 6 5 4 3 - - | SALEABLE | | 345650003 |
| MX123 CONN ASSY 73 CKT GRY OPT9 KEY B/40 | 345666313 | C-HSG-B9 | G-CAP-9-P | TPA-B9 | RS | LS | MAL | CPA | MSEAL | RSEAL | 72 71 - - 68 67 66 65 64 - - - - 59 - - - - - -<br>- - - - 48 47 46 45 - - - - 40 - 38 - - 35 - 33<br>- 31 30 - - - - 25 24 23 22 21 20 - - 17<br>- - - - - - - 9 8 7 6 5 4 - 2 1 | SALEABLE | | 345650003 |
| MX123 CONN ASSY 73 CKT GRY OPT9 KEY B/39 | 345666323 | C-HSG-B9 | G-CAP-9-P | TPA-B9 | RS | LS | MAL | CPA | MSEAL | RSEAL | 72 - - - 68 67 66 65 - - 62 61 - - - - - - - -<br>- - - - 48 47 46 - - - - - 40 - 38 - - 35 - 33<br>- 31 - 29 - 27 - 25 24 23 22 21 20 - - 17<br>- - - 13 - 11 - 9 8 7 6 5 4 - 2 1 | SALEABLE | | 345650003 |
| MX123 CONN ASSY 73 CKT BLU OPT9 KEY C/40 | 345666333 | C-HSG-C9 | G-CAP-9-P | TPA-C9 | RS | LS | MAL | CPA | MSEAL | RSEAL | - 71 - 69 - - - 65 64 - - 61 60 - 58 - - - 54 -<br>- - 50 49 - - - 45 - 43 42 41 - - 38 37 36 35 - -<br>- 31 - 29 28 - - - 24 23 - - 20 - - 17<br>16 - - 13 12 11 - - 8 7 - - - - 2 1 | SALEABLE | | 345650003 |

| ASSEMBLY DESCRIPTION | ASSEMBLY PART NUMBER | CONNECTOR HOUSING | GROMMET CAP | TPA | RIGHT SLIDE | LEFT SLIDE | MATE ASSIST LEVER | CPA | MAT SEAL | RING SEAL | BLOCKED TERMINALS<br>CAVITY WITH A NUMBER INDICATES BLOCKED TERMINAL POSITION<br>CAVITY WITHOUT A NUMBER INDICATES OPEN TERMINAL POSITION | STATUS | COMMENTS | INTEGRAL COMPONENTS SOLD SEPARATELY<br>DRESS COVER |
|---|---|---|---|---|---|---|---|---|---|---|---|---|---|---|
| MX123 CONN ASSY 73 CKT BLK OPT9 KEY A/44 | 345666343 | C-HSG-A9 | G-CAP-9-P | TPA-A9 | RS | LS | MAL | CPA | MSEAL | RSEAL | 72 71 - - 68 67 66 65 64 - - - - 59 - - - - - -<br>- - - - 48 47 46 45 - - - - - - 38 - - 35 - 33<br>- - - - 31 30 - - - - 25 24 23 22 21 20 - - -<br>- - - - - - - - - - 9 8 7 6 5 4 - - - | SALEABLE | | 345650003 |
| MX123 CONN ASSY 73 CKT BLU OPT9 KEY C/43 | 345666353 | C-HSG-C9 | G-CAP-9-P | TPA-C9 | RS | LS | MAL | CPA | MSEAL | RSEAL | - 71 - 69 - 67 - 65 64 - - 61 60 - - - - - 54 -<br>- - 50 49 - - - 45 - 43 42 41 - - 38 37 36 35 - -<br>- 31 - 29 28 - - - 24 - - - - 19 18 -<br>16 - - - 12 11 - - 8 - - - - 3 2 - | SALEABLE | | 345650003 |
| MX123 CONN ASSY 73 CKT GRY OPT9 KEY B/38 | 345666363 | C-HSG-B9 | G-CAP-9-P | TPA-B9 | RS | LS | MAL | CPA | MSEAL | RSEAL | - 71 - 69 - 67 - 65 64 63 62 61 - - 58 57 56 - - -<br>- 51 - 49 - 47 - 45 44 43 42 41 - - 38 37 36 - - -<br>- - - - - - - - - - 22 21 20 - - -<br>- 15 14 13 12 11 - 9 - - 6 5 4 3 - - | SALEABLE | | 345650003 |
| MX123 CONN ASSY 73 CKT BLK OPT9 KEY A/50 | 345666373 | C-HSG-A9 | G-CAP-9-P | TPA-A9 | RS | LS | MAL | CPA | MSEAL | RSEAL | - - - - 68 - 66 65 - - 62 61 - - - - - - -<br>- - - - 48 - 46 - - - - - - - 38 - - 35 - 33<br>- 31 - 29 - 27 - 25 24 - 22 - 20 - - -<br>- - - 13 - 11 - 9 - 7 6 - 4 - - - | SALEABLE | | 345650003 |
| MX123 CONN ASSY 73 CKT BLK OPT9 KEY A/52 | 345666383 | C-HSG-A9 | G-CAP-9-P | TPA-A9 | RS | LS | MAL | CPA | MSEAL | RSEAL | - - - - - 67 - - - - 62 - - 59 58 - - 55 - -<br>- - - - - 47 - - - - - - - - - - 35 - -<br>- - - - - - - - 27 26 25 24 - - - 20 19 18 17<br>16 - - - - 11 10 - 8 - - - 4 3 - - | SALEABLE | | 345650003 |
| MX123 CONN ASSY 73 CKT BLU OPT9 KEY C/47 | 345666393 | C-HSG-C9 | G-CAP-9-P | TPA-C9 | RS | LS | MAL | CPA | MSEAL | RSEAL | 72 - - - 68 - - - - 63 - - - 59 - - 56 - - 53<br>- - - - - - - - - 43 - - 40 39 - - 36 - - -<br>- 31 30 29 - - - - 24 23 22 21 20 - - -<br>- - - - - - - - - - 8 7 6 5 4 3 2 1 | SALEABLE | | 345650003 |
| MX123 CONN ASSY 73 CKT BLK OPT0 KEY A/34 | 345666403 | C-HSG-A0 | G-CAP-0-P | TPA-A0 | RS | LS | MAL | CPA | MSEAL | RSEAL | 72 - 70 - - 67 66 - - - 62 - 60 - - 57 - 55 54 53<br>- 51 - - 48 - 46 45 44 43 42 - 40 39 - - - 35 - -<br>- - - - - - - 26 25 - - 22 21 - - - -<br>- 15 14 - - - - - 8 7 6 5 4 3 2 - | SALEABLE | | 345650003 |
| MX123 CONN ASSY 73 CKT GRY OPT9 KEY B/35 | 345666413 | C-HSG-B9 | G-CAP-9-P | TPA-B9 | RS | LS | MAL | CPA | MSEAL | RSEAL | - 71 70 69 - - 66 65 64 - - - - - 58 57 56 - 54 53<br>- 51 50 49 - - - 45 - - 42 - - 39 - - - - 34 33<br>32 31 - 29 28 - 26 25 24 23 22 21 - - - -<br>- - - 13 12 - 10 9 - 7 6 5 - 3 2 - | SALEABLE | | 345650003 |
| MX123 CONN ASSY 73 CKT BLU OPT9 KEY C/41 | 345666423 | C-HSG-C9 | G-CAP-9-P | TPA-C9 | RS | LS | MAL | CPA | MSEAL | RSEAL | - - - - 68 - - - - 63 62 61 60 59 58 57 - 55 - 53<br>- - - - 48 - - - - 43 42 41 40 - - 37 36 35 - 33<br>32 - - - - 27 - - 24 - - - 20 19 18 -<br>- - - - - 11 10 - 8 - - - 4 3 2 1 | SALEABLE | | 345650003 |
| MX123 CONN ASSY 73 CKT BLK OPT9 KEY A/36 | 345666433 | C-HSG-A9 | G-CAP-9-P | TPA-A9 | RS | LS | MAL | CPA | MSEAL | RSEAL | - 71 - 69 68 - 66 65 64 - 62 61 - - - - - - 54 53<br>- - 50 49 - - - 45 44 - - 41 - - - - - - 34 33<br>32 31 30 29 - - 26 25 24 23 - - 20 19 - -<br>16 15 14 13 - - 10 - 8 - 6 5 4 3 - - | SALEABLE | | 345650003 |
| MX123 CONN ASSY 73 CKT GRY OPT9 KEY B/64 | 345666443 | C-HSG-B9 | G-CAP-9-P | TPA-B9 | RS | LS | MAL | CPA | MSEAL | RSEAL | - - - - - - - - - - 62 - - 59 58 - - - 54 53<br>- - - - - - - - - - 42 - - 39 - - - - - -<br>- - - - - - - - 27 - - - - - - - - - -<br>- - - - - - - - - 10 - - - - - - - - - | SALEABLE | | 345650003 |
| MX123 CONN ASSY 73 CKT BLU OPT0 KEY C/43 | 345666453 | C-HSG-C0 | G-CAP-0-P | TPA-C0 | RS | LS | MAL | CPA | MSEAL | RSEAL | 72 - - - 68 - 66 - - 63 - - - 59 58 - 56 55 - 53<br>- - - - - - - - - 43 - - 40 39 38 - 36 35 - -<br>- 31 30 29 - - - - 24 23 22 21 20 19 - -<br>- - - - - - - - - - - 6 5 4 3 2 1 | SALEABLE | | 345650003 |

| ASSEMBLY DESCRIPTION | ASSEMBLY PART NUMBER | CONNECTOR HOUSING | GROMMET CAP | TPA | RIGHT SLIDE | LEFT SLIDE | MATE ASSIST LEVER | CPA | MAT SEAL | RING SEAL | BLOCKED TERMINALS<br>CAVITY WITH A NUMBER INDICATES BLOCKED TERMINAL POSITION<br>CAVITY WITHOUT A NUMBER INDICATES OPEN TERMINAL POSITION | STATUS | COMMENTS | INTEGRAL COMPONENTS SOLD SEPARATELY<br>DRESS COVER |
|---|---|---|---|---|---|---|---|---|---|---|---|---|---|---|
| MX123 CONN ASSY 73 CKT GRY OPT0 KEY B/23 | 345666463 | C-HSG-B0 | G-CAP-0-P | TPA-B0 | RS | LS | MAL | CPA | MSEAL | RSEAL | - 71 70 69 - - 66 65 64 63 - - 60 59 58 57 56 - 54 53<br>- 51 50 49 - - - 45 44 - 42 41 - 39 38 37 36 35 34 33<br>- 32 31 - 29 28 27 26 25 24 23 22 21 - - - 17<br>- - - 13 12 11 10 9 - 7 6 5 - 3 - 1 | SALEABLE | | 345650003 |
| MX123 CONN ASSY 73 CKT BLU OPT9 KEY C/40 | 345666473 | C-HSG-C9 | G-CAP-9-P | TPA-C9 | RS | LS | MAL | CPA | MSEAL | RSEAL | 72 71 - - 68 - - 65 - 63 - 61 - 59 58 - 56 - - 53<br>- - - 49 - 47 - - 43 - 41 40 39 38 - 36 - - -<br>- - 31 30 29 - - - 25 24 23 22 21 20 - - -<br>- - - - - - - - - - 6 5 4 3 2 1 | SALEABLE | | 345650003 |
| MX123 CONN ASSY 73 CKT BLK OPT9 KEY A/52 | 345666483 | C-HSG-A9 | G-CAP-9-P | TPA-A9 | RS | LS | MAL | CPA | MSEAL | RSEAL | - - - - - 67 - - - - 62 - - 59 58 - - 55 - -<br>- - - - - 47 - - - - 42 41 - - - - - 35 - -<br>- - - - - - - - 27 - - 24 - - - - 19 18 17<br>16 - - - - 11 10 - 8 - - - 4 3 - 1 | SALEABLE | | 345650003 |
| MX123 CONN ASSY 73 CKT GRY OPT9 KEY B/22 | 345666493 | C-HSG-B9 | G-CAP-9-P | TPA-B9 | RS | LS | MAL | CPA | MSEAL | RSEAL | - 71 - 69 68 67 66 65 64 63 - - 60 59 58 57 56 - 54 53<br>- 51 50 49 - - - 45 44 - 42 - - 39 38 37 36 35 34 33<br>- 32 31 - 29 28 27 26 25 24 23 22 21 - - - 17<br>- - - 13 12 11 10 9 8 7 6 5 - 3 - 1 | SALEABLE | | 345650003 |
| MX123 CONN ASSY 73 CKT BLK OPT0 KEY A/33 | 345666503 | C-HSG-A0 | G-CAP-0-P | TPA-A0 | RS | LS | MAL | CPA | MSEAL | RSEAL | 72 - 70 - - 67 66 - - - 62 - 60 - - 57 - 55 54 53<br>- 51 - - 48 - 46 45 44 43 42 - 40 39 - - - 35 - -<br>- - - - - - - 26 25 - - 22 21 - - - -<br>- 15 14 - - - - - 8 7 6 5 4 3 - - | SALEABLE | | 345650003 |
| MX123 CONN ASSY 73 CKT GRY OPT0 KEY B/23 | 345666513 | C-HSG-B0 | G-CAP-0-P | TPA-B0 | RS | LS | MAL | CPA | MSEAL | RSEAL | - 71 70 69 - - 66 65 64 63 - - 60 59 58 57 56 - - 53<br>- 51 50 49 48 47 - 45 44 - 42 41 - 39 38 37 36 35 34 33<br>- 32 31 30 29 28 27 26 25 24 23 22 21 - - - -<br>- - - 13 12 11 10 9 - 7 6 5 - - - 1 | SALEABLE | | 345650003 |
| MX123 CONN ASSY 73 CKT GRY OPT0 KEY B/25 | 345666523 | C-HSG-B0 | G-CAP-0-P | TPA-B0 | RS | LS | MAL | CPA | MSEAL | RSEAL | 72 71 70 69 - - 66 65 - 63 62 61 60 - - 57 56 55 - 53<br>52 51 50 49 48 47 - - 44 43 42 41 40 - - 37 36 35 34 33<br>- 31 - - - - 26 25 24 - - 21 20 19 18 -<br>16 - 14 - 12 - - 9 8 7 - 5 4 3 2 - | SALEABLE | | 345650003 |
| MX123 CONN ASSY 73 CKT GRY OPT9 KEY B/15 | 345666533 | C-HSG-B9 | G-CAP-9-P | TPA-B9 | RS | LS | MAL | CPA | MSEAL | RSEAL | 72 71 70 69 - - 66 65 - 63 62 61 60 59 58 57 56 55 54 53<br>52 51 50 49 48 47 - - 44 43 42 41 40 39 38 37 36 35 34 33<br>- 31 - - - 26 25 24 23 22 21 20 19 18 -<br>16 15 14 13 12 11 - 9 8 - 6 5 4 3 2 - | SALEABLE | | 345650003 |
| MX123 CONN ASSY 73 CKT BLK OPT9 KEY A/53 | 345666543 | C-HSG-A9 | G-CAP-9-P | TPA-A9 | RS | LS | MAL | CPA | MSEAL | RSEAL | - - - - - 67 - - - - 62 - - 59 58 - - 55 - -<br>- - - - - 47 - - - - 42 41 - - - - - 35 - -<br>- - - - - - - - 27 - - 24 - - - - 19 18 17<br>16 - - - - 11 10 - 8 - - - 3 - 1 | SALEABLE | | 345650003 |
| MX123 CONN ASSY 73 CKT BLK OPT9 KEY A/46 | 345666553 | C-HSG-A9 | G-CAP-9-P | TPA-A9 | RS | LS | MAL | CPA | MSEAL | RSEAL | - - - - 68 - 66 65 - - 62 61 - - - - - - - -<br>- - - - 48 - 46 - - - - - - - 38 - - 35 - 33<br>- 31 - 29 - 27 - 25 24 23 22 21 20 - - -<br>16 - - 13 12 11 - 9 - 7 6 - 4 - - - | SALEABLE | | 345650003 |
| MX123 CONN ASSY 73 CKT BLU OPT9 KEY C/41 | 345666563 | C-HSG-C9 | G-CAP-9-P | TPA-C9 | RS | LS | MAL | CPA | MSEAL | RSEAL | - 71 - 69 - 67 - 65 64 - - 61 60 - - - 56 55 54 -<br>- - 50 49 - - - 45 - 43 42 41 - - 38 37 36 35 - -<br>- 31 - 29 28 - - - 24 - - - - 19 18 -<br>16 - - - 12 11 - - 8 - - - - 3 2 - | SALEABLE | | 345650003 |
| MX123 CONN ASSY 73 CKT BLK OPT9 KEY A/47 | 345666573 | C-HSG-A9 | G-CAP-9-P | TPA-A9 | RS | LS | MAL | CPA | MSEAL | RSEAL | - - - - 68 - 66 65 - - 62 61 - - - - - - - -<br>- - - - 48 - 46 - - - - - - - 38 - - 35 - 33<br>- 31 - 29 - 27 - 25 24 - 22 - 20 - - 17<br>- - - 13 - 11 - 9 - 7 6 - 4 - 2 1 | SALEABLE | | 345650003 |

| ASSEMBLY DESCRIPTION | ASSEMBLY PART NUMBER | CONNECTOR HOUSING | GROMMET CAP | TPA | RIGHT SLIDE | LEFT SLIDE | MATE ASSIST LEVER | CPA | MAT SEAL | RING SEAL | BLOCKED TERMINALS<br>CAVITY WITH A NUMBER INDICATES BLOCKED TERMINAL POSITION<br>CAVITY WITHOUT A NUMBER INDICATES OPEN TERMINAL POSITION | STATUS | COMMENTS | INTEGRAL COMPONENTS SOLD SEPARATELY<br>DRESS COVER |
|---|---|---|---|---|---|---|---|---|---|---|---|---|---|---|
| MX123 CONN ASSY 73 CKT BLK OPT9 KEY A/41 | 345666583 | C-HSG-A9 | G-CAP-9-P | TPA-A9 | RS | LS | MAL | CPA | MSEAL | RSEAL | 72 71 - - 68 67 66 65 64 - - - - 59 - - - - - -<br>- - - - 48 47 46 45 - - - - - - 38 - - 35 - 33<br>- - - 31 30 - - - - 25 24 23 22 21 20 - - 17<br>- - - - - - - - 9 8 7 6 5 4 - 2 1 | SALEABLE | | 345650003 |
| MX123 CONN ASSY 73 CKT BLU OPT0 KEY C/37 | 345666593 | C-HSG-C0 | G-CAP-0-P | TPA-C0 | RS | LS | MAL | CPA | MSEAL | RSEAL | 72 71 70 - 68 - 66 65 - 63 - 61 - 59 58 - 56 - - 53<br>- - - 49 - 47 - - - 43 - 41 40 39 38 - 36 - - -<br>- 31 30 29 - - - 25 24 23 22 21 - - - -<br>- - - - - - - - 8 7 6 5 4 3 2 1 | SALEABLE | | 345650003 |
| MX123 CONN ASSY 73 CKT BLK OPT0 KEY A/50 | 345666613 | C-HSG-A0 | G-CAP-0-P | TPA-A0 | RS | LS | MAL | CPA | MSEAL | RSEAL | - - - - 68 67 - 65 - - 62 - - 59 58 - - 55 - -<br>- - - - 48 47 - - - - 42 41 - - - - - 35 - -<br>- - - - - 27 - - 24 - - - 20 19 18 17<br>- - - - - 11 10 - 8 - - - 4 3 - - | SALEABLE | | 345650003 |
| MX123 CONN ASSY 73 CKT GRY OPT9 KEY B/25 | 345666623 | C-HSG-B9 | G-CAP-9-P | TPA-B9 | RS | LS | MAL | CPA | MSEAL | RSEAL | 72 71 70 69 - - 66 65 - 63 62 61 60 - - 57 56 55 - 53<br>52 51 50 49 48 47 - - 44 43 42 41 40 - - 37 36 35 34 33<br>- 31 - - - - 26 25 24 - - 21 20 19 18 -<br>16 - 14 - 12 - - 9 8 7 - 5 4 3 2 - | SALEABLE | | 345650003 |
| MX123 CONN ASSY 73 CKT BLU OPT9 KEY C/33 | 345666633 | C-HSG-C9 | G-CAP-9-P | TPA-C9 | RS | LS | MAL | CPA | MSEAL | RSEAL | 72 71 70 - 68 - - 65 - 63 - 61 - 59 58 - 56 55 - 53<br>- - - 49 - 47 - - - 43 - 41 40 39 38 - 36 35 - -<br>32 31 30 29 - - - 25 24 23 22 21 20 19 18 17<br>- - - - - - - - - - 6 5 4 3 2 1 | SALEABLE | | 345650003 |
| MX123 CONN ASSY 73 CKT BLU OPT9 KEY C/37 | 345666643 | C-HSG-C9 | G-CAP-9-P | TPA-C9 | RS | LS | MAL | CPA | MSEAL | RSEAL | 72 - 70 69 - - 66 - - - 62 - - 59 - - 56 55 - 53<br>- - - 49 - 47 46 - 44 - 42 - 40 39 - - 36 35 - -<br>32 31 30 29 - - 26 - 24 23 22 21 20 19 - 17<br>- - - - - - - - - - 6 5 4 3 2 1 | SALEABLE | | 345650003 |
| MX123 CONN ASSY 73 CKT GRY OPT9 KEY B/30 | 345666653 | C-HSG-B9 | G-CAP-9-P | TPA-B9 | RS | LS | MAL | CPA | MSEAL | RSEAL | - 71 70 69 - 67 66 65 64 63 - - - - 58 57 56 - 54 53<br>- 51 50 49 - - - 45 - - 42 - - 39 - - - - 34 33<br>32 31 - 29 28 27 26 25 24 23 22 21 - - - 17<br>- 15 - 13 12 11 10 9 - 7 6 - - 3 2 - | SALEABLE | | 345650003 |
| MX123 CONN ASSY 73 CKT BLK OPT9 KEY A/51 | 345666663 | C-HSG-A9 | G-CAP-9-P | TPA-A9 | RS | LS | MAL | CPA | MSEAL | RSEAL | - - - - - 67 - - - - 62 61 - 59 58 - - 55 - 53<br>- - - - - 47 - - - - - 41 - - - - - 35 - 33<br>- - - - - 27 - - 24 - - - - 19 18 17<br>16 - - - - 11 10 - 8 - - - - 3 - 1 | SALEABLE | | 345650003 |
| MX123 CONN ASSY 73 CKT GRY OPT9 KEY B/65 | 345666673 | C-HSG-B9 | G-CAP-9-P | TPA-B9 | RS | LS | MAL | CPA | MSEAL | RSEAL | - - - - - - - - - - 62 - - - 58 - - - 54 53<br>- - - - - - - - - - 42 - - - - - - - - -<br>- - - - - 27 - 25 - - - - - - - -<br>- - - - - - 10 - - - - - - - - - | SALEABLE | | 345650003 |
| MX123 CONN ASSY 73 CKT BLK OPT9 KEY A/37 | 345666683 | C-HSG-A9 | G-CAP-9-P | TPA-A9 | RS | LS | MAL | CPA | MSEAL | RSEAL | - 71 - 69 68 - 66 65 64 - 62 61 - - - - 56 55 54 53<br>- 51 50 49 - - - 45 44 - - 41 - - - - 36 35 34 33<br>- - - - - - 26 25 24 23 - - 20 19 18 17<br>- - - - - - 10 - 8 7 - 5 4 3 - - | SALEABLE | | 345650003 |
| MX123 CONN ASSY 73 CKT BLU OPT9 KEY C/43 | 345666693 | C-HSG-C9 | G-CAP-9-P | TPA-C9 | RS | LS | MAL | CPA | MSEAL | RSEAL | - - - - 68 - - - - 63 62 61 60 59 58 57 - 55 - 53<br>- - - - 48 - - - - 43 42 41 40 - - 37 36 35 - 33<br>32 - - - - 27 - - - - - - 20 19 18 -<br>- - - - - 11 10 - - - - - 4 3 2 1 | SALEABLE | | 345650003 |
| MX123 CONN ASSY 73 CKT BLK OPT9 KEY A/54 | 345666713 | C-HSG-A9 | G-CAP-9-P | TPA-A9 | RS | LS | MAL | CPA | MSEAL | RSEAL | - - - - - 67 - - - - 62 - - 59 58 - - 55 - -<br>- - - - - 47 - - - - - - - - - - 35 - -<br>- - - - - 27 - - 24 - - - 20 19 18 17<br>16 - - - - 11 10 - 8 - - - 4 3 - - | SALEABLE | | 345650003 |

molex

# MX123 SEALED RCPT ASSY (73 Ckt)
## BOM & PIN OUT SHEET

| ASSEMBLY DESCRIPTION | ASSEMBLY PART NUMBER | CONNECTOR HOUSING | GROMMET CAP | TPA | RIGHT SLIDE | LEFT SLIDE | MATE ASSIST LEVER | CPA | MAT SEAL | RING SEAL | BLOCKED TERMINALS<br>CAVITY WITH A NUMBER INDICATES BLOCKED TERMINAL POSITION<br>CAVITY WITHOUT A NUMBER INDICATES OPEN TERMINAL POSITION | STATUS | COMMENTS | INTEGRAL COMPONENTS SOLD SEPARATELY<br>DRESS COVER |
|---|---|---|---|---|---|---|---|---|---|---|---|---|---|---|
| MX123 CONN ASSY 73 CKT BLU OPT9 KEY C/35 | 345666743 | C-HSG-C9 | G-CAP-9-P | TPA-C9 | RS | LS | MAL | CPA | MSEAL | RSEAL | 72 - 70 - - - 66 - - - 62 - - 59 58 - 56 55 54 53<br>- - - 49 - 47 - - 44 - 42 - 40 39 38 - 36 35 - -<br>- 32 31 30 29 - - 26 - 24 23 22 21 20 19 18 17<br>- - - - - - - - - - 6 5 4 3 2 1 | SALEABLE | | 345650003 |
| MX123 CONN ASSY 73 CKT BLK OPT9 KEY A/49 | 345666753 | C-HSG-A9 | G-CAP-9-P | TPA-A9 | RS | LS | MAL | CPA | MSEAL | RSEAL | - - - - - 67 - - - 63 62 - - 59 58 - - 55 - -<br>- - - - - 47 - - - - - 41 - - - - - 35 - -<br>- 32 - - - - 27 26 25 24 - - - - 19 18 17<br>16 - - - - 11 10 9 8 - - - - 3 - 1 | SALEABLE | | 345650003 |
| MX123 CONN ASSY 73 CKT GRY OPT9 KEY B/26 | 345666763 | C-HSG-B9 | G-CAP-9-P | TPA-B9 | RS | LS | MAL | CPA | MSEAL | RSEAL | - 71 70 69 - 67 66 65 64 63 - - 60 59 58 57 56 - 54 53<br>- 51 - - 48 47 - - 44 - 42 41 - 39 38 37 36 35 - 33<br>- 32 31 30 - 28 27 26 25 24 23 - - - - - 17<br>- - 15 - 13 12 11 10 9 - 7 - - - 3 2 1 | SALEABLE | | 345650003 |
| MX123 CONN ASSY 73 CKT BLU OPT0 KEY C/40 | 345666773 | C-HSG-C0 | G-CAP-0-P | TPA-C0 | RS | LS | MAL | CPA | MSEAL | RSEAL | - 71 - 69 - 67 - 65 64 - - 61 60 - - - 56 55 54 -<br>- - 50 - - - - 45 - 43 - 41 - - 38 37 36 35 - -<br>- - 31 - 29 28 27 - - 24 23 - - 20 - - -<br>16 - - 13 12 11 - - 8 7 - - - 3 2 - | SALEABLE | | 345650003 |
| MX123 CONN ASSY 73 CKT GRY OPT0 KEY B/37 | 345666783 | C-HSG-B0 | G-CAP-0-P | TPA-B0 | RS | LS | MAL | CPA | MSEAL | RSEAL | - 71 - 69 - 67 - 65 64 63 62 61 - - 58 57 56 - - -<br>- 51 - 49 - 47 - 45 44 - 42 41 - - 38 37 36 - - -<br>- - - - - - - - - - 22 21 20 19 18 -<br>- 15 14 13 12 11 - 9 - - 6 5 4 3 - - | SALEABLE | | 345650003 |
| MX123 CONN ASSY 73 CKT GRY OPT0 KEY B/42 | 345666793 | C-HSG-B0 | G-CAP-0-P | TPA-B0 | RS | LS | MAL | CPA | MSEAL | RSEAL | - 71 - 69 - 67 - 65 - - 62 61 - - 58 57 56 - - -<br>- 51 - 49 - 47 - 45 44 - 42 41 - - 38 37 36 - - -<br>- - - - - - - - - - 22 21 - 19 18 -<br>- 15 14 13 12 11 - 9 - - 6 - - 3 - - | SALEABLE | | 345650003 |
| MX123 CONN ASSY 73 CKT GRY OPT0 KEY B/55 | 345666803 | C-HSG-B0 | G-CAP-0-P | TPA-B0 | RS | LS | MAL | CPA | MSEAL | RSEAL | 72 71 70 69 68 67 66 - 64 63 62 61 60 - 58 - 56 - 54 -<br>52 51 50 - - 47 - 45 - 43 42 41 40 - 38 - 36 - 34 -<br>- 32 31 30 - - 27 26 25 24 - 22 - 20 19 18 17<br>- 16 15 14 13 12 11 10 9 8 - 6 5 4 3 2 1 | SALEABLE | | 345650003 |
| MX123 CONN ASSY 73 CKT BLK OPT9 KEY A/55 | 345666813 | C-HSG-A9 | G-CAP-9-P | TPA-A9 | RS | LS | MAL | CPA | MSEAL | RSEAL | 72 - - - - - 66 - - - - - - 59 - - - - - -<br>- - - - - - 46 - - - - - - - 38 - - 35 - 33<br>- - 31 - - - - - - - 23 22 - 20 19 - 17<br>- - - - - - - - - - 7 6 - 4 - 2 1 | SALEABLE | | 345650003 |
| MX123 CONN ASSY 73 CKT BLU OPT9 KEY C/45 | 345666823 | C-HSG-C9 | G-CAP-9-P | TPA-C9 | RS | LS | MAL | CPA | MSEAL | RSEAL | - 71 - 69 - - - 65 64 - - 61 60 - 58 - 56 55 54 -<br>- - 50 - - - - 45 - 43 42 - - - 38 - - - - -<br>- - 31 - 29 28 - - - - 23 - - - 19 18 17<br>16 - - - 12 11 - - - 7 - - - 3 - 1 | SALEABLE | | 345650003 |
| MX123 CONN ASSY 73 CKT BLK OPT0 KEY A/36 | 345666833 | C-HSG-A0 | G-CAP-0-P | TPA-A0 | RS | LS | MAL | CPA | MSEAL | RSEAL | 72 71 - - 68 67 66 65 64 - 62 61 - - - - - - - -<br>- - 50 - - - 46 45 - - - - - 39 38 - - 35 - -<br>- - 31 30 29 - 27 - 25 24 23 22 21 20 - - 17<br>- - 14 13 - 11 - 9 8 7 6 5 4 - 2 1 | SALEABLE | | 345650003 |
| MX123 CONN ASSY 73 CKT BLK OPT0 KEY A/54 | 345666843 | C-HSG-A0 | G-CAP-0-P | TPA-A0 | RS | LS | MAL | CPA | MSEAL | RSEAL | - - - - - 67 - - - - 62 - - 59 58 - - 55 - -<br>- - - - - 47 - - - - 42 41 - - - - - 35 - -<br>- - - - - - - 27 - - 24 - - - - 19 18 -<br>16 - - - - 11 10 - 8 - - - - 3 - 1 | SALEABLE | | 345650003 |
| MX123 CONN ASSY 73 CKT BLU OPT0 KEY C/43 | 345666853 | C-HSG-C0 | G-CAP-0-P | TPA-C0 | RS | LS | MAL | CPA | MSEAL | RSEAL | 72 71 70 - 68 - - 65 - 63 - - - 59 58 - 56 - - 53<br>- - - - - 47 - - - 43 - - 40 39 38 - 36 - - -<br>- - 31 30 29 - - - - 24 23 22 21 20 - - -<br>- - - - - - - - - - 6 5 4 3 2 1 | SALEABLE | | 345650003 |

| ASSEMBLY DESCRIPTION | ASSEMBLY PART NUMBER | CONNECTOR HOUSING | GROMMET CAP | TPA | RIGHT SLIDE | LEFT SLIDE | MATE ASSIST LEVER | CPA | MAT SEAL | RING SEAL | BLOCKED TERMINALS<br>CAVITY WITH A NUMBER INDICATES BLOCKED TERMINAL POSITION<br>CAVITY WITHOUT A NUMBER INDICATES OPEN TERMINAL POSITION | STATUS | COMMENTS | INTEGRAL COMPONENTS SOLD SEPARATELY<br>DRESS COVER |
|---|---|---|---|---|---|---|---|---|---|---|---|---|---|---|
| MX123 CONN ASSY 73 CKT BLK OPT0 KEY A/54 | 345666863 | C-HSG-A0 | G-CAP-0-P | TPA-A0 | RS | LS | MAL | CPA | MSEAL | RSEAL | - - - - - 67 - - - - 62 - - 59 58 - - 55 - -<br>- - - - - 47 - - - - - 41 - - - - - 35 - -<br>- - - - 27 - - 24 - - - - 19 18 17<br>16 - - - - 11 10 - 8 - - - - 3 - 1 | SALEABLE | | 345650003 |
| MX123 CONN ASSY 73 CKT GRY OPT9 KEY B/36 | 345666873 | C-HSG-B9 | G-CAP-9-P | TPA-B9 | RS | LS | MAL | CPA | MSEAL | RSEAL | - 71 70 69 - - 66 65 64 - - - - - 58 57 56 - 54 -<br>- 51 50 49 - - - 45 - - 42 - - 39 - - - - 34 33<br>32 31 - 29 28 - 26 25 24 23 22 21 - - - -<br>- - - 13 12 - 10 9 - 7 6 5 - 3 2 - | SALEABLE | | 345650003 |
| MX123 CONN ASSY 73 CKT BLK OPT9 KEY A/37 | 345666883 | C-HSG-A9 | G-CAP-9-P | TPA-A9 | RS | LS | MAL | CPA | MSEAL | RSEAL | - 71 - 69 68 - 66 65 64 - 62 61 - - - - - - 54 53<br>- - 50 49 - - - 45 44 - - 41 - - - - - - 34 33<br>32 31 30 29 - - 26 25 24 23 - - 20 19 - -<br>16 15 14 13 - - 10 - 8 - 6 - 4 3 - - | SALEABLE | | 345650003 |
| MX123 CONN ASSY 73 CKT GRY OPT0 KEY B/66 | 345666893 | C-HSG-B0 | G-CAP-0-P | TPA-B0 | RS | LS | MAL | CPA | MSEAL | RSEAL | - - - - - - - - - - - - - - - 58 - - - 54 53<br>- - - - - - - - - - 42 - - - - - - - - - -<br>- - - - - - 27 - 25 - - - - - - - -<br>- - - - - - - 10 - - - - - - - - - | SALEABLE | | 345650003 |
| MX123 CONN ASSY 73 CKT GRY OPT0 KEY B/55 | 345666903 | C-HSG-B0 | G-CAP-0-P | TPA-B0 | RS | LS | MAL | CPA | MSEAL | RSEAL | 72 71 70 69 68 67 66 65 - 63 62 61 60 - 58 - 56 - 54 -<br>52 51 50 - - 47 - 45 44 43 42 41 40 - 38 - 36 - 34 -<br>- 31 30 - 28 27 26 25 24 - 22 - 20 19 - 17<br>16 15 14 13 12 11 10 9 8 - 6 5 4 3 2 1 | SALEABLE | | 345650003 |
| MX123 CONN ASSY 73 CKT BLK OPT9 KEY A/63 | 345666913 | C-HSG-A9 | G-CAP-9-P | TPA-A9 | RS | LS | MAL | CPA | MSEAL | RSEAL | - - - - - - - - - - 62 61 - - - - - - - 53<br>- - - - - - - - - - - 41 - - - - - - - - 33<br>- - - - - - - - 24 - - - - 19 - -<br>- - - - - - - 10 - 8 - - - - 3 - - | SALEABLE | | 345650003 |
| MX123 CONN ASSY 73 CKT BLU OPT9 KEY C/56 | 345666923 | C-HSG-C9 | G-CAP-9-P | TPA-C9 | RS | LS | MAL | CPA | MSEAL | RSEAL | - - - - 68 - - - - 63 62 - - 59 - - - 55 - 53<br>- - - - - - - - - 43 42 - 40 - - - 36 35 - -<br>- - - - - - - - - - - - - - - - 20 19 - -<br>- - - - - - - - - - - - - - - - 4 3 2 1 | SALEABLE | | 345650003 |
| MX123 CONN ASSY 73 CKT GRY OPT9 KEY B/39 | 345666933 | C-HSG-B9 | G-CAP-9-P | TPA-B9 | RS | LS | MAL | CPA | MSEAL | RSEAL | - 71 70 69 - - 66 65 64 - - - - - 58 57 56 - 54 -<br>- 51 50 49 - - - 45 - - 42 - - 39 - - - - 34 33<br>32 31 - 29 28 - 26 25 24 23 - - - - - -<br>- - - 13 12 - 10 9 - 7 - 5 - 3 2 - | SALEABLE | | 345650003 |
| MX123 CONN ASSY 73 CKT BLK OPT9 KEY A/51 | 345666943 | C-HSG-A9 | G-CAP-9-P | TPA-A9 | RS | LS | MAL | CPA | MSEAL | RSEAL | - - - - - 67 - - - - 62 - - 59 58 - - 55 - -<br>- - - - - 47 - - - - - - - - - - - 35 - -<br>- - - - 27 26 25 24 - - - 20 19 18 17<br>16 - - - - 11 10 9 8 - - - 4 3 - - | SALEABLE | | 345650003 |
| MX123 CONN ASSY 73 CKT BLK OPT0 KEY A/52 | 345666953 | C-HSG-A0 | G-CAP-0-P | TPA-A0 | RS | LS | MAL | CPA | MSEAL | RSEAL | - - - - 68 67 - 65 - - 62 - - 59 58 - - 55 - -<br>- - - - 48 47 - - - - 42 41 - - - - - 35 - -<br>- - - - 27 - - 24 - - - - 19 18 17<br>- - - - - 11 10 - 8 - - - - 3 - - | SALEABLE | | 345650003 |
| MX123 CONN ASSY 73 CKT GRY OPT0 KEY B/24 | 345666963 | C-HSG-B0 | G-CAP-0-P | TPA-B0 | RS | LS | MAL | CPA | MSEAL | RSEAL | - 71 - 69 - - 66 65 64 63 - - 60 59 58 57 56 - 54 53<br>- 51 50 49 - - - 45 44 - 42 41 - 39 38 37 36 35 34 33<br>32 31 - 29 28 27 26 25 24 23 22 21 - - - 17<br>- - - 13 12 11 10 9 - 7 6 5 - 3 - 1 | SALEABLE | | 345650003 |
| MX123 CONN ASSY 73 CKT BLU OPT0 KEY C/46 | 345666973 | C-HSG-C0 | G-CAP-0-P | TPA-C0 | RS | LS | MAL | CPA | MSEAL | RSEAL | 72 - - - 68 - 66 - - 63 - - - 59 58 - 56 - - 53<br>- - - - - - - - - 43 - - 40 39 38 - 36 - - -<br>- 31 30 29 - - - - 24 23 22 21 20 - - -<br>- - - - - - - - - - 6 5 4 3 2 1 | SALEABLE | | 345650003 |

| ASSEMBLY DESCRIPTION | ASSEMBLY PART NUMBER | CONNECTOR HOUSING | GROMMET CAP | TPA | RIGHT SLIDE | LEFT SLIDE | MATE ASSIST LEVER | CPA | MAT SEAL | RING SEAL | BLOCKED TERMINALS<br>CAVITY WITH A NUMBER INDICATES BLOCKED TERMINAL POSITION<br>CAVITY WITHOUT A NUMBER INDICATES OPEN TERMINAL POSITION | STATUS | COMMENTS | INTEGRAL COMPONENTS SOLD SEPARATELY<br>DRESS COVER |
|---|---|---|---|---|---|---|---|---|---|---|---|---|---|---|
| MX123 CONN ASSY 73 CKT BLU OPT0 KEY C/36 | 345666983 | C-HSG-C0 | G-CAP-0-P | TPA-C0 | RS | LS | MAL | CPA | MSEAL | RSEAL | 72 - 70 - 68 - 66 - - 63 - 61 - 59 58 - 56 55 - 53<br>- - - 49 - - - - - 43 - 41 40 39 38 - 36 35 - -<br>-<br>32 31 30 29 - - - 25 24 23 22 21 20 19 - 17<br>- - - - - - - - - - 6 5 4 3 2 1 | SALEABLE | | 345650003 |
| MX123 CONN ASSY 73 CKT GRY OPT0 KEY B/43 | 345667003 | C-HSG-B0 | G-CAP-0-P | TPA-B0 | RS | LS | MAL | CPA | MSEAL | RSEAL | 72 71 70 69 68 - - 65 64 63 62 61 60 - 58 - - - 54 -<br>52 51 - - - - 46 45 44 43 42 41 40 - 38 - - - 34 -<br>-<br>32 31 30 - 28 27 26 25 24 - 22 - 20 19 - -<br>16 - 14 - - 11 10 9 - - - - - - 2 1 | SALEABLE | | 345650003 |
| MX123 CONN ASSY 73 CKT BLK OPT9 KEY A/44 | 345667013 | C-HSG-A9 | G-CAP-9-P | TPA-A9 | RS | LS | MAL | CPA | MSEAL | RSEAL | 72 - - - 68 67 66 65 - - - - - - - - - - - -<br>- - - - 48 47 46 - - - - - 40 - 38 - - 35 - 33<br>-<br>- 31 30 - - - - 25 24 23 22 21 20 - - 17<br>- - - - - - - 9 8 7 6 5 4 - 2 1 | SALEABLE | | 345650003 |
| MX123 CONN ASSY 73 CKT BLK OPT0 KEY A/51 | 345667023 | C-HSG-A0 | G-CAP-0-P | TPA-A0 | RS | LS | MAL | CPA | MSEAL | RSEAL | - - - - - 67 - - - 63 62 - - 59 58 - - 55 - -<br>- - - - - 47 - - - - 42 41 - - - - - 35 - -<br>-<br>32 - - - - 27 - - 24 - - - - 19 18 17<br>16 - - - - 11 10 - 8 - - - - 3 - 1 | SALEABLE | | 345650003 |
| MX123 CONN ASSY 73 CKT BLK OPT0 KEY A/41 | 345667033 | C-HSG-A0 | G-CAP-0-P | TPA-A0 | RS | LS | MAL | CPA | MSEAL | RSEAL | 72 71 - - 68 67 66 - 64 - - - - 59 - - - - - -<br>- - 50 - 48 47 46 45 - - - - 40 39 38 - - 35 - 33<br>-<br>- 31 30 - - - - 25 24 23 22 - 20 - - 17<br>- - 14 - - - - 9 - 7 6 - 4 - 2 1 | SALEABLE | | 345650003 |
| MX123 CONN ASSY 73 CKT GRY OPT0 KEY B/24 | 345667043 | C-HSG-B0 | G-CAP-0-P | TPA-B0 | RS | LS | MAL | CPA | MSEAL | RSEAL | - 71 70 69 - - 66 65 64 - - - - - 58 57 56 - 54 53<br>- 51 50 49 48 47 - 45 44 - 42 - - 39 38 37 36 35 34 33<br>-<br>32 31 30 29 28 - 26 25 24 23 22 21 - - - 17<br>- 15 - 13 12 - 10 9 - 7 6 5 - 3 2 1 | SALEABLE | | 345650003 |
| MX123 CONN ASSY 73 CKT BLU OPT0 KEY C/39 | 345667053 | C-HSG-C0 | G-CAP-0-P | TPA-C0 | RS | LS | MAL | CPA | MSEAL | RSEAL | 72 - 70 - 68 - 66 - - 63 - - - 59 58 - 56 55 - 53<br>- - - - - - - - - 43 - - 40 39 38 - 36 35 - -<br>-<br>32 31 30 29 - - - - 24 23 22 21 20 19 18 17<br>- - - - - - - - - - 6 5 4 3 2 1 | SALEABLE | | 345650003 |
| MX123 CONN ASSY 73 CKT BLU OPT0 KEY C/35 | 345667063 | C-HSG-C0 | G-CAP-0-P | TPA-C0 | RS | LS | MAL | CPA | MSEAL | RSEAL | - 71 - 69 - - - 65 64 - - 61 60 - 58 - 56 55 54 -<br>- - 50 49 - - - 45 - 43 42 41 - - 38 37 36 35 - -<br>-<br>- 31 - 29 28 27 - - 24 23 - - 20 19 18 17<br>16 - - - 12 11 - - 8 7 - - - 3 2 1 | SALEABLE | | 345650003 |
| MX123 CONN ASSY 73 CKT NAT OPT9 KEY F/17 | 345667073 | C-HSG-F9 | G-CAP-9-P | TPA-F9 | RS | LS | MAL | CPA | MSEAL | RSEAL | 72 71 70 - - 67 66 65 64 63 62 61 60 59 - - 56 55 54 53<br>52 51 50 49 48 47 46 45 44 - - 41 40 39 - - 36 35 34 -<br>-<br>32 31 - 29 28 27 26 25 24 23 22 21 20 - - -<br>16 15 14 13 12 11 10 9 8 7 6 5 4 - - - | SALEABLE | | 345650003 |
| MX123 CONN ASSY 73 CKT GRY OPT9 KEY B/13 | 345667083 | C-HSG-B9 | G-CAP-9-P | TPA-B9 | RS | LS | MAL | CPA | MSEAL | RSEAL | 72 71 70 69 68 67 66 65 64 63 62 61 60 59 58 57 56 55 54 53<br>52 51 50 49 48 47 46 45 44 43 42 41 40 39 38 37 36 35 34 33<br>-<br>32 31 30 29 28 27 26 25 24 23 22 21 20 19 18 17<br>- - - - - - - 9 - - 6 5 4 - - - | SALEABLE | | 345650003 |
| MX123 CONN ASSY 73 CKT GRY OPT9 KEY B/49 | 345667093 | C-HSG-B9 | G-CAP-9-P | TPA-B9 | RS | LS | MAL | CPA | MSEAL | RSEAL | - - - - - - - - - - 62 61 60 - 58 57 56 55 54 -<br>- - - - - - - - - - 42 41 40 - 38 37 36 35 - -<br>-<br>- - - - - - - - - - 22 21 20 19 18 -<br>- - - - - - - 9 - - 6 5 4 - - - | SALEABLE | | 345650003 |
| MX123 CONN ASSY 73 CKT BLK OPT0 KEY A/25 | 345667103 | C-HSG-A0 | G-CAP-0-P | TPA-A0 | RS | LS | MAL | CPA | MSEAL | RSEAL | - - - - - - - 65 - - - 61 - - 58 57 56 - - -<br>- 51 50 - - 47 46 45 - - - 41 - - 38 37 36 - - -<br>-<br>- 31 30 - - - 26 25 - - 22 21 20 - - -<br>- 15 14 - - - 10 - - - - - - - - - | SALEABLE | | 345650003 |

| ASSEMBLY DESCRIPTION | ASSEMBLY PART NUMBER | CONNECTOR HOUSING | GROMMET CAP | TPA | RIGHT SLIDE | LEFT SLIDE | MATE ASSIST LEVER | CPA | MAT SEAL | RING SEAL | BLOCKED TERMINALS<br>CAVITY WITH A NUMBER INDICATES BLOCKED TERMINAL POSITION<br>CAVITY WITHOUT A NUMBER INDICATES OPEN TERMINAL POSITION | STATUS | COMMENTS | INTEGRAL COMPONENTS SOLD SEPARATELY<br>DRESS COVER |
|---|---|---|---|---|---|---|---|---|---|---|---|---|---|---|
| MX123 CONN ASSY 73 CKT GRY OPT9 KEY B/8 | 345667133 | C-HSG-B9 | G-CAP-9-P | TPA-B9 | RS | LS | MAL | CPA | MSEAL | RSEAL | 72 71 70 69 68 67 66 65 64 63 62 61 60 59 - 57 56 55 - -<br>52 51 50 49 48 47 46 45 44 43 - 41 40 39 38 37 36 35 34 33<br>- 32 31 30 29 28 - 26 - 24 23 22 21 20 19 18 17<br>16 15 14 13 12 11 - 9 8 7 6 5 4 3 2 1 | SALEABLE | | 345650003 |
| MX123 CONN ASSY 73 CKT BLK OPT0 KEY A/35 | 345667143 | C-HSG-A0 | G-CAP-0-P | TPA-A0 | RS | LS | MAL | CPA | MSEAL | RSEAL | 72 71 - - 68 67 66 65 64 - 62 61 - - - - - - -<br>- - 50 - - - 46 45 - - - - 40 39 38 - - 35 - -<br>- - 31 30 29 - 27 - 25 24 23 22 21 20 - - 17<br>- - 14 13 - 11 - 9 8 7 6 5 4 - 2 1 | SALEABLE | | 345650003 |
| MX123 CONN ASSY 73 CKT BLU OPT0 KEY C/45 | 345667153 | C-HSG-C0 | G-CAP-0-P | TPA-C0 | RS | LS | MAL | CPA | MSEAL | RSEAL | - 71 - 69 - 67 - 65 64 - - 61 60 - - - 56 55 54 -<br>- - 50 - - - - 45 - 43 - 41 - - 38 - - 35 - -<br>- 31 - 29 28 27 - - - 23 - - 20 - - -<br>16 - - 13 12 11 - - - 7 - - - 3 - - | SALEABLE | | 345650003 |
| MX123 CONN ASSY 73 CKT BLK OPT0 KEY A/45 | 345667163 | C-HSG-A0 | G-CAP-0-P | TPA-A0 | RS | LS | MAL | CPA | MSEAL | RSEAL | - 71 - - - - 66 65 64 63 62 - - 59 58 57 - - - -<br>- 51 - - - - 46 - - - 42 - - 39 38 37 36 - - -<br>32 31 30 - - 27 26 - - 23 22 21 - - - -<br>- - 14 13 12 - 10 - - - - - - - - - | SALEABLE | | 345650003 |
| MX123 CONN ASSY 73 CKT GRY OPT0 KEY B/23 | 345667173 | C-HSG-B0 | G-CAP-0-P | TPA-B0 | RS | LS | MAL | CPA | MSEAL | RSEAL | 72 71 70 69 - - - - - - 62 61 60 59 - 57 56 - 54 53<br>52 51 50 49 48 47 - - 44 - 42 41 40 39 - 37 36 35 - 33<br>- 31 - - - - 26 25 24 23 - 21 20 19 18 -<br>- 15 14 13 12 11 - 9 8 7 6 5 4 3 2 1 | SALEABLE | | 345650003 |
| MX123 CONN ASSY 73 CKT GRY OPT0 KEY B/72 | 345667183 | C-HSG-B0 | G-CAP-0-P | TPA-B0 | RS | LS | MAL | CPA | MSEAL | RSEAL | - - - - - - - - - - - - - - - - - - - - -<br>- - - - - - - - - - - - - - - - - - - - -<br>- - - - - - - - - 23 - - - - - -<br>- - - - - - - - - - - - - - - - - - - - | SALEABLE | | 345650003 |
| MX123 CONN ASSY 73 CKT BLK OPT0 KEY A/41 | 345667193 | C-HSG-A0 | G-CAP-0-P | TPA-A0 | RS | LS | MAL | CPA | MSEAL | RSEAL | - 71 - - 68 67 66 65 64 - - - - 59 - - - - - -<br>- - 50 - 48 47 46 45 - - - - 40 39 38 - - 35 - 33<br>- 31 30 - - - - 25 24 23 22 21 20 - - -<br>- - 14 - - - - 9 8 7 6 5 4 - - - | SALEABLE | | 345650003 |
| MX123 CONN ASSY 73 CKT GRY OPT0 KEY B/25 | 345667203 | C-HSG-B0 | G-CAP-0-P | TPA-B0 | RS | LS | MAL | CPA | MSEAL | RSEAL | - - - - - - - - - - - 61 - - 58 57 56 - - -<br>- 51 50 - - 47 46 45 - - - 41 40 - 38 37 36 - - -<br>- 31 30 - 28 - 26 25 - - 22 21 - - - -<br>- 15 14 - - - 10 - - - - - - - - - | SALEABLE | | 345650003 |
| MX123 CONN ASSY 73 CKT BLK OPT0 KEY A/30 | 345667213 | C-HSG-A0 | G-CAP-0-P | TPA-A0 | RS | LS | MAL | CPA | MSEAL | RSEAL | 72 71 - - 68 67 66 65 64 - 62 61 60 59 - 57 - 55 - 53<br>- - 50 - 48 - 46 45 - - - - 40 - 38 37 - 35 - 33<br>- 31 30 29 - 27 - 25 24 23 22 21 20 - - -<br>- 15 14 13 - 11 - 9 8 7 6 5 4 - - - | SALEABLE | | 345650003 |
| MX123 CONN ASSY 73 CKT BLU OPT0 KEY C/41 | 345667223 | C-HSG-C0 | G-CAP-0-P | TPA-C0 | RS | LS | MAL | CPA | MSEAL | RSEAL | - 71 - 69 - 67 - 65 64 - - 61 60 - 58 - 56 55 54 -<br>- - 50 49 - - - 45 - 43 - 41 - - 38 - - 35 - -<br>- 31 - 29 28 27 - - - 23 - - - 19 18 17<br>16 - - - 12 11 - - - 7 - - - 3 - 1 | SALEABLE | | 345650003 |
| MX123 CONN ASSY 73 CKT BLK OPT9 KEY A/29 | 345667233 | C-HSG-A9 | G-CAP-9-P | TPA-A9 | RS | LS | MAL | CPA | MSEAL | RSEAL | - 71 70 69 68 67 66 65 64 63 - - 60 59 58 - - - - 53<br>- - 50 49 48 47 - - 44 - 42 41 - 39 38 - 36 - - 33<br>- 31 - - 28 27 26 - 24 23 22 21 - 19 18 17<br>- - 14 - 12 - - - 8 7 6 5 - 3 2 1 | SALEABLE | | 345650003 |
| MX123 CONN ASSY 73 CKT BLK OPT9 KEY A/33 | 345667243 | C-HSG-A9 | G-CAP-9-P | TPA-A9 | RS | LS | MAL | CPA | MSEAL | RSEAL | - 71 70 69 68 67 66 65 64 63 - - 60 59 - - - - - 53<br>- - 50 49 - 47 - - 44 - 42 - - 39 38 - 36 - - 33<br>- 31 - - 28 27 26 - 24 23 22 21 - 19 18 17<br>- - 14 - 12 - - - 8 7 6 5 - - 2 1 | SALEABLE | | 345650003 |

| ASSEMBLY DESCRIPTION | ASSEMBLY PART NUMBER | CONNECTOR HOUSING | GROMMET CAP | TPA | RIGHT SLIDE | LEFT SLIDE | MATE ASSIST LEVER | CPA | MAT SEAL | RING SEAL | BLOCKED TERMINALS<br>CAVITY WITH A NUMBER INDICATES BLOCKED TERMINAL POSITION<br>CAVITY WITHOUT A NUMBER INDICATES OPEN TERMINAL POSITION | STATUS | COMMENTS | INTEGRAL COMPONENTS SOLD SEPARATELY<br>DRESS COVER |
|---|---|---|---|---|---|---|---|---|---|---|---|---|---|---|
| MX123 CONN ASSY 73 CKT GRY OPT0 KEY B/19 | 345667253 | C-HSG-B0 | G-CAP-0-P | TPA-B0 | RS | LS | MAL | CPA | MSEAL | RSEAL | - 71 70 69 68 67 66 65 64 63 - - 60 59 58 57 56 55 54 53<br>- 51 50 49 - - - 45 - - 42 - - 39 38 37 36 35 34 33<br>- 32 31 - 29 28 27 26 25 24 23 22 21 - - - 17<br>- 15 - 13 12 11 10 9 8 7 6 5 - 3 2 1 | SALEABLE | | 345650003 |
| MX123 CONN ASSY 73 CKT BLU OPT0 KEY C/34 | 345667263 | C-HSG-C0 | G-CAP-0-P | TPA-C0 | RS | LS | MAL | CPA | MSEAL | RSEAL | 72 71 70 - 68 - - 65 - 63 - 61 - 59 58 - 56 55 - 53<br>- - - 49 - 47 - - - 43 - 41 40 39 38 - 36 35 - -<br>- 32 31 30 29 - - - 25 24 23 22 21 20 19 - 17<br>- - - - - - - - - - 6 5 4 3 2 1 | SALEABLE | | 345650003 |
| MX123 CONN ASSY 73 CKT BLU OPT0 KEY C/39 | 345667273 | C-HSG-C0 | G-CAP-0-P | TPA-C0 | RS | LS | MAL | CPA | MSEAL | RSEAL | 72 71 70 - 68 - - 65 - 63 - 61 - 59 58 - 56 - - 53<br>- - - 49 - 47 - - - 43 - 41 40 39 38 - 36 - - -<br>- 31 30 29 - - - 25 24 23 22 21 20 - - -<br>- - - - - - - - - - 6 5 4 3 2 1 | SALEABLE | | 345650003 |
| MX123 CONN ASSY 73 CKT BLU OPT0 KEY C/35 | 345667283 | C-HSG-C0 | G-CAP-0-P | TPA-C0 | RS | LS | MAL | CPA | MSEAL | RSEAL | 72 71 70 - 68 - - 65 - 63 62 - - 59 58 - 56 55 - 53<br>- - - - - 47 - - - 43 42 - 40 39 38 - 36 35 - -<br>- 32 31 30 29 - - 26 - 24 23 22 21 20 19 - 17<br>- - - - - - - - - - 6 5 4 3 2 1 | SALEABLE | | 345650003 |
| MX123 CONN ASSY 73 CKT BLK OPT9 KEY A/49 | 345667293 | C-HSG-A9 | G-CAP-9-P | TPA-A9 | RS | LS | MAL | CPA | MSEAL | RSEAL | - - - - - - - - - - 62 61 60 - 58 57 56 55 54 -<br>- - - - - - - - - - 42 41 40 - 38 37 36 35 - -<br>- - - - - - - - - - - - - 22 21 20 19 18 -<br>- - - - - - - - 9 - - 6 5 4 - - - | SALEABLE | | 345650003 |
| MX123 CONN ASSY 73 CKT GRY OPT0 KEY B/49 | 345667303 | C-HSG-B0 | G-CAP-0-P | TPA-B0 | RS | LS | MAL | CPA | MSEAL | RSEAL | 72 71 70 - - 67 - 65 64 63 62 61 60 - 58 57 56 - 54 -<br>52 51 50 - - 47 - 45 - 43 42 41 40 - 38 - 36 - 34 -<br>- 32 31 30 - - 27 26 25 24 - 22 - 20 19 - -<br>- 16 15 14 13 - - - 9 8 - 6 5 4 3 2 1 | SALEABLE | | 345650003 |
| MX123 CONN ASSY 73 CKT GRY OPT0 KEY B/22 | 345667313 | C-HSG-B0 | G-CAP-0-P | TPA-B0 | RS | LS | MAL | CPA | MSEAL | RSEAL | - 71 70 69 68 - 66 65 64 63 - - 60 59 58 57 56 - 54 53<br>- 51 50 49 - - - 45 44 - 42 41 - 39 38 37 36 35 34 33<br>- 32 31 - 29 28 27 26 25 24 23 - - - - - 17<br>- 15 - 13 12 11 10 9 8 7 - 5 - 3 2 1 | SALEABLE | | 345650003 |
| MX123 CONN ASSY 73 CKT GRY OPT9 KEY B/66 | 345667333 | C-HSG-B9 | G-CAP-9-P | TPA-B9 | RS | LS | MAL | CPA | MSEAL | RSEAL | - - - - - - - - - - - - - - 58 - - - 54 53<br>- - - - - - - - - - 42 - - - - - - - - -<br>- - - - - - 27 - 25 - - - - - - - -<br>- - - - - - - 10 - - - - - - - - - | SALEABLE | | 345650003 |
| MX123 CONN ASSY 73 CKT GRY OPT9 KEY B/33 | 345667343 | C-HSG-B9 | G-CAP-9-P | TPA-B9 | RS | LS | MAL | CPA | MSEAL | RSEAL | 72 71 70 69 - - 66 65 - - 62 61 60 - - 57 56 - - 53<br>52 51 50 49 48 47 - - - - 42 41 40 - - 37 36 - 34 33<br>- 31 - - - - 26 25 24 - - 21 20 - 18 -<br>- 16 - 14 - - 11 - - 8 7 - 5 - 3 2 - | SALEABLE | | 345650003 |
| MX123 CONN ASSY 73 CKT BLU OPT9 KEY C/40 | 345667353 | C-HSG-C9 | G-CAP-9-P | TPA-C9 | RS | LS | MAL | CPA | MSEAL | RSEAL | 72 71 70 - 68 - - 65 - 63 - 61 - 59 58 - 56 - - 53<br>- - - 49 - - - - - 43 - 41 40 39 38 - 36 - - -<br>- 31 30 29 - - - 25 24 23 22 21 20 - - -<br>- - - - - - - - - - 6 5 4 3 2 1 | SALEABLE | | 345650003 |
| MX123 CONN ASSY 73 CKT GRY OPT0 KEY B/24 | 345667363 | C-HSG-B0 | G-CAP-0-P | TPA-B0 | RS | LS | MAL | CPA | MSEAL | RSEAL | - 71 - 69 - 67 66 65 64 63 - - - - 58 57 56 - 54 53<br>- 51 50 49 48 47 - 45 - - 42 - - 39 38 37 36 35 34 33<br>- 32 31 30 29 28 27 26 25 24 23 22 21 - - - -<br>- - - 13 12 11 10 9 - 7 6 5 - 3 2 1 | SALEABLE | | 345650003 |
| MX123 CONN ASSY 73 CKT BLK OPT0 KEY A/52 | 345667373 | C-HSG-A0 | G-CAP-0-P | TPA-A0 | RS | LS | MAL | CPA | MSEAL | RSEAL | - - - - - 67 - - - 63 62 - - 59 58 - - 55 - -<br>- - - - - 47 - - - - - 41 - - - - - 35 - -<br>- 32 - - - - 27 - - 24 - - - - 19 18 17<br>- 16 - - - - 11 10 - 8 - - - - 3 - 1 | SALEABLE | | 345650003 |

| ASSEMBLY DESCRIPTION | ASSEMBLY PART NUMBER | CONNECTOR HOUSING | GROMMET CAP | TPA | RIGHT SLIDE | LEFT SLIDE | MATE ASSIST LEVER | CPA | MAT SEAL | RING SEAL | BLOCKED TERMINALS<br>CAVITY WITH A NUMBER INDICATES BLOCKED TERMINAL POSITION<br>CAVITY WITHOUT A NUMBER INDICATES OPEN TERMINAL POSITION | STATUS | COMMENTS | INTEGRAL COMPONENTS SOLD SEPARATELY<br>DRESS COVER |
|---|---|---|---|---|---|---|---|---|---|---|---|---|---|---|
| MX123 CONN ASSY 73 CKT BLU OPT0 KEY C/38 | 345667383 | C-HSG-C0 | G-CAP-0-P | TPA-C0 | RS | LS | MAL | CPA | MSEAL | RSEAL | 72 - - 69 68 - - - - 63 62 - - 59 58 - 56 55 - 53<br>- - - - - - 46 - - 43 42 - 40 39 38 - 36 35 - -<br>- - 31 30 29 - - 26 - 24 23 22 21 20 19 18 -<br>- - - - - - - - - - 6 5 4 3 2 1 | SALEABLE | | 345650003 |
| MX123 CONN ASSY 73 CKT GRY OPT0 KEY B/19 | 345667393 | C-HSG-B0 | G-CAP-0-P | TPA-B0 | RS | LS | MAL | CPA | MSEAL | RSEAL | - 71 70 69 68 67 66 65 64 63 - - 60 59 58 57 56 - 54 53<br>- 51 50 49 - - - 45 - - 42 41 - 39 38 37 36 35 34 33<br>32 31 30 29 28 27 26 25 24 23 22 21 - - - 17<br>- - - 13 12 11 10 9 8 7 6 5 - 3 2 1 | SALEABLE | | 345650003 |
| MX123 CONN ASSY 73 CKT GRY OPT0 KEY B/52 | 345667403 | C-HSG-B0 | G-CAP-0-P | TPA-B0 | RS | LS | MAL | CPA | MSEAL | RSEAL | 72 71 70 69 68 67 66 65 64 63 62 61 60 - 58 - 56 - 54 -<br>52 51 - - - 47 - 45 44 43 42 41 40 - 38 - 36 - 34 -<br>32 31 30 - 28 27 26 25 24 - 22 - 20 19 18 17<br>16 - 14 13 12 11 10 9 8 - - - - - 2 1 | SALEABLE | | 345650003 |
| MX123 CONN ASSY 73 CKT BLK OPT0 KEY A/53 | 345667413 | C-HSG-A0 | G-CAP-0-P | TPA-A0 | RS | LS | MAL | CPA | MSEAL | RSEAL | - - - - - 67 - - - - 62 - - 59 58 - - 55 - -<br>52 - - - - 47 - - - - - 41 - - - - - 35 - -<br>- - - - - 27 - - 24 - - - - 19 18 17<br>16 - - - - 11 10 - 8 - - - - 3 - 1 | SALEABLE | | 345650003 |
| MX123 CONN ASSY 73 CKT BLU OPT0 KEY C/38 | 345667423 | C-HSG-C0 | G-CAP-0-P | TPA-C0 | RS | LS | MAL | CPA | MSEAL | RSEAL | 72 71 - - 68 - 66 65 - 63 62 - - 59 58 - 56 55 - 53<br>- - - - - - - - - 43 42 - 40 39 38 - 36 35 - -<br>- 31 30 29 - - 26 - 24 23 22 21 20 19 - -<br>- - - - - - - - - - 6 5 4 3 2 1 | SALEABLE | | 345650003 |
| MX123 CONN ASSY 73 CKT GRY OPT0 KEY B/31 | 345667433 | C-HSG-B0 | G-CAP-0-P | TPA-B0 | RS | LS | MAL | CPA | MSEAL | RSEAL | - 71 70 69 - 67 66 65 64 63 - - - - 58 57 56 - 54 53<br>- 51 50 49 - - - 45 - - 42 - - 39 - - - - 34 33<br>32 31 - 29 28 27 26 25 24 23 22 21 - - - -<br>- - - 13 12 11 10 9 - 7 6 5 - 3 2 - | SALEABLE | | 345650003 |
| MX123 CONN ASSY 73 CKT BLK OPT0 KEY A/50 | 345667443 | C-HSG-A0 | G-CAP-0-P | TPA-A0 | RS | LS | MAL | CPA | MSEAL | RSEAL | - - - - - 67 - - - - 62 61 - 59 58 - - 55 - 53<br>- - - - - 47 - - - - - 41 - - - - - 35 - 33<br>32 - - - - 27 - - 24 - - - - 19 18 17<br>16 - - - - 11 10 - 8 - - - - 3 - 1 | SALEABLE | | 345650003 |
| MX123 CONN ASSY 73 CKT BLU OPT0 KEY C/41 | 345667453 | C-HSG-C0 | G-CAP-0-P | TPA-C0 | RS | LS | MAL | CPA | MSEAL | RSEAL | 72 - - 69 68 - - - - 63 62 - - 59 - - 56 55 - 53<br>- - - - - - 46 - - 43 42 - 40 39 - - 36 35 - -<br>- 31 30 29 - - 26 - 24 23 22 21 20 19 - -<br>- - - - - - - - - - 6 5 4 3 2 1 | SALEABLE | | 345650003 |
| MX123 CONN ASSY 73 CKT GRY OPT0 KEY B/25 | 345667463 | C-HSG-B0 | G-CAP-0-P | TPA-B0 | RS | LS | MAL | CPA | MSEAL | RSEAL | - 71 70 69 - 67 66 65 64 63 - - 60 59 58 57 56 - 54 53<br>- 51 50 49 - - - 45 44 - 42 41 - 39 38 37 36 35 34 33<br>32 31 - 29 28 27 26 25 24 23 - - - - - 17<br>- - - 13 12 11 10 9 - 7 - 5 - 3 - 1 | SALEABLE | | 345650003 |
| MX123 CONN ASSY 73 CKT GRY OPT0 KEY B/27 | 345667473 | C-HSG-B0 | G-CAP-0-P | TPA-B0 | RS | LS | MAL | CPA | MSEAL | RSEAL | - 71 70 69 - - 66 65 64 - - - 60 59 58 57 56 - 54 53<br>- 51 50 49 - - - 45 44 - 42 41 - 39 38 37 36 35 34 33<br>32 31 - 29 28 - 26 25 24 23 - - - - - 17<br>- 15 - 13 12 - 10 9 - 7 - 5 - 3 2 1 | SALEABLE | | 345650003 |
| MX123 CONN ASSY 73 CKT GRY OPT0 KEY B/26 | 345667483 | C-HSG-B0 | G-CAP-0-P | TPA-B0 | RS | LS | MAL | CPA | MSEAL | RSEAL | - 71 70 69 - 67 66 65 64 63 - - 60 59 58 57 56 - 54 53<br>- 51 50 49 - - - 45 44 - 42 41 - 39 38 37 36 35 34 33<br>32 31 - 29 28 27 26 25 24 23 - - - - - -<br>- - - 13 12 11 10 9 - 7 - 5 - 3 - 1 | SALEABLE | | 345650003 |
| MX123 CONN ASSY 73 CKT BLU OPT0 KEY C/39 | 345667493 | C-HSG-C0 | G-CAP-0-P | TPA-C0 | RS | LS | MAL | CPA | MSEAL | RSEAL | 72 71 70 - 68 - 66 65 - 63 - 61 - 59 58 - 56 - - 53<br>- - - 49 - - - - - 43 - 41 40 39 38 - 36 - - -<br>- 31 30 29 - - - 25 24 23 22 21 20 - - -<br>- - - - - - - - - - 6 5 4 3 2 1 | SALEABLE | | 345650003 |

| ASSEMBLY DESCRIPTION | ASSEMBLY PART NUMBER | CONNECTOR HOUSING | GROMMET CAP | TPA | RIGHT SLIDE | LEFT SLIDE | MATE ASSIST LEVER | CPA | MAT SEAL | RING SEAL | BLOCKED TERMINALS<br>CAVITY WITH A NUMBER INDICATES BLOCKED TERMINAL POSITION<br>CAVITY WITHOUT A NUMBER INDICATES OPEN TERMINAL POSITION | STATUS | COMMENTS | INTEGRAL COMPONENTS SOLD SEPARATELY<br>DRESS COVER |
|---|---|---|---|---|---|---|---|---|---|---|---|---|---|---|
| MX123 CONN ASSY 73 CKT BLK OPT0 KEY A/8 | 345667503 | C-HSG-A0 | G-CAP-0-P | TPA-A0 | RS | LS | MAL | CPA | MSEAL | RSEAL | - - - - - - - 65 - - - 61 - - - - - - - -<br>- - - - - - - 45 - - - 41 - - - - - - - -<br>-<br>- - - - - - 26 25 - - - - - - - -<br>- - - - - - 10 - - - - - - - - - | SALEABLE | | 345650003 |
| MX123 CONN ASSY 73 CKT BLK OPT9 KEY A/50 | 345667513 | C-HSG-A9 | G-CAP-9-P | TPA-A9 | RS | LS | MAL | CPA | MSEAL | RSEAL | - - - - - 67 - - - - 62 - - 59 58 - - 55 - -<br>- - - - - 47 - - - - 42 41 - - - - - 35 - -<br>-<br>- - - - - 27 26 25 24 - - - - 19 18 17<br>16 - - - - 11 10 9 8 - - - - 3 - 1 | SALEABLE | | 345650003 |
| MX123 CONN ASSY 73 CKT BLK OPT0 KEY A/37 | 345667523 | C-HSG-A0 | G-CAP-0-P | TPA-A0 | RS | LS | MAL | CPA | MSEAL | RSEAL | - 71 70 69 68 67 66 65 - 63 - - 60 - - - - - - 53<br>- - 50 49 - - - - 44 - 42 - - 39 38 - 36 35 34 -<br>-<br>- 31 - - 28 - - - - 23 22 21 - 19 18 17<br>- - 14 - 12 - - - 8 7 6 5 - 3 2 1 | SALEABLE | | 345650003 |
| MX123 CONN ASSY 73 CKT BLK OPT0 KEY A/1 | 345667543 | C-HSG-A0 | G-CAP-0-P | TPA-A0 | RS | LS | MAL | CPA | MSEAL | RSEAL | 72 71 70 69 68 67 66 65 64 63 62 61 60 59 58 57 56 55 54 53<br>52 51 50 49 48 47 46 45 44 43 42 41 40 39 38 37 36 35 34 33<br>-<br>32 31 30 29 28 27 26 25 24 23 22 21 20 19 18 17<br>16 15 14 13 12 11 10 9 8 7 6 5 4 3 2 1 | SALEABLE | | 345650003 |
| MX123 CONN ASSY 73 CKT GRY OPT0 KEY B/1 | 345667553 | C-HSG-B0 | G-CAP-0-P | TPA-B0 | RS | LS | MAL | CPA | MSEAL | RSEAL | 72 71 70 69 68 67 66 65 64 63 62 61 60 59 58 57 56 55 54 53<br>52 51 50 49 48 47 46 45 44 43 42 41 40 39 38 37 36 35 34 33<br>-<br>32 31 30 29 28 27 26 25 24 23 22 21 20 19 18 17<br>16 15 14 13 12 11 10 9 8 7 6 5 4 3 2 1 | SALEABLE | | 345650003 |
| MX123 CONN ASSY 73 CKT BLU OPT0 KEY C/1 | 345667563 | C-HSG-C0 | G-CAP-0-P | TPA-C0 | RS | LS | MAL | CPA | MSEAL | RSEAL | 72 71 70 69 68 67 66 65 64 63 62 61 60 59 58 57 56 55 54 53<br>52 51 50 49 48 47 46 45 44 43 42 41 40 39 38 37 36 35 34 33<br>-<br>32 31 30 29 28 27 26 25 24 23 22 21 20 19 18 17<br>16 15 14 13 12 11 10 9 8 7 6 5 4 3 2 1 | SALEABLE | | 345650003 |
| MX123 CONN ASSY 73 CKT GRY OPT0 KEY B/27 | 345667573 | C-HSG-B0 | G-CAP-0-P | TPA-B0 | RS | LS | MAL | CPA | MSEAL | RSEAL | - 71 - 69 - 67 66 65 64 63 - - 60 59 58 57 56 - 54 53<br>- 51 50 49 - - - 45 44 - 42 41 - 39 38 37 36 35 34 33<br>-<br>32 31 - 29 28 27 26 25 24 23 - - - - - -<br>- - - 13 12 11 10 9 - 7 - 5 - 3 - 1 | SALEABLE | | 345650003 |
| MX123 CONN ASSY 73 CKT BLK OPT9 KEY A/37 | 345667583 | C-HSG-A9 | G-CAP-9-P | TPA-A9 | RS | LS | MAL | CPA | MSEAL | RSEAL | - 71 - 69 68 - 66 65 64 - 62 61 - - - - 56 55 54 53<br>- 51 50 49 - - - 45 44 - - 41 - - - - 36 35 34 33<br>-<br>- - - - - - 26 25 24 23 - - 20 19 18 17<br>- - - - - - 10 - 8 - 6 5 4 3 - - | SALEABLE | | 345650003 |
| MX123 CONN ASSY 73 CKT BLK OPT9 KEY A/52 | 345667593 | C-HSG-A9 | G-CAP-9-P | TPA-A9 | RS | LS | MAL | CPA | MSEAL | RSEAL | - 71 - - - 67 66 65 - 63 - - 60 - - - - - - -<br>- - - 49 - - - - 44 - 42 - - 39 38 - 36 - 34 -<br>-<br>- 31 - - 28 - - - - 23 22 21 - - - 17<br>- - - - - - - - - 7 6 - - - - - | SALEABLE | | 345650003 |
| MX123 CONN ASSY 73 CKT GRY OPT0 KEY B/48 | 345667603 | C-HSG-B0 | G-CAP-0-P | TPA-B0 | RS | LS | MAL | CPA | MSEAL | RSEAL | 72 71 70 - - 67 - 65 64 63 62 61 60 - 58 - 56 - 54 -<br>52 51 50 - - 47 - 45 - 43 42 41 40 - 38 - 36 - 34 -<br>-<br>32 31 30 - - 27 26 25 24 - 22 - 20 19 - -<br>16 15 14 13 - - - 9 8 - 6 5 4 3 2 1 | SALEABLE | | 345650003 |
| MX123 CONN ASSY 73 CKT BLK OPT9 KEY A/64 | 345667633 | C-HSG-A9 | G-CAP-9-P | TPA-A9 | RS | LS | MAL | CPA | MSEAL | RSEAL | - - - - - - - - - - 62 61 - - - - - - - 53<br>- - - - - - - - - - - - - - - - - - - 33<br>-<br>- - - - - - - - 24 - - - - 19 - -<br>- - - - - - 10 - 8 - - - - 3 - - | SALEABLE | | 345650003 |
| MX123 CONN ASSY 73 CKT GRY OPT9 KEY B/21 | 345667643 | C-HSG-B9 | G-CAP-9-P | TPA-B9 | RS | LS | MAL | CPA | MSEAL | RSEAL | 72 71 70 69 - - 66 65 - 63 62 61 60 - - 57 56 55 54 53<br>52 51 50 49 48 47 - - 44 43 42 41 40 - - 37 36 35 34 33<br>-<br>- 31 - - - - 26 25 24 - - 21 20 19 18 -<br>16 15 14 13 12 11 - 9 8 - 6 5 4 3 2 - | SALEABLE | | 345650003 |

| ASSEMBLY DESCRIPTION | ASSEMBLY PART NUMBER | CONNECTOR HOUSING | GROMMET CAP | TPA | RIGHT SLIDE | LEFT SLIDE | MATE ASSIST LEVER | CPA | MAT SEAL | RING SEAL | BLOCKED TERMINALS<br>CAVITY WITH A NUMBER INDICATES BLOCKED TERMINAL POSITION<br>CAVITY WITHOUT A NUMBER INDICATES OPEN TERMINAL POSITION | STATUS | COMMENTS | INTEGRAL COMPONENTS SOLD SEPARATELY<br>DRESS COVER |
|---|---|---|---|---|---|---|---|---|---|---|---|---|---|---|
| MX123 CONN ASSY 73 CKT GRY OPT0 KEY B/24 | 345667653 | C-HSG-B0 | G-CAP-0-P | TPA-B0 | RS | LS | MAL | CPA | MSEAL | RSEAL | - 71 - 69 68 67 66 65 64 63 - - 60 59 58 57 56 - 54 53<br>- 51 50 49 - - - 45 44 - 42 41 - 39 38 37 36 35 34 33<br>- 32 31 - 29 28 27 26 25 24 23 - - - - - 17<br>- - - 13 12 11 10 9 8 7 - 5 - 3 - 1 | SALEABLE | | 345650003 |
| MX123 CONN ASSY 73 CKT GRY OPT0 KEY B/36 | 345667663 | C-HSG-B0 | G-CAP-0-P | TPA-B0 | RS | LS | MAL | CPA | MSEAL | RSEAL | - 71 - 69 - 67 66 65 64 63 - - - - 58 57 56 - 54 53<br>- 51 50 49 - - - 45 - - 42 - - 39 - - - - 34 -<br>- 32 31 - 29 28 27 26 25 24 23 - - - - - -<br>- - - 13 12 11 10 9 - 7 - 5 - 3 2 - | SALEABLE | | 345650003 |
| MX123 CONN ASSY 73 CKT BLU OPT0 KEY C/46 | 345667673 | C-HSG-C0 | G-CAP-0-P | TPA-C0 | RS | LS | MAL | CPA | MSEAL | RSEAL | 72 - - - 68 - - - - 63 62 - - - - - 56 55 - 53<br>- - - - - - - - - 43 42 - 40 - - - 36 35 - -<br>- - 31 30 29 - - 26 - 24 - 22 21 20 19 - -<br>- - - - - - - - - - - 6 5 4 3 2 1 | SALEABLE | | 345650003 |
| MX123 CONN ASSY 73 CKT GRY OPT9 KEY B/67 | 345667683 | C-HSG-B9 | G-CAP-9-P | TPA-B9 | RS | LS | MAL | CPA | MSEAL | RSEAL | - - - - - - - - - - - - - - - 58 - - - 54 53<br>- - - - - - - - - - 42 - - - - - - - - - -<br>- - - - - 27 - - - - - - - - - - -<br>- - - - - - 10 - - - - - - - - - - | SALEABLE | | 345650003 |
| MX123 CONN ASSY 73 CKT BLK OPT9 KEY A/31 | 345667693 | C-HSG-A9 | G-CAP-9-P | TPA-A9 | RS | LS | MAL | CPA | MSEAL | RSEAL | - 71 70 69 68 67 66 65 - 63 - - 60 59 58 - - - - 53<br>- - 50 49 48 47 - - 44 - 42 41 - 39 38 - 36 - - 33<br>- 31 - - 28 - 26 - 24 23 22 21 - 19 18 17<br>- - 14 - 12 - - - 8 7 6 5 - 3 2 1 | SALEABLE | | 345650003 |
| MX123 CONN ASSY 73 CKT BLK OPT0 KEY A/26 | 345667703 | C-HSG-A0 | G-CAP-0-P | TPA-A0 | RS | LS | MAL | CPA | MSEAL | RSEAL | - - - - - - - 65 - - - 61 - - 58 57 56 - - -<br>- 51 50 - - 47 46 45 - - - 41 - - 38 37 36 - - -<br>- 31 30 - 28 - 26 25 - - 22 21 20 - - -<br>- 15 14 - - - 10 - - - - - - - - - | SALEABLE | | 345650003 |
| MX123 CONN ASSY 73 CKT BLK OPT9 KEY A/35 | 345667713 | C-HSG-A9 | G-CAP-9-P | TPA-A9 | RS | LS | MAL | CPA | MSEAL | RSEAL | - 71 70 69 68 67 66 65 - 63 - - 60 59 - - - - - 53<br>- - 50 49 - 47 - - 44 - 42 - - 39 38 - 36 - - 33<br>- 31 - - 28 - 26 - 24 23 22 21 - 19 18 17<br>- - 14 - 12 - - - 8 7 6 5 - - 2 1 | SALEABLE | | 345650003 |
| MX123 CONN ASSY 73 CKT BLK OPT9 KEY A/30 | 345667723 | C-HSG-A9 | G-CAP-9-P | TPA-A9 | RS | LS | MAL | CPA | MSEAL | RSEAL | - 71 70 69 68 67 66 65 - 63 - - 60 59 58 - - - - -<br>- - 50 49 48 47 - - 44 - 42 41 - 39 38 - 36 35 34 33<br>- 31 - - 28 - 26 - 24 23 22 21 - 19 18 17<br>- - 14 - 12 - - - 8 7 6 5 - 3 2 1 | SALEABLE | | 345650003 |
| MX123 CONN ASSY 73 CKT BLK OPT9 KEY A/34 | 345667733 | C-HSG-A9 | G-CAP-9-P | TPA-A9 | RS | LS | MAL | CPA | MSEAL | RSEAL | - 71 70 69 68 67 66 65 - 63 - - 60 59 - - - - - -<br>- - 50 49 - 47 - - 44 - 42 - - 39 38 - 36 35 34 33<br>- 31 - - 28 - 26 - 24 23 22 21 - 19 18 17<br>- - 14 - 12 - - - 8 7 6 5 - - 2 1 | SALEABLE | | 345650003 |
| MX123 CONN ASSY 73 CKT BLU OPT0 KEY C/45 | 345667743 | C-HSG-C0 | G-CAP-0-P | TPA-C0 | RS | LS | MAL | CPA | MSEAL | RSEAL | - 71 - 69 - - - 65 64 - - 61 60 - 58 - 56 55 54 -<br>- - 50 - - - - 45 - 43 42 - - - 38 - - - - -<br>- 31 - 29 28 - - - - 23 - - - 19 18 17<br>16 - - - 12 11 - - - 7 - - - 3 - 1 | SALEABLE | | 345650003 |
| MX123 CONN ASSY 73 CKT BLK OPT0 KEY A/51 | 345667753 | C-HSG-A0 | G-CAP-0-P | TPA-A0 | RS | LS | MAL | CPA | MSEAL | RSEAL | 72 - - - - - 66 65 - - - - - - - - - - - -<br>- - - - 48 47 46 - - - - - 40 - - - - 35 - 33<br>- - - 30 - - - - - 24 23 22 21 20 - - 17<br>- - - - - - - - - 7 6 5 4 - 2 1 | SALEABLE | | 345650003 |
| MX123 CONN ASSY 73 CKT NAT OPT0 KEY F/1 | 345667763 | C-HSG-F0 | G-CAP-0-P | TPA-F0 | RS | LS | MAL | CPA | MSEAL | RSEAL | 72 71 70 69 68 67 66 65 64 63 62 61 60 59 58 57 56 55 54 53<br>52 51 50 49 48 47 46 45 44 43 42 41 40 39 38 37 36 35 34 33<br>32 31 30 29 28 27 26 25 24 23 22 21 20 19 18 17<br>16 15 14 13 12 11 10 9 8 7 6 5 4 3 2 1 | SALEABLE | | 345650003 |

| ASSEMBLY DESCRIPTION | ASSEMBLY PART NUMBER | CONNECTOR HOUSING | GROMMET CAP | TPA | RIGHT SLIDE | LEFT SLIDE | MATE ASSIST LEVER | CPA | MAT SEAL | RING SEAL | BLOCKED TERMINALS<br>CAVITY WITH A NUMBER INDICATES BLOCKED TERMINAL POSITION<br>CAVITY WITHOUT A NUMBER INDICATES OPEN TERMINAL POSITION | STATUS | COMMENTS | INTEGRAL COMPONENTS SOLD SEPARATELY<br>DRESS COVER |
|---|---|---|---|---|---|---|---|---|---|---|---|---|---|---|
| MX123 CONN ASSY 73 CKT GRY OPT0 KEY B/25 | 345667773 | C-HSG-B0 | G-CAP-0-P | TPA-B0 | RS | LS | MAL | CPA | MSEAL | RSEAL | - 71 - 69 68 - 66 65 64 - - - - - 58 57 56 55 54 53<br>- 51 50 49 48 47 - 45 44 - 42 - - 39 38 37 36 35 34 33<br>- 32 31 30 29 28 - 26 25 24 23 - - - - - 17<br>- 15 - 13 12 - 10 9 8 7 - 5 - 3 2 1 | SALEABLE | | 345650003 |
| MX123 CONN ASSY 73 CKT BLK OPT0 KEY A/51 | 345667783 | C-HSG-A0 | G-CAP-0-P | TPA-A0 | RS | LS | MAL | CPA | MSEAL | RSEAL | - - - - - 67 - - - - 62 61 - 59 58 - - 55 - 53<br>- - - - - 47 - - - - - - - - - - 35 - 33<br>- - - - - - - - 27 - - 24 - - - 20 19 18 17<br>16 - - - - 11 10 - 8 - - - 4 3 - - | SALEABLE | | 345650003 |
| MX123 CONN ASSY 73 CKT BLK OPT0 KEY A/40 | 345667793 | C-HSG-A0 | G-CAP-0-P | TPA-A0 | RS | LS | MAL | CPA | MSEAL | RSEAL | - 71 - 69 68 - - - 64 - 62 61 - - - - - - 54 53<br>- - 50 - - - - - 44 - - 41 - - - - - - 34 33<br>- 32 31 30 29 - - 26 25 24 - - - 20 19 - -<br>16 15 14 13 - - 10 - 8 7 6 5 4 3 - - | SALEABLE | | 345650003 |
| MX123 CONN ASSY 73 CKT BLK OPT0 KEY A/26 | 345667803 | C-HSG-A0 | G-CAP-0-P | TPA-A0 | RS | LS | MAL | CPA | MSEAL | RSEAL | - - - 69 - 67 - 65 - - - - - - 58 57 56 - - -<br>- 51 50 - - 47 - 45 - - - 41 - - 38 37 36 - - -<br>- - 31 30 - - - 26 25 - - 22 21 20 - - -<br>- 15 - - - - 10 - - - - 5 4 - - - | SALEABLE | | 345650003 |
| MX123 CONN ASSY 73 CKT BLK OPT0 KEY A/50 | 345667813 | C-HSG-A0 | G-CAP-0-P | TPA-A0 | RS | LS | MAL | CPA | MSEAL | RSEAL | 72 71 - - - - 66 65 64 - - - - - - - - - - -<br>- - - - 48 47 46 45 - - - - - - - - - 35 - 33<br>- - 31 30 - - - - - 24 23 22 - 20 - - 17<br>- - - - - - - - - 7 6 - 4 - 2 1 | SALEABLE | | 345650003 |
| MX123 CONN ASSY 73 CKT GRY OPT0 KEY B/32 | 345667823 | C-HSG-B0 | G-CAP-0-P | TPA-B0 | RS | LS | MAL | CPA | MSEAL | RSEAL | - 71 70 69 - - 66 65 64 - - - - - 58 57 56 55 54 53<br>- 51 50 49 - - - 45 - - 42 - - 39 - - - - 34 33<br>- 32 31 - 29 28 - 26 25 24 23 22 21 - - - - 17<br>- 15 - 13 12 - 10 9 - 7 6 5 - 3 2 - | SALEABLE | | 345650003 |
| MX123 CONN ASSY 73 CKT GRY OPT0 KEY B/64 | 345667833 | C-HSG-B0 | G-CAP-0-P | TPA-B0 | RS | LS | MAL | CPA | MSEAL | RSEAL | - - - - - - - - - - 62 - - - 58 - - - 54 53<br>- - - - - - - - - - 42 - - - - - - - - -<br>- - - - - 27 - - - - - - - - - -<br>- - - - - 11 10 9 - - - - - - - - | SALEABLE | | 345650003 |
| MX123 CONN ASSY 73 CKT BLU OPT9 KEY C/38 | 345667843 | C-HSG-C9 | G-CAP-9-P | TPA-C9 | RS | LS | MAL | CPA | MSEAL | RSEAL | 72 - 70 69 68 - 66 - - 63 - - - 59 - - 56 55 - 53<br>- - - - - - 46 - - 43 - - 40 39 - - 36 35 - -<br>- 32 31 30 29 - - - - 24 23 22 21 20 19 - 17<br>- - - - - - - - 8 7 6 5 4 3 2 1 | SALEABLE | | 345650003 |
| MX123 CONN ASSY 73 CKT BLU OPT9 KEY C/41 | 345667853 | C-HSG-C9 | G-CAP-9-P | TPA-C9 | RS | LS | MAL | CPA | MSEAL | RSEAL | - - - - 68 - - 65 - 63 62 61 60 59 58 57 56 55 - 53<br>- - - - 48 - - 45 - 43 42 41 40 - - 37 36 35 34 33<br>- 32 31 - - - - - - - - - - 20 19 18 -<br>- - - - - - - - - - - - 4 3 2 1 | SALEABLE | | 345650003 |
| MX123 CONN ASSY 73 CKT BLU OPT9 KEY C/41 | 345667863 | C-HSG-C9 | G-CAP-9-P | TPA-C9 | RS | LS | MAL | CPA | MSEAL | RSEAL | - 71 - 69 - - - 65 64 - - 61 60 - 58 - 56 55 54 -<br>- - 50 49 - - - 45 - 43 42 41 - - 38 - - - - -<br>- 31 - 29 28 - - - - 23 - - 20 19 18 17<br>16 - - 13 12 11 - - - 7 - - - 3 - 1 | SALEABLE | | 345650003 |
| MX123 CONN ASSY 73 CKT BLK OPT9 KEY A/29 | 345667873 | C-HSG-A9 | G-CAP-9-P | TPA-A9 | RS | LS | MAL | CPA | MSEAL | RSEAL | 72 - 70 - 68 67 66 - - 63 62 - - 59 - 57 - - - 53<br>52 51 - 49 48 47 46 - 44 - - 41 40 39 - 37 36 - 34 33<br>- 32 - 30 - - 27 26 25 24 - 22 21 20 - - -<br>- 15 14 13 - - 10 9 8 7 6 5 4 - 2 - | SALEABLE | | 345650003 |
| MX123 CONN ASSY 73 CKT BLK OPT9 KEY A/30 | 345667883 | C-HSG-A9 | G-CAP-9-P | TPA-A9 | RS | LS | MAL | CPA | MSEAL | RSEAL | - 71 70 69 - - - - 64 63 62 61 60 59 58 57 56 55 54 53<br>52 51 50 49 - - 46 45 44 43 42 41 - 39 - 37 36 - 34 -<br>- 32 - - 29 28 27 26 - - - - - - - 18 -<br>- 16 15 14 13 12 11 10 - - - - - - - 3 - - | SALEABLE | | 345650003 |

| ASSEMBLY DESCRIPTION | ASSEMBLY PART NUMBER | CONNECTOR HOUSING | GROMMET CAP | TPA | RIGHT SLIDE | LEFT SLIDE | MATE ASSIST LEVER | CPA | MAT SEAL | RING SEAL | BLOCKED TERMINALS<br>CAVITY WITH A NUMBER INDICATES BLOCKED TERMINAL POSITION<br>CAVITY WITHOUT A NUMBER INDICATES OPEN TERMINAL POSITION | STATUS | COMMENTS | INTEGRAL COMPONENTS SOLD SEPARATELY<br>DRESS COVER |
|---|---|---|---|---|---|---|---|---|---|---|---|---|---|---|
| MX123 CONN ASSY 73 CKT BLK OPT9 KEY A/51 | 345667893 | C-HSG-A9 | G-CAP-9-P | TPA-A9 | RS | LS | MAL | CPA | MSEAL | RSEAL | - - - - - 67 - - - - 62 - - 59 58 - - 55 - -<br>- - - - - 47 - - - - - 41 - - - - - 35 - -<br>- - - - - - - - 27 26 25 24 - - - - 19 18 17<br>16 - - - - 11 10 9 8 - - - - 3 - 1 | SALEABLE | | 345650003 |
| MX123 CONN ASSY 73 CKT GRY OPT0 KEY B/39 | 345667903 | C-HSG-B0 | G-CAP-0-P | TPA-B0 | RS | LS | MAL | CPA | MSEAL | RSEAL | 72 71 70 69 68 67 66 65 - 63 62 - 60 - 58 - 56 - 54 -<br>52 51 50 49 48 47 46 45 44 43 - 41 40 - 38 37 36 - 34 -<br>- 32 31 30 29 28 27 26 25 24 - 22 21 - - 18 17<br>16 - 14 13 12 11 10 9 8 7 6 5 - - - - | SALEABLE | | 345650003 |
| MX123 CONN ASSY 73 CKT BLU OPT0 KEY C/37 | 345667923 | C-HSG-C0 | G-CAP-0-P | TPA-C0 | RS | LS | MAL | CPA | MSEAL | RSEAL | 72 - - 69 68 - 66 65 - 63 62 - - 59 58 - 56 55 - 53<br>- - - - - - 46 - - 43 42 - 40 39 38 - 36 35 - -<br>- - 31 30 29 - - 26 - 24 23 22 21 20 19 - -<br>- - - - - - - - - - 6 5 4 3 2 1 | SALEABLE | | 345650003 |
| MX123 CONN ASSY 73 CKT BLK OPT0 KEY A/50 | 345667933 | C-HSG-A0 | G-CAP-0-P | TPA-A0 | RS | LS | MAL | CPA | MSEAL | RSEAL | - - - - - 67 - - - - 62 - - 59 58 - - 55 - -<br>- - - - - 47 - - - - 42 41 - - - - - 35 - -<br>- - - - - 27 26 25 24 - - - - 19 18 17<br>16 - - - - 11 10 9 8 - - - - 3 - 1 | SALEABLE | | 345650003 |
| MX123 CONN ASSY 73 CKT GRY OPT0 KEY B/32 | 345667943 | C-HSG-B0 | G-CAP-0-P | TPA-B0 | RS | LS | MAL | CPA | MSEAL | RSEAL | - 71 70 69 68 67 66 65 64 63 - - - - 58 57 56 - 54 53<br>- 51 50 49 - - - 45 44 - 42 - - 39 - - - - 34 33<br>- 32 - - 29 28 27 26 25 24 23 - - - - - -<br>- - - 13 12 11 10 9 8 7 - 5 - 3 2 - | SALEABLE | | 345650003 |
| MX123 CONN ASSY 73 CKT GRY OPT0 KEY B/32 | 345667953 | C-HSG-B0 | G-CAP-0-P | TPA-B0 | RS | LS | MAL | CPA | MSEAL | RSEAL | - 71 70 69 68 67 66 65 64 63 - - - - 58 57 56 - 54 53<br>- 51 50 49 - - - 45 44 - 42 - - 39 - - - - 34 33<br>- 32 - - 29 28 27 26 25 24 23 - - - - - -<br>- - - 13 12 11 10 9 8 7 - 5 - 3 - 1 | SALEABLE | | 345650003 |
| MX123 CONN ASSY 73 CKT BLK OPT9 KEY A/54 | 345667963 | C-HSG-A9 | G-CAP-9-P | TPA-A9 | RS | LS | MAL | CPA | MSEAL | RSEAL | - - - - - 67 - - - - 62 - - 59 58 - - 55 - -<br>- - - - - 47 - - - - - 41 - - - - - 35 - -<br>- - - - - 27 - - 24 - - - - 19 18 17<br>16 - - - - 11 10 - 8 - - - - 3 - 1 | SALEABLE | | 345650003 |
| MX123 CONN ASSY 73 CKT GRY OPT9 KEY B/36 | 345667973 | C-HSG-B9 | G-CAP-9-P | TPA-B9 | RS | LS | MAL | CPA | MSEAL | RSEAL | - 71 70 69 68 67 66 65 64 63 - - - - 58 57 56 - 54 53<br>- 51 - - - - - - 44 - 42 - - 39 - - - - - 33<br>- 32 31 - - 28 27 26 25 24 23 - - - - - -<br>- - - 13 12 11 10 9 8 7 - 5 - 3 2 - | SALEABLE | | 345650003 |
| MX123 CONN ASSY 73 CKT GRY OPT9 KEY B/32 | 345667983 | C-HSG-B9 | G-CAP-9-P | TPA-B9 | RS | LS | MAL | CPA | MSEAL | RSEAL | - 71 70 69 68 67 66 65 64 63 - - - - 58 57 56 - 54 53<br>- 51 - - - - - - 44 - 42 - - 39 38 37 36 35 - -<br>- 32 31 - - 28 27 26 25 24 23 - - - - - -<br>- - - 13 12 11 10 9 8 7 - 5 - 3 2 1 | SALEABLE | | 345650003 |
| MX123 CONN ASSY 73 CKT BLU OPT9 KEY C/39 | 345667993 | C-HSG-C9 | G-CAP-9-P | TPA-C9 | RS | LS | MAL | CPA | MSEAL | RSEAL | 72 71 - - 68 - - 65 - 63 62 - - 59 58 - 56 55 - 53<br>- - - - - - - - - 43 42 - 40 39 38 - 36 35 - -<br>- - 31 30 29 - - 26 - 24 23 22 21 20 19 - -<br>- - - - - - - - - - 6 5 4 3 2 1 | SALEABLE | | 345650003 |
| MX123 CONN ASSY 73 CKT BLK OPT0 KEY A/33 | 345668003 | C-HSG-A0 | G-CAP-0-P | TPA-A0 | RS | LS | MAL | CPA | MSEAL | RSEAL | 72 71 70 - - 67 66 - - - 62 - - - - 57 - 55 54 53<br>- 51 - - - - 46 45 44 43 42 - 40 39 - - - 35 - -<br>- - - - - - 26 25 - - 22 21 - - - -<br>- 15 14 - - - - - 8 7 6 5 4 3 2 - | SALEABLE | | 345650003 |
| MX123 CONN ASSY 73 CKT BLU OPT9 KEY C/38 | 345668013 | C-HSG-C9 | G-CAP-9-P | TPA-C9 | RS | LS | MAL | CPA | MSEAL | RSEAL | 72 - 70 69 68 - 66 - - 63 62 - - - 58 - 56 55 - 53<br>- - - 49 - - 46 - - 43 42 - 40 - 38 - 36 35 - -<br>- 31 30 29 - - 26 - 24 - 22 21 20 19 - 17<br>- - - - - - - - - - 6 5 4 3 2 1 | SALEABLE | | 345650003 |

| ASSEMBLY DESCRIPTION | ASSEMBLY PART NUMBER | CONNECTOR HOUSING | GROMMET CAP | TPA | RIGHT SLIDE | LEFT SLIDE | MATE ASSIST LEVER | CPA | MAT SEAL | RING SEAL | BLOCKED TERMINALS<br>CAVITY WITH A NUMBER INDICATES BLOCKED TERMINAL POSITION<br>CAVITY WITHOUT A NUMBER INDICATES OPEN TERMINAL POSITION | STATUS | COMMENTS | INTEGRAL COMPONENTS SOLD SEPARATELY<br>DRESS COVER |
|---|---|---|---|---|---|---|---|---|---|---|---|---|---|---|
| MX123 CONN ASSY 73 CKT BLU OPT9 KEY C/35 | 345668023 | C-HSG-C9 | G-CAP-9-P | TPA-C9 | RS | LS | MAL | CPA | MSEAL | RSEAL | - 71 70 - - 67 66 65 64 - - 61 60 - 58 57 - - 54 -<br>52 51 50 49 48 47 - 45 44 - - 41 - - 38 37 - - 34 33<br>- 32 - - - 28 27 - 25 - - - - - - - 18 17<br>16 15 14 13 12 11 10 9 - - - - - - - - | SALEABLE | | 345650003 |
| MX123 CONN ASSY 73 CKT GRY OPT9 KEY B/39 | 345668033 | C-HSG-B9 | G-CAP-9-P | TPA-B9 | RS | LS | MAL | CPA | MSEAL | RSEAL | 72 - - - 68 - - - - - 62 61 60 59 - - - 55 - 53<br>52 - - - 48 47 46 - 44 43 - 41 40 - 38 37 36 35 - -<br>- - - 30 - - - - - - - 22 21 20 19 18 17<br>16 15 14 - - - - - 8 - 6 - 4 - - 1 | SALEABLE | | 345650003 |
| MX123 CONN ASSY 73 CKT BLK OPT9 KEY A/28 | 345668043 | C-HSG-A9 | G-CAP-9-P | TPA-A9 | RS | LS | MAL | CPA | MSEAL | RSEAL | 72 71 70 69 68 - 66 65 64 63 - - 60 - - 57 56 - 54 -<br>52 51 50 49 48 - 46 45 44 43 - 41 40 39 38 37 36 - 34 -<br>- 32 31 30 29 28 - - - - 23 22 21 - - - -<br>- 15 14 13 12 - - - - 7 6 5 - - 2 - | SALEABLE | | 345650003 |
| MX123 CONN ASSY 73 CKT BLK OPT9 KEY A/27 | 345668053 | C-HSG-A9 | G-CAP-9-P | TPA-A9 | RS | LS | MAL | CPA | MSEAL | RSEAL | - 71 70 69 - - - 65 64 63 62 61 60 - 58 57 56 55 54 53<br>52 51 50 49 48 47 - 45 44 43 42 41 - 39 - 37 36 - 34 -<br>- 32 - 30 29 28 27 26 - 24 - - - - - 18 -<br>16 15 14 13 12 11 10 - - - - - - - 3 - - | SALEABLE | | 345650003 |
| MX123 CONN ASSY 73 CKT BLU OPT9 KEY C/30 | 345668063 | C-HSG-C9 | G-CAP-9-P | TPA-C9 | RS | LS | MAL | CPA | MSEAL | RSEAL | 72 - 70 - 68 67 66 - - 63 62 - - 59 - 57 - - - 53<br>52 51 - 49 48 47 46 - 44 - - 41 40 39 - 37 36 - 34 33<br>- 32 - 30 - - 27 26 25 24 - 22 21 20 - - -<br>- 15 14 13 - - 10 9 8 - 6 5 4 - 2 - | SALEABLE | | 345650003 |
| MX123 CONN ASSY 73 CKT GRY OPT9 KEY B/21 | 345668073 | C-HSG-B9 | G-CAP-9-P | TPA-B9 | RS | LS | MAL | CPA | MSEAL | RSEAL | 72 71 70 - 68 67 66 - - - 62 61 60 59 58 57 56 55 54 53<br>52 51 50 - 48 47 46 - - - 42 41 40 39 38 37 36 35 34 33<br>- 32 31 30 29 28 27 26 25 24 - - - - - 18 17<br>16 15 14 13 - - 10 - 8 - - - - 3 2 1 | SALEABLE | | 345650003 |
| MX123 CONN ASSY 73 CKT GRY OPT9 KEY B/11 | 345668083 | C-HSG-B9 | G-CAP-9-P | TPA-B9 | RS | LS | MAL | CPA | MSEAL | RSEAL | 72 71 70 69 68 67 66 65 64 63 - 61 60 - - 57 56 55 - -<br>52 51 50 49 48 47 46 45 44 43 - 41 40 - 38 37 36 35 34 33<br>- 32 31 30 29 28 - 26 25 24 23 22 21 20 19 18 17<br>16 15 14 13 12 11 - - 8 7 6 5 4 3 2 1 | SALEABLE | | 345650003 |
| MX123 CONN ASSY 73 CKT BLK OPT9 KEY A/37 | 345668093 | C-HSG-A9 | G-CAP-9-P | TPA-A9 | RS | LS | MAL | CPA | MSEAL | RSEAL | 72 - 70 - - 67 - - - 63 - - 60 59 58 57 56 55 - -<br>52 51 - - 48 47 46 - - 43 42 - 40 39 38 37 36 35 - -<br>- - - - 28 27 - - - - 22 21 - - 18 17<br>- - - - 12 11 - 9 - 7 - 5 - - 2 1 | SALEABLE | | 345650003 |
| MX123 CONN ASSY 73 CKT BLU OPT9 KEY C/34 | 345668113 | C-HSG-C9 | G-CAP-9-P | TPA-C9 | RS | LS | MAL | CPA | MSEAL | RSEAL | 72 71 70 69 - 67 66 65 64 - - - - - - - 56 - 54 -<br>52 51 50 49 - 47 46 45 44 - - - - 39 38 - - - 34 -<br>- - 31 30 29 28 - 26 25 - 23 22 21 - - - 17<br>16 15 14 13 12 - - 9 - 7 6 - - - - - | SALEABLE | | 345650003 |
| MX123 CONN ASSY 73 CKT BLU OPT0 KEY C/34 | 345668153 | C-HSG-C0 | G-CAP-0-P | TPA-C0 | RS | LS | MAL | CPA | MSEAL | RSEAL | - - - - - - - - - - - - - - - - - 54 53<br>- - - 49 48 47 46 45 44 43 - - 40 39 38 37 36 - - -<br>- 32 31 30 29 - - 26 25 24 23 22 21 20 19 - 17<br>- 15 - - 12 11 10 9 8 7 6 5 4 - 2 1 | SALEABLE | | 345650003 |
| MX123 CONN ASSY 73 CKT GRY OPT9 KEY B/36 | 345668163 | C-HSG-B9 | G-CAP-9-P | TPA-B9 | RS | LS | MAL | CPA | MSEAL | RSEAL | 72 71 70 69 - - 66 65 - - 62 61 60 - - 57 56 - - 53<br>52 51 50 49 48 - - - - - 42 41 40 - - 37 36 - 34 33<br>- - - - - - 26 25 24 - - 21 20 - 18 -<br>16 - 14 - - - - - 8 7 - 5 - 3 2 - | SALEABLE | | 345650003 |
| MX123 CONN ASSY 73 CKT GRY OPT0 KEY B/27 | 345668173 | C-HSG-B0 | G-CAP-0-P | TPA-B0 | RS | LS | MAL | CPA | MSEAL | RSEAL | - 71 - 69 - - 66 65 64 - - - - - 58 57 56 55 54 53<br>- 51 50 49 48 47 - 45 44 - 42 - - 39 38 37 36 35 34 33<br>- 32 31 30 29 28 - 26 25 24 23 - - - - - 17<br>- 15 - 13 12 - 10 9 - 7 - 5 - 3 2 1 | SALEABLE | | 345650003 |

| ASSEMBLY DESCRIPTION | ASSEMBLY PART NUMBER | CONNECTOR HOUSING | GROMMET CAP | TPA | RIGHT SLIDE | LEFT SLIDE | MATE ASSIST LEVER | CPA | MAT SEAL | RING SEAL | BLOCKED TERMINALS<br>CAVITY WITH A NUMBER INDICATES BLOCKED TERMINAL POSITION<br>CAVITY WITHOUT A NUMBER INDICATES OPEN TERMINAL POSITION | STATUS | COMMENTS | INTEGRAL COMPONENTS SOLD SEPARATELY<br>DRESS COVER |
|---|---|---|---|---|---|---|---|---|---|---|---|---|---|---|
| MX123 CONN ASSY 73 CKT BLK OPT0 KEY A/42 | 345668203 | C-HSG-A0 | G-CAP-0-P | TPA-A0 | RS | LS | MAL | CPA | MSEAL | RSEAL | 72 71 - 69 68 - - 65 64 63 62 61 60 59 - 57 - - - 53<br>52 51 50 49 48 - 46 45 - - - - 40 - 38 - - 35 - 33<br>- 32 - - 29 28 - 26 - - 23 22 - - - - 17<br>16 15 14 - 12 11 10 9 8 7 - - - - 2 - | SALEABLE | | 345650003 |
| MX123 CONN ASSY 73 CKT BLK OPT9 KEY A/22 | 345668223 | C-HSG-A9 | G-CAP-9-P | TPA-A9 | RS | LS | MAL | CPA | MSEAL | RSEAL | - 71 70 69 68 67 66 65 64 63 - - 60 - 58 - 56 - 54 53<br>- - 50 49 48 47 46 45 44 43 42 41 - 39 38 - 36 35 34 33<br>- - 31 30 - 28 27 26 - 24 23 22 21 - 19 18 17<br>- - - 13 - - - - 8 7 6 5 4 3 2 1 | SALEABLE | | 345650003 |
| MX123 CONN ASSY 73 CKT BLK OPT9 KEY A/43 | 345668293 | C-HSG-A9 | G-CAP-9-P | TPA-A9 | RS | LS | MAL | CPA | MSEAL | RSEAL | 72 - - - - - - - 64 - 62 61 - - - 57 56 55 54 53<br>52 51 - - - - 46 45 - 43 - 41 40 - - 37 - - - -<br>- 32 - 30 29 - 27 - 25 - - - - 20 - - -<br>16 15 - 13 - 11 10 9 - - - - 4 - - - | SALEABLE | | 345650003 |
| MX123 CONN ASSY 73 CKT BLK OPT0 KEY A/14 | 345668303 | C-HSG-A0 | G-CAP-0-P | TPA-A0 | RS | LS | MAL | CPA | MSEAL | RSEAL | - - 70 - - - - 65 - - - 61 60 - - - - 55 - -<br>- - - - - - - 45 - - - 41 40 - - - - - - -<br>- - - - 28 - 26 25 - - - - - - 18 -<br>16 - - - - - 10 - - - - - - - - - | SALEABLE | | 345650003 |
| MX123 CONN ASSY 73 CKT BLK OPT9 KEY A/41 | 345668313 | C-HSG-A9 | G-CAP-9-P | TPA-A9 | RS | LS | MAL | CPA | MSEAL | RSEAL | 72 - - - 68 - - - 64 - 62 61 - - - 57 56 55 54 53<br>52 51 - - - - 46 45 - 43 - - 40 - - 37 - - - -<br>- 32 - 30 29 - 27 - 25 - - - - 20 - - -<br>16 15 14 13 - 11 10 9 - - - 5 4 - - - | SALEABLE | | 345650003 |
| MX123 CONN ASSY 73 CKT BLK OPT9 KEY A/38 | 345668323 | C-HSG-A9 | G-CAP-9-P | TPA-A9 | RS | LS | MAL | CPA | MSEAL | RSEAL | 72 - - - - - - - 64 - 62 61 - 59 58 57 56 55 54 -<br>52 51 - - 48 - 46 45 - 43 - 41 40 - - 37 - 35 34 -<br>- 32 - 30 29 - 27 - 25 - - - - 20 - - -<br>16 15 - 13 - 11 10 9 - - - - 4 3 - - | SALEABLE | | 345650003 |
| MX123 CONN ASSY 73 CKT BLK OPT9 KEY A/42 | 345668333 | C-HSG-A9 | G-CAP-9-P | TPA-A9 | RS | LS | MAL | CPA | MSEAL | RSEAL | 72 - - - - - - - 64 - 62 61 - 59 - 57 56 55 54 -<br>52 51 - - - - 46 45 - 43 - - 40 - - 37 - 35 34 -<br>- 32 - 30 29 - 27 - 25 - - - - 20 - - -<br>16 15 - 13 - 11 10 9 - - - - 4 - - - | SALEABLE | | 345650003 |
| MX123 CONN ASSY 73 CKT BLK OPT9 KEY A/40 | 345668343 | C-HSG-A9 | G-CAP-9-P | TPA-A9 | RS | LS | MAL | CPA | MSEAL | RSEAL | 72 - - - - - - - 64 - 62 61 - - 58 57 56 55 54 53<br>52 51 - - 48 - 46 45 - 43 - 41 40 - - 37 - - - -<br>- 32 - 30 29 - 27 - 25 - - - - 20 - - -<br>16 15 - 13 - 11 10 9 - - - - 4 3 - - | SALEABLE | | 345650003 |
| MX123 CONN ASSY 73 CKT BLK OPT9 KEY A/31 | 345668353 | C-HSG-A9 | G-CAP-9-P | TPA-A9 | RS | LS | MAL | CPA | MSEAL | RSEAL | - 71 70 69 68 67 66 65 - 63 - - 60 59 58 - - - - -<br>- - 50 49 48 47 - - 44 - 42 - - 39 38 - 36 35 34 33<br>- 31 - - 28 - 26 - 24 23 22 21 - 19 18 17<br>- - 14 - 12 - - - 8 7 6 5 - 3 2 1 | SALEABLE | | 345650003 |
| MX123 CONN ASSY 73 CKT BLK OPT9 KEY A/33 | 345668363 | C-HSG-A9 | G-CAP-9-P | TPA-A9 | RS | LS | MAL | CPA | MSEAL | RSEAL | - 71 70 69 - 67 66 65 - 63 - - 60 59 58 - - - - -<br>- - 50 49 48 47 - - 44 - 42 41 - 39 38 - 36 35 34 33<br>- 31 - - 28 - 26 - 24 23 22 21 - 19 18 17<br>- - - - 12 - - - 8 7 6 - - 3 2 1 | SALEABLE | | 345650003 |
| MX123 CONN ASSY 73 CKT BLK OPT9 KEY A/36 | 345668373 | C-HSG-A9 | G-CAP-9-P | TPA-A9 | RS | LS | MAL | CPA | MSEAL | RSEAL | - 71 70 69 68 67 66 65 - 63 - - 60 - - - - - - 53<br>- - 50 49 - 47 - - 44 - 42 - - 39 38 - 36 - - 33<br>- 31 - - 28 - 26 - 24 23 22 21 - 19 18 17<br>- - 14 - 12 - - - 8 7 6 5 - - 2 1 | SALEABLE | | 345650003 |
| MX123 CONN ASSY 73 CKT BLK OPT9 KEY A/32 | 345668383 | C-HSG-A9 | G-CAP-9-P | TPA-A9 | RS | LS | MAL | CPA | MSEAL | RSEAL | - 71 70 69 68 67 66 65 - 63 - - 60 - 58 - - - - 53<br>- - 50 49 48 47 - - 44 - 42 41 - 39 38 - 36 - - 33<br>- 31 - - 28 - 26 - 24 23 22 21 - 19 18 17<br>- - 14 - 12 - - - 8 7 6 5 - 3 2 1 | SALEABLE | | 345650003 |

| ASSEMBLY DESCRIPTION | ASSEMBLY PART NUMBER | CONNECTOR HOUSING | GROMMET CAP | TPA | RIGHT SLIDE | LEFT SLIDE | MATE ASSIST LEVER | CPA | MAT SEAL | RING SEAL | BLOCKED TERMINALS<br>CAVITY WITH A NUMBER INDICATES BLOCKED TERMINAL POSITION<br>CAVITY WITHOUT A NUMBER INDICATES OPEN TERMINAL POSITION | STATUS | COMMENTS | INTEGRAL COMPONENTS SOLD SEPARATELY<br>DRESS COVER |
|---|---|---|---|---|---|---|---|---|---|---|---|---|---|---|
| MX123 CONN ASSY 73 CKT BLK OPT0 KEY A/44 | 345668393 | C-HSG-A0 | G-CAP-0-P | TPA-A0 | RS | LS | MAL | CPA | MSEAL | RSEAL | - 71 - 69 68 67 66 65 64 - - 61 60 59 58 57 - - - -<br>- - 50 - - 47 46 45 44 - 42 41 40 39 38 37 - - - -<br>- 32 - - - - - 26 25 - - - - - - - -<br>- - - - - 11 - - - - - 5 4 - - - | SALEABLE | | 345650003 |
| MX123 CONN ASSY 73 CKT GRY OPT0 KEY B/48 | 345668403 | C-HSG-B0 | G-CAP-0-P | TPA-B0 | RS | LS | MAL | CPA | MSEAL | RSEAL | 72 71 70 69 68 67 66 - - 63 62 61 60 - 58 - 56 - 54 -<br>52 51 - - - 47 - 45 44 43 42 41 40 - 38 - 36 - 34 -<br>- 31 30 - 28 27 26 25 - - 22 - 20 19 18 17<br>- 16 - 14 13 12 11 10 9 8 - - - - - 2 1 | SALEABLE | | 345650003 |
| MX123 CONN ASSY 73 CKT BLK OPT0 KEY A/43 | 345668413 | C-HSG-A0 | G-CAP-0-P | TPA-A0 | RS | LS | MAL | CPA | MSEAL | RSEAL | - 71 - 69 68 67 66 65 64 - - 61 60 59 58 57 - - - -<br>- - 50 - - 47 46 45 44 - 42 41 40 39 38 37 - - - -<br>- 32 - - - - - 26 25 - - - - - - - -<br>- - - 13 - 11 - - - - - 5 4 - - - | SALEABLE | | 345650003 |
| MX123 CONN ASSY 73 CKT BLU OPT0 KEY C/36 | 345668423 | C-HSG-C0 | G-CAP-0-P | TPA-C0 | RS | LS | MAL | CPA | MSEAL | RSEAL | 72 71 70 - 68 - 66 65 - 63 - - - 59 58 - 56 55 - 53<br>- - - - - 47 - - - 43 - - 40 39 38 - 36 35 - -<br>- 32 31 30 29 - - - - 24 23 22 21 20 19 18 17<br>- - - - - - - - - - 6 5 4 3 2 1 | SALEABLE | | 345650003 |
| MX123 CONN ASSY 73 CKT BLU OPT0 KEY C/45 | 345668443 | C-HSG-C0 | G-CAP-0-P | TPA-C0 | RS | LS | MAL | CPA | MSEAL | RSEAL | 72 - - 69 68 - - - - 63 62 - - - - - 56 55 - 53<br>- - - 49 - - 46 - - 43 42 - 40 - - - 36 35 - -<br>- 31 30 29 - - 26 - 24 - 22 21 20 19 - -<br>- - - - - - - - - - - 4 3 2 1 | SALEABLE | | 345650003 |
| MX123 CONN ASSY 73 CKT BLK OPT0 KEY A/48 | 345668453 | C-HSG-A0 | G-CAP-0-P | TPA-A0 | RS | LS | MAL | CPA | MSEAL | RSEAL | - - - - - 67 - - - - 62 61 - 59 58 - - 55 - 53<br>- - - - - 47 - - - - - 41 - - - - - 35 - 33<br>- - - - - - - 27 26 25 24 - - - - 19 18 17<br>- 16 - - - 11 10 9 8 - - - - 3 - 1 | SALEABLE | | 345650003 |
| MX123 CONN ASSY 73 CKT GRY OPT0 KEY B/34 | 345668463 | C-HSG-B0 | G-CAP-0-P | TPA-B0 | RS | LS | MAL | CPA | MSEAL | RSEAL | - 71 - 69 - 67 66 65 64 63 - - - - 58 57 56 - 54 53<br>- 51 50 49 - - - 45 - - 42 - - 39 - - - - 34 33<br>- 32 31 - 29 28 27 26 25 24 23 - - - - - 17<br>- - - 13 12 11 10 9 - 7 - 5 - 3 2 - | SALEABLE | | 345650003 |
| MX123 CONN ASSY 73 CKT BLU OPT0 KEY C/49 | 345668473 | C-HSG-C0 | G-CAP-0-P | TPA-C0 | RS | LS | MAL | CPA | MSEAL | RSEAL | 72 - - 69 68 - - - - 63 - - - 59 - - 56 - - 53<br>- - - - - - 46 - - 43 - - 40 39 - - 36 - - -<br>- 31 30 29 - - - - 24 23 22 21 20 - - -<br>- - - - - - - - - - - - 4 3 2 1 | SALEABLE | | 345650003 |
| MX123 CONN ASSY 73 CKT BLK OPT0 KEY A/51 | 345668483 | C-HSG-A0 | G-CAP-0-P | TPA-A0 | RS | LS | MAL | CPA | MSEAL | RSEAL | - - - - - 67 - - - - 62 - - 59 58 - - 55 - -<br>- - - - - 47 - - - - - 41 - - - - - 35 - -<br>- - - - - - - 27 26 25 24 - - - - 19 18 17<br>- 16 - - - 11 10 9 8 - - - - 3 - 1 | SALEABLE | | 345650003 |
| MX123 CONN ASSY 73 CKT GRY OPT0 KEY B/31 | 345668493 | C-HSG-B0 | G-CAP-0-P | TPA-B0 | RS | LS | MAL | CPA | MSEAL | RSEAL | - 71 - 69 - - 66 65 64 63 - - - - 58 57 56 - 54 53<br>- 51 50 49 - - - 45 - - 42 41 - 39 38 37 36 35 34 -<br>- 32 31 - 29 28 27 26 25 24 23 - - - - - -<br>- - - 13 12 11 10 9 - 7 - 5 - 3 2 1 | SALEABLE | | 345650003 |
| MX123 CONN ASSY 73 CKT GRY OPT0 KEY B/27 | 345668503 | C-HSG-B0 | G-CAP-0-P | TPA-B0 | RS | LS | MAL | CPA | MSEAL | RSEAL | - - - - - - - - - - - 61 - - 58 57 56 - - -<br>- 51 50 - - 47 46 45 - - - 41 40 - 38 37 36 - - -<br>- 31 30 - 28 - 26 25 - - 22 21 20 - - -<br>- 16 15 14 - - - 10 - - - - - - - - - | SALEABLE | | 345650003 |
| MX123 CONN ASSY 73 CKT BLK OPT9 KEY A/48 | 345668513 | C-HSG-A9 | G-CAP-9-P | TPA-A9 | RS | LS | MAL | CPA | MSEAL | RSEAL | - - - - - 67 - - - - 62 - - 59 58 - - 55 - -<br>- - - - - 47 - - - - 42 41 - - - - - 35 - -<br>- - - - - - - 27 26 25 - - - 21 20 19 18 17<br>- 16 - - - 11 10 9 8 - - - 4 3 - 1 | SALEABLE | | 345650003 |

| ASSEMBLY DESCRIPTION | ASSEMBLY PART NUMBER | CONNECTOR HOUSING | GROMMET CAP | TPA | RIGHT SLIDE | LEFT SLIDE | MATE ASSIST LEVER | CPA | MAT SEAL | RING SEAL | BLOCKED TERMINALS<br>CAVITY WITH A NUMBER INDICATES BLOCKED TERMINAL POSITION<br>CAVITY WITHOUT A NUMBER INDICATES OPEN TERMINAL POSITION | STATUS | COMMENTS | INTEGRAL COMPONENTS SOLD SEPARATELY<br>DRESS COVER |
|---|---|---|---|---|---|---|---|---|---|---|---|---|---|---|
| MX123 CONN ASSY 73 CKT GRY OPT9 KEY B/27 | 345668523 | C-HSG-B9 | G-CAP-9-P | TPA-B9 | RS | LS | MAL | CPA | MSEAL | RSEAL | - 71 - 69 - 67 66 65 64 63 - - 60 59 58 57 56 - 54 53<br>- 51 50 49 - - - 45 44 - 42 41 - 39 38 37 36 35 34 33<br>- 32 31 - 29 28 27 26 25 24 23 - - - - - -<br>- - - 13 12 11 10 9 - 7 - 5 - 3 - 1 | SALEABLE | | 345650003 |
| MX123 CONN ASSY 73 CKT BLU OPT9 KEY C/35 | 345668533 | C-HSG-C9 | G-CAP-9-P | TPA-C9 | RS | LS | MAL | CPA | MSEAL | RSEAL | 72 71 - 69 68 - - - - 63 62 - - 59 58 - 56 55 - 53<br>- - - - - - 46 - - 43 42 - 40 39 38 - 36 35 - -<br>- 31 30 29 - - 26 - 24 23 22 21 20 19 - -<br>- - - - - - - 9 8 7 6 5 4 3 2 1 | SALEABLE | | 345650003 |
| MX123 CONN ASSY 73 CKT BLU OPT9 KEY C/35 | 345668543 | C-HSG-C9 | G-CAP-9-P | TPA-C9 | RS | LS | MAL | CPA | MSEAL | RSEAL | 72 - 70 - 68 - - - - 63 62 61 - 59 58 - 56 55 - 53<br>- - - - - - - - - 43 42 41 40 39 38 - 36 35 - -<br>- 31 30 29 - - 26 25 24 23 22 21 20 19 18 17<br>- - - - - - - - - - 6 5 4 3 2 1 | SALEABLE | | 345650003 |
| MX123 CONN ASSY 73 CKT GRY OPT0 KEY B/22 | 345668553 | C-HSG-B0 | G-CAP-0-P | TPA-B0 | RS | LS | MAL | CPA | MSEAL | RSEAL | - 71 70 69 - 67 66 65 64 63 - - - - 58 57 56 - 54 53<br>- 51 50 49 48 47 - 45 44 - 42 - - 39 38 37 36 35 34 33<br>- 32 31 30 29 28 27 26 25 24 23 - - - 19 18 17<br>- - - 13 12 11 10 9 - 7 - 5 - 3 2 1 | SALEABLE | | 345650003 |
| MX123 CONN ASSY 73 CKT BLK OPT0 KEY A/35 | 345668563 | C-HSG-A0 | G-CAP-0-P | TPA-A0 | RS | LS | MAL | CPA | MSEAL | RSEAL | - 71 - 69 68 - 66 65 64 - 62 61 - - - - - - 54 53<br>- - 50 49 - - - 45 44 - - 41 - - - - - - 34 33<br>- 32 31 30 29 - 27 26 25 24 23 - - 20 19 - -<br>- 16 15 14 13 - - 10 - 8 - 6 5 4 3 - - | SALEABLE | | 345650003 |
| MX123 CONN ASSY 73 CKT GRY OPT0 KEY B/59 | 345668573 | C-HSG-B0 | G-CAP-0-P | TPA-B0 | RS | LS | MAL | CPA | MSEAL | RSEAL | - - - - - - - - - - 62 - - - 58 - - - 54 53<br>- - - - - - - - - - 42 - - - - - - - 34 -<br>- - - - - - - - 27 - 25 - - - - - - - 18 17<br>- - - - - - - - 11 10 - - - - - - - - 2 1 | SALEABLE | | 345650003 |
| MX123 CONN ASSY 73 CKT BLU OPT0 KEY C/44 | 345668583 | C-HSG-C0 | G-CAP-0-P | TPA-C0 | RS | LS | MAL | CPA | MSEAL | RSEAL | - - - - 68 - - - - 63 62 61 - 59 58 57 - 55 - 53<br>- - - - 48 - - - - 43 42 41 - - - 37 36 35 - 33<br>- 32 - - 29 - 27 - - - - - - - 20 19 18 -<br>- - - - - 11 10 - - - - - - 4 3 2 1 | SALEABLE | | 345650003 |
| MX123 CONN ASSY 73 CKT GRY OPT0 KEY B/32 | 345668593 | C-HSG-B0 | G-CAP-0-P | TPA-B0 | RS | LS | MAL | CPA | MSEAL | RSEAL | - 71 70 69 - 67 66 65 64 63 - - - - 58 57 56 - 54 53<br>- 51 50 49 - - - 45 44 - 42 - - 39 - - - - 34 33<br>- 32 31 - 29 28 27 26 25 24 23 - - - - - 17<br>- - - 13 12 11 10 9 - 7 - 5 - 3 2 - | SALEABLE | | 345650003 |
| MX123 CONN ASSY 73 CKT BLK OPT0 KEY A/47 | 345668603 | C-HSG-A0 | G-CAP-0-P | TPA-A0 | RS | LS | MAL | CPA | MSEAL | RSEAL | 72 71 70 - - 67 - 65 64 63 62 61 60 - 58 - 56 - 54 -<br>52 51 50 - - 47 - 45 - 43 42 41 40 - - - 36 - 34 -<br>- 32 31 30 - - 27 26 25 24 - 22 - 20 19 - -<br>- 16 15 14 13 - - - 9 8 - 6 5 4 3 2 1 | SALEABLE | | 345650003 |
| MX123 CONN ASSY 73 CKT BLU OPT0 KEY C/43 | 345668613 | C-HSG-C0 | G-CAP-0-P | TPA-C0 | RS | LS | MAL | CPA | MSEAL | RSEAL | 72 - - 69 68 - - - - 63 62 - - - - - 56 55 - 53<br>- - - 49 - - 46 - - 43 42 - 40 - - - 36 35 - -<br>- - 31 30 29 - - 26 - 24 - 22 21 20 19 - -<br>- - - - - - - - - - 6 5 4 3 2 1 | SALEABLE | | 345650003 |
| MX123 CONN ASSY 73 CKT BLU OPT9 KEY C/31 | 345668623 | C-HSG-C9 | G-CAP-9-P | TPA-C9 | RS | LS | MAL | CPA | MSEAL | RSEAL | 72 71 70 69 - 67 66 - 64 - - - 60 - - - - - 54 -<br>52 51 50 49 - 47 46 - 44 - - - 40 39 38 - - - - -<br>- - 30 29 28 27 26 25 24 23 22 21 - - - 17<br>- 16 15 14 13 12 11 10 9 8 7 6 5 - - - - | SALEABLE | | 345650003 |
| MX123 CONN ASSY 73 CKT GRY OPT0 KEY B/22 | 345668633 | C-HSG-B0 | G-CAP-0-P | TPA-B0 | RS | LS | MAL | CPA | MSEAL | RSEAL | - 71 70 69 68 67 66 65 64 63 - - 60 59 58 57 56 55 54 53<br>- 51 50 49 - - - 45 44 - 42 41 - 39 38 37 36 35 34 33<br>- 32 31 - 29 28 27 26 25 24 23 - - - - - -<br>- - - 13 12 11 10 9 8 7 - 5 - 3 2 1 | SALEABLE | | 345650003 |

molex

# MX123 SEALED RCPT ASSY (73 Ckt)
## BOM & PIN OUT SHEET

| ASSEMBLY DESCRIPTION | ASSEMBLY PART NUMBER | CONNECTOR HOUSING | GROMMET CAP | TPA | RIGHT SLIDE | LEFT SLIDE | MATE ASSIST LEVER | CPA | MAT SEAL | RING SEAL | BLOCKED TERMINALS<br>CAVITY WITH A NUMBER INDICATES BLOCKED TERMINAL POSITION<br>CAVITY WITHOUT A NUMBER INDICATES OPEN TERMINAL POSITION | STATUS | COMMENTS | INTEGRAL COMPONENTS SOLD SEPARATELY<br>DRESS COVER |
|---|---|---|---|---|---|---|---|---|---|---|---|---|---|---|
| MX123 CONN ASSY 73 CKT BLU OPT0 KEY C/37 | 345668643 | C-HSG-C0 | G-CAP-0-P | TPA-C0 | RS | LS | MAL | CPA | MSEAL | RSEAL | 72 - - 69 68 - - 65 - 63 62 - - 59 58 - 56 55 - 53<br>- - - - - 47 46 - - 43 42 - 40 39 38 - 36 35 - -<br>- - 31 30 29 - - 26 - 24 23 22 21 20 19 - -<br>- - - - - - - - - - 6 5 4 3 2 1 | SALEABLE | | 345650003 |
| MX123 CONN ASSY 73 CKT BLU OPT9 KEY C/36 | 345668653 | C-HSG-C9 | G-CAP-9-P | TPA-C9 | RS | LS | MAL | CPA | MSEAL | RSEAL | 72 - 70 - 68 - - - - - 62 - - 59 58 - 56 55 54 53<br>- - - 49 - - - - 44 - 42 - 40 39 38 - 36 35 - -<br>32 31 30 29 - - 26 - 24 23 22 21 20 19 18 17<br>- - - - - - - - - - 6 5 4 3 2 1 | SALEABLE | | 345650003 |
| MX123 CONN ASSY 73 CKT GRY OPT0 KEY B/46 | 345668663 | C-HSG-B0 | G-CAP-0-P | TPA-B0 | RS | LS | MAL | CPA | MSEAL | RSEAL | - - - - 68 67 66 65 - - 62 - - 59 - - - - 54 53<br>- - - - 48 47 46 45 44 - 42 41 40 39 - - - 35 34 -<br>- 31 - - - 27 - - - - - - - - 19 18 17<br>- - - - - - - - - - - - - - 3 2 1 | SALEABLE | | 345650003 |
| MX123 CONN ASSY 73 CKT NAT OPT0 KEY F/45 | 345668673 | C-HSG-F0 | G-CAP-0-P | TPA-F0 | RS | LS | MAL | CPA | MSEAL | RSEAL | - 71 - 69 - - - 65 64 - - 61 60 - 58 - 56 55 54 -<br>- - 50 - - - - 45 - 43 42 - - - 38 - - - - -<br>- 31 - 29 28 - - - - 23 - - - 19 18 17<br>16 - - - 12 11 - - - 7 - - - 3 - 1 | SALEABLE | | 345650003 |
| MX123 CONN ASSY 73 CKT GRY OPT0 KEY B/45 | 345668683 | C-HSG-B0 | G-CAP-0-P | TPA-B0 | RS | LS | MAL | CPA | MSEAL | RSEAL | - 71 - 69 - - - 65 64 - - 61 60 - 58 - 56 55 54 -<br>- - 50 - - - - 45 - 43 42 - - - 38 - - - - -<br>- 31 - 29 28 - - - - 23 - - - 19 18 17<br>16 - - - 12 11 - - - 7 - - - 3 - 1 | SALEABLE | | 345650003 |
| MX123 CONN ASSY 73 CKT BLK OPT0 KEY A/45 | 345668693 | C-HSG-A0 | G-CAP-0-P | TPA-A0 | RS | LS | MAL | CPA | MSEAL | RSEAL | - 71 - 69 - - - 65 64 - - 61 60 - 58 - 56 55 54 -<br>- - 50 - - - - 45 - 43 42 - - - 38 - - - - -<br>- 31 - 29 28 - - - - 23 - - - 19 18 17<br>16 - - - 12 11 - - - 7 - - - 3 - 1 | SALEABLE | | 345650003 |
| MX123 CONN ASSY 73 CKT GRY OPT0 KEY B/42 | 345668703 | C-HSG-B0 | G-CAP-0-P | TPA-B0 | RS | LS | MAL | CPA | MSEAL | RSEAL | 72 71 70 - - 67 - 65 - 63 62 61 60 - 58 - 56 - 54 -<br>52 51 - - - - 46 45 - 43 42 41 40 - 38 - 36 - 34 -<br>32 31 30 - - 27 26 25 24 - 22 - 20 19 18 -<br>16 - 14 13 - - - 9 8 - - - - - 2 1 | SALEABLE | | 345650003 |
| MX123 CONN ASSY 73 CKT GRY OPT9 KEY B/46 | 345668713 | C-HSG-B9 | G-CAP-9-P | TPA-B9 | RS | LS | MAL | CPA | MSEAL | RSEAL | - - - - 68 67 66 65 - - 62 - - 59 - - - - 54 53<br>- - - - 48 47 46 45 44 - 42 41 40 39 - - - 35 34 -<br>- 31 - - - 27 - - - - - - - - 19 18 17<br>- - - - - - - - - - - - - - 3 2 1 | SALEABLE | | 345650003 |
| MX123 CONN ASSY 73 CKT BLU OPT0 KEY C/36 | 345668723 | C-HSG-C0 | G-CAP-0-P | TPA-C0 | RS | LS | MAL | CPA | MSEAL | RSEAL | 72 - - 69 68 67 - 65 - 63 62 - - 59 58 - 56 55 - 53<br>- - - - - 47 46 - - 43 42 - 40 39 38 - 36 35 - -<br>- 31 30 29 - - 26 - 24 23 22 21 20 19 - -<br>- - - - - - - - - - 6 5 4 3 2 1 | SALEABLE | | 345650003 |
| MX123 CONN ASSY 73 CKT BLK OPT0 KEY A/49 | 345668733 | C-HSG-A0 | G-CAP-0-P | TPA-A0 | RS | LS | MAL | CPA | MSEAL | RSEAL | - - - - - 67 - - - - 62 61 - 59 58 - - 55 - 53<br>- - - - - 47 - - - - - 41 - - - - - 35 - 33<br>- - - - - 27 26 25 24 - - - - 19 18 17<br>16 - - - - 11 10 9 8 - - - - - - 1 | SALEABLE | | 345650003 |
| MX123 CONN ASSY 73 CKT BLU OPT0 KEY C/41 | 345668743 | C-HSG-C0 | G-CAP-0-P | TPA-C0 | RS | LS | MAL | CPA | MSEAL | RSEAL | - - - - 68 - - 65 - 63 62 61 60 59 58 57 56 55 - 53<br>- - - - 48 - - 45 - 43 42 41 40 - - 37 36 35 34 33<br>32 31 - - - - - - - - - - - 20 19 18 -<br>- - - - - - - - - - - - - 4 3 2 1 | SALEABLE | | 345650003 |
| MX123 CONN ASSY 73 CKT GRY OPT0 KEY B/56 | 345668753 | C-HSG-B0 | G-CAP-0-P | TPA-B0 | RS | LS | MAL | CPA | MSEAL | RSEAL | - - - - - - - - - - 62 - - 59 - - - - - -<br>- - - - - - - - - - 42 41 - 39 38 - - - - -<br>- 31 - - - 27 - - - 23 22 - 20 - 18 17<br>- 15 - - - - - - - 7 - - 4 3 - - | SALEABLE | | 345650003 |

| ASSEMBLY DESCRIPTION | ASSEMBLY PART NUMBER | CONNECTOR HOUSING | GROMMET CAP | TPA | RIGHT SLIDE | LEFT SLIDE | MATE ASSIST LEVER | CPA | MAT SEAL | RING SEAL | BLOCKED TERMINALS<br>CAVITY WITH A NUMBER INDICATES BLOCKED TERMINAL POSITION<br>CAVITY WITHOUT A NUMBER INDICATES OPEN TERMINAL POSITION | STATUS | COMMENTS | INTEGRAL COMPONENTS SOLD SEPARATELY<br>DRESS COVER |
|---|---|---|---|---|---|---|---|---|---|---|---|---|---|---|
| MX123 CONN ASSY 73 CKT BLK OPT0 KEY A/45 | 345668763 | C-HSG-A0 | G-CAP-0-P | TPA-A0 | RS | LS | MAL | CPA | MSEAL | RSEAL | - - - 69 68 - - 65 64 63 62 61 60 - - - - - - -<br>- - - 49 48 - - 45 44 43 42 41 40 - 38 - - - 34 -<br>- - - - - - - 25 24 23 22 - 20 19 - -<br>- - - - - - - 9 - - 6 5 4 - - - | SALEABLE | | 345650003 |
| MX123 CONN ASSY 73 CKT GRY OPT9 KEY B/29 | 345668773 | C-HSG-B9 | G-CAP-9-P | TPA-B9 | RS | LS | MAL | CPA | MSEAL | RSEAL | - 71 - 69 - 67 66 65 64 63 - - - - 58 57 56 - 54 53<br>- 51 50 49 - - - 45 44 - 42 41 - 39 38 37 36 35 34 33<br>- 32 31 - 29 28 27 26 25 24 23 - - - - - -<br>- - - 13 12 11 10 9 - 7 - 5 - 3 - 1 | SALEABLE | | 345650003 |
| MX123 CONN ASSY 73 CKT BLK OPT9 KEY A/48 | 345668783 | C-HSG-A9 | G-CAP-9-P | TPA-A9 | RS | LS | MAL | CPA | MSEAL | RSEAL | - - - - - 67 - - - - 62 - - 59 58 - - 55 - -<br>- - - - - 47 - - - - 42 41 - - - - - 35 - -<br>- - - - - 27 26 25 24 - - - 20 19 18 17<br>- 16 - - - - 11 10 9 8 - - - 4 3 - 1 | SALEABLE | | 345650003 |
| MX123 CONN ASSY 73 CKT BLU OPT9 KEY C/38 | 345668793 | C-HSG-C9 | G-CAP-9-P | TPA-C9 | RS | LS | MAL | CPA | MSEAL | RSEAL | 72 - - 69 68 - - - 64 63 62 - - 59 58 - 56 55 - 53<br>- - - - - - 46 - - 43 42 - 40 39 38 - 36 35 - -<br>- - 31 30 29 - - 26 - 24 23 22 21 20 19 - -<br>- - - - - - - - - - 6 5 4 3 2 1 | SALEABLE | | 345650003 |
| MX123 CONN ASSY 73 CKT GRY OPT0 KEY B/34 | 345668803 | C-HSG-B0 | G-CAP-0-P | TPA-B0 | RS | LS | MAL | CPA | MSEAL | RSEAL | 72 71 70 69 - - - - 64 63 62 61 60 - - - 56 55 - -<br>52 - - - - 47 - - 44 - - 41 - - - - 36 35 34 -<br>- - - 29 28 27 - 25 - - - 21 - 19 18 17<br>- 15 14 - 12 11 - - - - - - - 3 2 1 | SALEABLE | | 345650003 |
| MX123 CONN ASSY 73 CKT GRY OPT9 KEY B/61 | 345668813 | C-HSG-B9 | G-CAP-9-P | TPA-B9 | RS | LS | MAL | CPA | MSEAL | RSEAL | - - - - - - 66 - - - 62 - - - 58 - - - - -<br>- - - - - - - - - - - 41 - - 38 37 - - - -<br>- - - - - - - - - - - - - - - 20 19 18 17<br>- - - - - - - - - - - - - - - 5 - - - 1 | SALEABLE | | 345650003 |
| MX123 CONN ASSY 73 CKT BLU OPT9 KEY C/42 | 345668823 | C-HSG-C9 | G-CAP-9-P | TPA-C9 | RS | LS | MAL | CPA | MSEAL | RSEAL | - - - - 68 - - 65 - 63 62 61 - 59 58 57 56 55 - 53<br>- - - - 48 - - 45 - 43 42 41 - - 38 37 36 35 34 33<br>- 32 31 - - - - - - - - - - 20 19 18 -<br>- - - - - - - - - - - - 4 3 2 1 | SALEABLE | | 345650003 |
| MX123 CONN ASSY 73 CKT BLU OPT9 KEY C/49 | 345668833 | C-HSG-C9 | G-CAP-9-P | TPA-C9 | RS | LS | MAL | CPA | MSEAL | RSEAL | - 71 - 69 - - - 65 64 - - 61 60 - 58 - 56 55 - -<br>- - 50 - - - - 45 - 43 42 - - - 38 - - - - -<br>- 31 - 29 28 - - - - 23 - - - 19 18 -<br>- 16 - - - 12 11 - - - - - - - 3 - - | SALEABLE | | 345650003 |
| MX123 CONN ASSY 73 CKT BLU OPT0 KEY C/42 | 345668843 | C-HSG-C0 | G-CAP-0-P | TPA-C0 | RS | LS | MAL | CPA | MSEAL | RSEAL | - - - - 68 - - 65 - 63 62 61 60 59 58 57 56 55 - 53<br>- - - - 48 - - 45 - 43 42 - 40 - - 37 36 35 34 33<br>- 32 31 - - - - - - - - - - 20 19 18 -<br>- - - - - - - - - - - - 4 3 2 1 | SALEABLE | | 345650003 |
| MX123 CONN ASSY 73 CKT GRY OPT0 KEY B/36 | 345668853 | C-HSG-B0 | G-CAP-0-P | TPA-B0 | RS | LS | MAL | CPA | MSEAL | RSEAL | - 71 70 69 - - 66 65 64 - - - - - 58 57 56 - 54 53<br>- 51 50 49 - - - 45 - - 42 - - 39 - - - - 34 33<br>- 32 31 - 29 28 - 26 25 24 23 - - - - - 17<br>- 15 - 13 12 - 10 9 - 7 - 5 - 3 2 - | SALEABLE | | 345650003 |
| MX123 CONN ASSY 73 CKT GRY OPT0 KEY B/44 | 345668863 | C-HSG-B0 | G-CAP-0-P | TPA-B0 | RS | LS | MAL | CPA | MSEAL | RSEAL | - - - - 68 67 66 65 - - 62 - 60 59 - - - - 54 53<br>- - - - 48 47 46 45 44 - 42 41 40 39 - - - 35 34 -<br>- 31 - - - 27 - - - - - - - 19 18 17<br>- 15 - - - - - - - - - - - 3 2 1 | SALEABLE | | 345650003 |
| MX123 CONN ASSY 73 CKT GRY OPT0 KEY B/46 | 345668873 | C-HSG-B0 | G-CAP-0-P | TPA-B0 | RS | LS | MAL | CPA | MSEAL | RSEAL | - - - - 68 67 66 65 - - 62 - 60 59 - - - - 54 53<br>- - - - 48 47 46 45 44 - 42 41 40 39 - - - 35 34 -<br>- - - - - 27 - - - - - - - 19 18 17<br>- - - - - - - - - - - - - 3 2 1 | SALEABLE | | 345650003 |

| ASSEMBLY DESCRIPTION | ASSEMBLY PART NUMBER | CONNECTOR HOUSING | GROMMET CAP | TPA | RIGHT SLIDE | LEFT SLIDE | MATE ASSIST LEVER | CPA | MAT SEAL | RING SEAL | BLOCKED TERMINALS<br>CAVITY WITH A NUMBER INDICATES BLOCKED TERMINAL POSITION<br>CAVITY WITHOUT A NUMBER INDICATES OPEN TERMINAL POSITION | STATUS | COMMENTS | INTEGRAL COMPONENTS SOLD SEPARATELY<br>DRESS COVER |
|---|---|---|---|---|---|---|---|---|---|---|---|---|---|---|
| MX123 CONN ASSY 73 CKT GRY OPT0 KEY B/69 | 345668883 | C-HSG-B0 | G-CAP-0-P | TPA-B0 | RS | LS | MAL | CPA | MSEAL | RSEAL | - - - - - - - - - - 62 - - - - - - - 54 53<br>- - - - - - - - - - 42 - - - - - - - - -<br>-<br>- | SALEABLE | | 345650003 |
| MX123 CONN ASSY 73 CKT BLK OPT0 KEY A/41 | 345668893 | C-HSG-A0 | G-CAP-0-P | TPA-A0 | RS | LS | MAL | CPA | MSEAL | RSEAL | - 71 - 69 68 - - - 64 - 62 61 - - - - - - 54 53<br>- - 50 - - - - - 44 - - 41 - - - - - - 34 33<br>-<br>32 31 30 29 - - 26 25 24 - - - 20 19 - -<br>16 15 14 13 - - 10 - 8 - 6 5 4 3 - - | SALEABLE | | 345650003 |
| MX123 CONN ASSY 73 CKT BLK OPT0 KEY A/48 | 345668913 | C-HSG-A0 | G-CAP-0-P | TPA-A0 | RS | LS | MAL | CPA | MSEAL | RSEAL | - - - - - 67 - - - - 62 61 - 59 58 - - 55 - 53<br>- - - - - 47 - - - - - - - - - - - 35 - 33<br>-<br>- - - - - 27 26 25 24 - - - 20 19 18 17<br>16 - - - - 11 10 9 8 - - - 4 3 - - | SALEABLE | | 345650003 |
| MX123 CONN ASSY 73 CKT BLK OPT0 KEY A/52 | 345668923 | C-HSG-A0 | G-CAP-0-P | TPA-A0 | RS | LS | MAL | CPA | MSEAL | RSEAL | 72 - - - - - 66 65 - - - - - - 58 - - - - -<br>- - - - 48 47 - - - - - - - - - - - 35 - 33<br>-<br>- 31 30 - - - - - 24 23 22 - 20 19 - 17<br>- - - - - - - - - 7 6 - 4 - 2 1 | SALEABLE | | 345650003 |
| MX123 CONN ASSY 73 CKT BLU OPT0 KEY C/30 | 345668933 | C-HSG-C0 | G-CAP-0-P | TPA-C0 | RS | LS | MAL | CPA | MSEAL | RSEAL | - - 70 - - 67 - - 64 - 62 61 60 - - 57 - 55 54 -<br>52 51 50 49 48 47 46 45 44 - 42 41 40 - - 37 - 35 34 33<br>-<br>32 - - - 28 27 26 25 - - - - - 19 18 17<br>16 15 14 13 12 11 10 9 8 7 - - - - - - | SALEABLE | | 345650003 |
| MX123 CONN ASSY 73 CKT GRY OPT0 KEY B/24 | 345668943 | C-HSG-B0 | G-CAP-0-P | TPA-B0 | RS | LS | MAL | CPA | MSEAL | RSEAL | - 71 70 69 - 67 66 65 64 63 - - 60 59 58 57 56 - 54 53<br>- 51 50 49 48 47 - 45 44 - 42 41 - 39 38 37 36 35 34 33<br>-<br>32 31 30 29 28 27 26 25 24 23 - - - - - -<br>- - - 13 12 11 10 9 - 7 - 5 - - - 1 | SALEABLE | | 345650003 |
| MX123 CONN ASSY 73 CKT BLU OPT9 KEY C/43 | 345668953 | C-HSG-C9 | G-CAP-9-P | TPA-C9 | RS | LS | MAL | CPA | MSEAL | RSEAL | - - - - 68 - - 65 - 63 62 61 - 59 58 57 56 55 - 53<br>- - - - 48 - - 45 - 43 42 41 - - - 37 36 35 34 33<br>-<br>32 31 - - - - - - - - - - 20 19 18 -<br>- - - - - - - - - - - - 4 3 2 1 | SALEABLE | | 345650003 |
| MX123 CONN ASSY 73 CKT GRY OPT0 KEY B/31 | 345668963 | C-HSG-B0 | G-CAP-0-P | TPA-B0 | RS | LS | MAL | CPA | MSEAL | RSEAL | - 71 70 69 68 67 66 65 64 63 - - - - 58 57 56 - 54 53<br>- 51 50 49 - - - 45 44 - 42 - - 39 - - - - 34 33<br>-<br>32 31 - 29 28 27 26 25 24 23 - - - - - -<br>- - - 13 12 11 10 9 8 7 - 5 - 3 2 - | SALEABLE | | 345650003 |
| MX123 CONN ASSY 73 CKT BLK OPT0 KEY A/47 | 345668973 | C-HSG-A0 | G-CAP-0-P | TPA-A0 | RS | LS | MAL | CPA | MSEAL | RSEAL | - - - - - 67 - - - - 62 61 - 59 58 - - 55 - 53<br>- - - - - 47 - - - - - 41 - - - - - 35 - 33<br>-<br>- - - - - 27 26 25 24 - - - 20 19 18 -<br>16 - - - - 11 10 9 8 - - - 4 3 - 1 | SALEABLE | | 345650003 |
| MX123 CONN ASSY 73 CKT BLU OPT0 KEY C/38 | 345668983 | C-HSG-C0 | G-CAP-0-P | TPA-C0 | RS | LS | MAL | CPA | MSEAL | RSEAL | 72 - - 69 68 - - 65 - 63 62 - - 59 58 - 56 55 - 53<br>- - - - - - 46 - - 43 42 - 40 39 38 - 36 35 - -<br>-<br>- 31 30 29 - - 26 - 24 23 22 21 20 19 - -<br>- - - - - - - - - - 6 5 4 3 2 1 | SALEABLE | | 345650003 |
| MX123 CONN ASSY 73 CKT GRY OPT0 KEY B/12 | 345668993 | C-HSG-B0 | G-CAP-0-P | TPA-B0 | RS | LS | MAL | CPA | MSEAL | RSEAL | 72 71 70 69 68 67 - 65 64 63 - 61 60 59 - 57 56 55 54 53<br>52 51 50 49 48 47 46 45 44 43 42 - 40 39 - - 36 35 34 33<br>-<br>32 31 30 29 28 27 26 25 24 23 22 21 20 - - -<br>16 15 14 13 12 11 10 9 8 7 6 - 4 3 2 - | SALEABLE | | 345650003 |
| MX123 CONN ASSY 73 CKT GRY OPT0 KEY B/50 | 345669003 | C-HSG-B0 | G-CAP-0-P | TPA-B0 | RS | LS | MAL | CPA | MSEAL | RSEAL | 72 71 70 - - 67 - 65 64 63 62 61 60 - 58 - 56 - 54 -<br>52 51 50 - - 47 - 45 - 43 42 41 40 - 38 - 36 - 34 -<br>-<br>32 31 30 - - 27 26 25 24 - 22 - 20 19 - 17<br>16 15 14 13 12 - - 9 8 - 6 5 4 3 2 1 | SALEABLE | | 345650003 |

| ASSEMBLY DESCRIPTION | ASSEMBLY PART NUMBER | CONNECTOR HOUSING | GROMMET CAP | TPA | RIGHT SLIDE | LEFT SLIDE | MATE ASSIST LEVER | CPA | MAT SEAL | RING SEAL | BLOCKED TERMINALS<br>CAVITY WITH A NUMBER INDICATES BLOCKED TERMINAL POSITION<br>CAVITY WITHOUT A NUMBER INDICATES OPEN TERMINAL POSITION | STATUS | COMMENTS | INTEGRAL COMPONENTS SOLD SEPARATELY<br>DRESS COVER |
|---|---|---|---|---|---|---|---|---|---|---|---|---|---|---|
| MX123 CONN ASSY 73 CKT BLK OPT0 KEY A/29 | 345669013 | C-HSG-A0 | G-CAP-0-P | TPA-A0 | RS | LS | MAL | CPA | MSEAL | RSEAL | 72 71 70 - - 67 66 - - - - - - 59 58 57 56 55 54 53<br>52 51 50 - - 47 46 - - - - - - 39 - 37 36 35 - 33<br>- 32 31 30 29 28 27 26 - - - - 21 - - 18 17<br>- 16 15 14 13 12 11 10 - 8 7 - - - 3 2 1 | SALEABLE | | 345650003 |
| MX123 CONN ASSY 73 CKT GRY OPT0 KEY B/18 | 345669023 | C-HSG-B0 | G-CAP-0-P | TPA-B0 | RS | LS | MAL | CPA | MSEAL | RSEAL | 72 71 70 69 68 67 66 65 64 63 - 61 60 - 58 57 56 55 54 53<br>52 51 50 49 48 47 46 45 44 43 - - 40 - - 37 36 35 34 33<br>- 32 - 30 29 28 - 26 25 24 - - 21 - 19 - -<br>- 16 - 14 13 12 11 10 9 8 - 6 5 - - 2 1 | SALEABLE | | 345650003 |
| MX123 CONN ASSY 73 CKT BLU OPT0 KEY C/43 | 345669033 | C-HSG-C0 | G-CAP-0-P | TPA-C0 | RS | LS | MAL | CPA | MSEAL | RSEAL | - 71 - 69 68 - 66 65 64 - 62 61 - - - - - - 54 53<br>- - - - 48 - - - - 43 42 41 40 - - 37 36 35 - 33<br>- 32 - - - - 27 - - - - - - 20 19 18 -<br>- - - - - - 11 10 - - - - - 4 3 2 1 | SALEABLE | | 345650003 |
| MX123 CONN ASSY 73 CKT BLU OPT0 KEY C/40 | 345669043 | C-HSG-C0 | G-CAP-0-P | TPA-C0 | RS | LS | MAL | CPA | MSEAL | RSEAL | - - - - 68 - - - - 63 62 61 60 59 58 57 56 55 - 53<br>- - - - 48 - - - - 43 42 41 40 - - 37 36 35 34 33<br>- 32 31 - - - 27 - - - - - - 20 19 18 -<br>- - - - - - 11 10 - - - - - 4 3 2 1 | SALEABLE | | 345650003 |
| MX123 CONN ASSY 73 CKT BLU OPT0 KEY C/49 | 345669053 | C-HSG-C0 | G-CAP-0-P | TPA-C0 | RS | LS | MAL | CPA | MSEAL | RSEAL | - - - - - 67 - - - 63 62 - - 59 58 - - 55 - -<br>- - - - - 47 - - - - - 41 - - - - - 35 - -<br>- 32 - - - - 27 26 25 24 - - - - 19 18 17<br>- 16 - - - - 11 10 9 8 - - - - 3 - 1 | SALEABLE | | 345650003 |
| MX123 CONN ASSY 73 CKT GRY OPT0 KEY B/26 | 345669063 | C-HSG-B0 | G-CAP-0-P | TPA-B0 | RS | LS | MAL | CPA | MSEAL | RSEAL | - 71 70 69 - 67 66 65 64 63 - - - - 58 57 56 - 54 53<br>- 51 50 49 48 47 - 45 - - 42 - - 39 38 37 36 35 34 33<br>- 32 31 30 29 28 27 26 25 24 23 - - - - - -<br>- - - - 13 12 11 10 9 - 7 - 5 - 3 2 1 | SALEABLE | | 345650003 |
| MX123 CONN ASSY 73 CKT GRY OPT0 KEY B/64 | 345669073 | C-HSG-B0 | G-CAP-0-P | TPA-B0 | RS | LS | MAL | CPA | MSEAL | RSEAL | - - - - - - - - - - 62 - - - 58 - - - 54 53<br>- - - - - - - - - - 42 - - - - - - - - -<br>- - - - - - - 27 - 25 - - - - - - - -<br>- - - - - - - 11 10 - - - - - - - - - | SALEABLE | | 345650003 |
| MX123 CONN ASSY 73 CKT BLK OPT0 KEY A/36 | 345669083 | C-HSG-A0 | G-CAP-0-P | TPA-A0 | RS | LS | MAL | CPA | MSEAL | RSEAL | - 71 - 69 68 - 66 65 64 - 62 61 - - - - - - 54 53<br>- - 50 49 - - - 45 44 - - 41 - - - - - - 34 33<br>- 32 31 30 29 - - 26 25 24 23 - - 20 19 - -<br>- 16 15 14 13 - - 10 - 8 - 6 5 4 3 - - | SALEABLE | | 345650003 |
| MX123 CONN ASSY 73 CKT BLK OPT0 KEY A/35 | 345669093 | C-HSG-A0 | G-CAP-0-P | TPA-A0 | RS | LS | MAL | CPA | MSEAL | RSEAL | - 71 - 69 68 - 66 65 64 - 62 61 - - - - - - 54 53<br>- - 50 49 - - - 45 44 - - 41 - - - - - - 34 33<br>- 32 31 30 29 - - 26 25 24 23 - - 20 19 - -<br>- 16 15 14 13 - - 10 - 8 7 6 5 4 3 - - | SALEABLE | | 345650003 |
| MX123 CONN ASSY 73 CKT BLK OPT0 KEY A/30 | 345669103 | C-HSG-A0 | G-CAP-0-P | TPA-A0 | RS | LS | MAL | CPA | MSEAL | RSEAL | 72 71 70 69 - 67 66 - 64 - 62 - 60 - - 57 - 55 54 -<br>- - - 49 48 - 46 45 44 43 42 - 40 39 - - - - - -<br>- - - - - - 26 - - - - - - - - -<br>- - - - - - - - 8 7 6 5 4 3 2 - | SALEABLE | | 345650003 |
| MX123 CONN ASSY 73 CKT BLK OPT0 KEY A/50 | 345669113 | C-HSG-A0 | G-CAP-0-P | TPA-A0 | RS | LS | MAL | CPA | MSEAL | RSEAL | - - - - - 67 - - - 63 62 - - 59 58 - - 55 - -<br>- - - - - 47 - - - - - 41 - - - - - 35 - -<br>- 32 - - - - 27 26 25 24 - - - - 19 18 17<br>- 16 - - - - 11 - 9 8 - - - - 3 - 1 | SALEABLE | | 345650003 |
| MX123 CONN ASSY 73 CKT NAT OPT9 KEY F/57 | 345669143 | C-HSG-F9 | G-CAP-9-P | TPA-F9 | RS | LS | MAL | CPA | MSEAL | RSEAL | - - - 69 68 - - - - - - - - - 58 57 - - - -<br>- - - - - - - - - 43 42 - - - 38 37 - - - 33<br>- - - 30 - - - - - - - - - - - 19 18 17<br>- - - - - - - - - - - - - - 3 2 1 | SALEABLE | | 345650003 |

| ASSEMBLY DESCRIPTION | ASSEMBLY PART NUMBER | CONNECTOR HOUSING | GROMMET CAP | TPA | RIGHT SLIDE | LEFT SLIDE | MATE ASSIST LEVER | CPA | MAT SEAL | RING SEAL | BLOCKED TERMINALS<br>CAVITY WITH A NUMBER INDICATES BLOCKED TERMINAL POSITION<br>CAVITY WITHOUT A NUMBER INDICATES OPEN TERMINAL POSITION | STATUS | COMMENTS | INTEGRAL COMPONENTS SOLD SEPARATELY<br>DRESS COVER |
|---|---|---|---|---|---|---|---|---|---|---|---|---|---|---|
| MX123 CONN ASSY 73 CKT GRY OPT9 KEY B/14 | 345669153 | C-HSG-B9 | G-CAP-9-P | TPA-B9 | RS | LS | MAL | CPA | MSEAL | RSEAL | 72 71 70 69 68 67 - 65 64 63 - 61 60 59 - 57 56 55 54 53<br>52 51 50 49 48 47 46 45 44 43 42 - 40 39 - - 36 35 34 33<br>- 32 31 30 29 28 27 26 25 24 23 22 21 - - - -<br>- 16 15 14 13 12 11 10 9 - 7 6 - 4 3 2 - | SALEABLE | | 345650003 |
| MX123 CONN ASSY 73 CKT GRY OPT9 KEY B/30 | 345669163 | C-HSG-B9 | G-CAP-9-P | TPA-B9 | RS | LS | MAL | CPA | MSEAL | RSEAL | 72 71 70 69 - - - - 64 63 - 61 - - 58 57 56 55 - -<br>52 51 50 49 - - - - 43 - - - - - 38 37 36 - - 33<br>- 32 - 30 29 28 - 26 25 24 23 22 21 20 - - -<br>- 16 - 14 13 12 11 10 9 8 7 6 5 4 - - - |
| MX123 CONN ASSY 73 CKT GRY OPT0 KEY B/12 | 345669173 | C-HSG-B0 | G-CAP-0-P | TPA-B0 | RS | LS | MAL | CPA | MSEAL | RSEAL | 72 71 70 69 68 67 66 - 64 63 - 61 60 59 - 57 56 55 54 53<br>52 51 50 49 48 47 46 45 44 43 42 - 40 39 - - 36 35 34 33<br>- 32 31 30 29 28 27 26 25 24 23 22 21 20 - - -<br>- 16 15 14 13 12 11 10 9 8 7 6 - 4 3 2 - |
| MX123 CONN ASSY 73 CKT GRY OPT9 KEY B/62 | 345669183 | C-HSG-B9 | G-CAP-9-P | TPA-B9 | RS | LS | MAL | CPA | MSEAL | RSEAL | - - - - - - 66 - - - - - - - 58 - - - - -<br>- - - - - - - - - - - 41 - - 38 37 - - - -<br>- - - - - - - - - - - - - - - 20 - 18 17<br>- - - - - - - - - 8 - - 5 - - - 1 |
| MX123 CONN ASSY 73 CKT NAT OPT9 KEY F/18 | 345669193 | C-HSG-F9 | G-CAP-9-P | TPA-F9 | RS | LS | MAL | CPA | MSEAL | RSEAL | 72 71 70 - - 67 66 65 64 63 62 61 60 59 - - 56 55 54 53<br>52 51 50 49 48 47 46 45 44 - - 41 40 39 - - 36 35 34 -<br>- 32 31 - 29 28 27 26 25 24 23 22 21 20 - - -<br>- 16 15 14 13 12 11 10 9 - 7 6 5 4 - - - |
| MX123 CONN ASSY 73 CKT BLK OPT0 KEY A/24 | 345669203 | C-HSG-A0 | G-CAP-0-P | TPA-A0 | RS | LS | MAL | CPA | MSEAL | RSEAL | - - - - - - - 65 - - - 61 - - 58 57 56 - - -<br>- 51 50 - - 47 46 45 - - - 41 - - - 37 36 - - -<br>- 32 31 - - - - 26 25 - - 22 21 20 - - -<br>- - 15 14 - - - 10 - - - - - - - - - |
| MX123 CONN ASSY 73 CKT GRY OPT0 KEY B/46 | 345669213 | C-HSG-B0 | G-CAP-0-P | TPA-B0 | RS | LS | MAL | CPA | MSEAL | RSEAL | 72 71 70 69 - - - - - 63 62 61 60 - - - 56 - - -<br>52 - - - - 47 - - 44 - - - - - - - 36 - 34 -<br>- - - - 29 28 27 - 25 - - - 21 - 19 18 17<br>- 15 14 - 12 11 - - - - - - - - - 1 |
| MX123 CONN ASSY 73 CKT GRY OPT9 KEY B/30 | 345669223 | C-HSG-B9 | G-CAP-9-P | TPA-B9 | RS | LS | MAL | CPA | MSEAL | RSEAL | - 71 70 69 68 67 66 65 64 63 - - - - 58 57 56 - 54 53<br>- 51 50 49 - - - 45 44 43 42 - - 39 - - - - 34 33<br>- 32 31 - 29 28 27 26 25 24 23 - - - - - 17<br>- - - - 13 12 11 10 9 8 7 - 5 - - 2 - |
| MX123 CONN ASSY 73 CKT BLU OPT9 KEY C/40 | 345669233 | C-HSG-C9 | G-CAP-9-P | TPA-C9 | RS | LS | MAL | CPA | MSEAL | RSEAL | 72 - 70 69 68 - 66 - - 63 62 - - - 58 - 56 55 - 53<br>- - - 49 - - 46 - - 43 42 - 40 - 38 - 36 35 - -<br>- - 31 30 29 - - 26 - 24 - 22 21 20 19 - 17<br>- - - - - - - - - - - - - 4 3 2 1 |
| MX123 CONN ASSY 73 CKT GRY OPT9 KEY B/44 | 345669243 | C-HSG-B9 | G-CAP-9-P | TPA-B9 | RS | LS | MAL | CPA | MSEAL | RSEAL | - - - - 68 67 66 65 - - 62 - 60 59 - - - - 54 53<br>- - - - 48 47 46 45 44 - 42 41 40 39 - - - 35 34 -<br>- 31 - - - 27 - - - - - - - - 19 18 17<br>- 15 - - - - - - - - - - - - 3 2 1 |
| MX123 CONN ASSY 73 CKT GRY OPT9 KEY B/61 | 345669253 | C-HSG-B9 | G-CAP-9-P | TPA-B9 | RS | LS | MAL | CPA | MSEAL | RSEAL | - - - - - - 66 - - - - - - - 58 - - - - -<br>- - - - - - - - - - - 41 - - 38 37 - - - -<br>- - - - - - - - - - - - - - - 20 19 18 17<br>- - - - - - - - - 8 - - 5 - - - 1 |
| MX123 CONN ASSY 73 CKT GRY OPT9 KEY B/22 | 345669263 | C-HSG-B9 | G-CAP-9-P | TPA-B9 | RS | LS | MAL | CPA | MSEAL | RSEAL | - 71 70 69 - 67 66 65 64 63 - - - - 58 57 56 - 54 53<br>- 51 50 49 48 47 - 45 44 - 42 - - 39 38 37 36 35 34 33<br>- 32 31 30 29 28 27 26 25 24 23 - - - 19 18 17<br>- - - 13 12 11 10 9 - 7 - 5 - 3 2 1 |

| ASSEMBLY DESCRIPTION | ASSEMBLY PART NUMBER | CONNECTOR HOUSING | GROMMET CAP | TPA | RIGHT SLIDE | LEFT SLIDE | MATE ASSIST LEVER | CPA | MAT SEAL | RING SEAL | BLOCKED TERMINALS<br>CAVITY WITH A NUMBER INDICATES BLOCKED TERMINAL POSITION<br>CAVITY WITHOUT A NUMBER INDICATES OPEN TERMINAL POSITION | STATUS | COMMENTS | INTEGRAL COMPONENTS SOLD SEPARATELY<br>DRESS COVER |
|---|---|---|---|---|---|---|---|---|---|---|---|---|---|---|
| MX123 CONN ASSY 73 CKT GRY OPT9 KEY B/57 | 345669273 | C-HSG-B9 | G-CAP-9-P | TPA-B9 | RS | LS | MAL | CPA | MSEAL | RSEAL | - - - - - - 66 - - - 62 - - - 58 - - - - -<br>52 51 - - - - - 45 - - - 41 - - 38 37 - - - -<br>- - - - - - - - - - - - - - - - 20 19 18 17<br>- - - - - - - - 8 - - 5 - - - 1 | SALEABLE | | 345650003 |
| MX123 CONN ASSY 73 CKT BLK OPT0 KEY A/14 | 345669303 | C-HSG-A0 | G-CAP-0-P | TPA-A0 | RS | LS | MAL | CPA | MSEAL | RSEAL | - - 70 - - - - 65 - - - 61 60 - - - - - - -<br>- - - - - - - 45 - - - 41 40 - - - - - - -<br>- - - - 28 - 26 25 - - - - - - 18 -<br>16 - - - - - 10 - - - - - - - - - | SALEABLE | | 345650003 |
| MX123 CONN ASSY 73 CKT BLK OPT9 KEY A/33 | 345669313 | C-HSG-A9 | G-CAP-9-P | TPA-A9 | RS | LS | MAL | CPA | MSEAL | RSEAL | - 71 70 69 68 67 66 65 - 63 - - 60 59 - - - - - -<br>- - 50 49 - 47 - - 44 - 42 - - 39 38 - 36 35 34 33<br>- 31 - - 28 - 26 - 24 23 22 21 - 19 18 17<br>- - 14 - 12 - - - 8 7 6 5 - 3 2 1 | SALEABLE | | 345650003 |
| MX123 CONN ASSY 73 CKT BLK OPT9 KEY A/37 | 345669323 | C-HSG-A9 | G-CAP-9-P | TPA-A9 | RS | LS | MAL | CPA | MSEAL | RSEAL | - 71 70 69 68 67 66 65 - 63 - - 60 - - - - - - -<br>- - 50 49 - 47 - - 44 - 42 - - 39 38 - 36 - - 33<br>- 31 - - 28 - 26 - 24 23 22 21 - 19 18 17<br>- - 14 - 12 - - - 8 7 6 5 - - 2 1 | SALEABLE | | 345650003 |
| MX123 CONN ASSY 73 CKT BLK OPT9 KEY A/35 | 345669333 | C-HSG-A9 | G-CAP-9-P | TPA-A9 | RS | LS | MAL | CPA | MSEAL | RSEAL | - 71 70 69 68 67 66 65 - 63 - - 60 - - - - - - 53<br>- - 50 49 - 47 - - 44 - 42 - - 39 38 - 36 - - 33<br>- 31 - - 28 - 26 - 24 23 22 21 - 19 18 17<br>- - 14 - 12 - - - 8 7 6 5 - 3 2 1 | SALEABLE | | 345650003 |
| MX123 CONN ASSY 73 CKT BLU OPT9 KEY C/34 | 345669343 | C-HSG-C9 | G-CAP-9-P | TPA-C9 | RS | LS | MAL | CPA | MSEAL | RSEAL | - 71 - - - 67 - 65 64 - - 61 60 59 - 57 - - 54 -<br>52 51 50 - 48 47 - 45 44 - - 41 - 39 - 37 - - 34 33<br>- 32 - - - 28 27 - 25 - 23 - - - - 18 -<br>- 16 15 14 13 12 11 10 9 8 7 6 5 - - - - | SALEABLE | | 345650003 |
| MX123 CONN ASSY 73 CKT BLK OPT9 KEY A/35 | 345669353 | C-HSG-A9 | G-CAP-9-P | TPA-A9 | RS | LS | MAL | CPA | MSEAL | RSEAL | - 71 70 69 68 67 66 65 - 63 - - 60 59 - - - - - -<br>- - 50 49 - 47 - - 44 - 42 - - 39 38 - 36 - - 33<br>- 31 - - 28 - 26 - 24 23 22 21 - 19 18 17<br>- - 14 - 12 - - - 8 7 6 5 - 3 2 1 | SALEABLE | | 345650003 |
| MX123 CONN ASSY 73 CKT BLK OPT9 KEY A/32 | 345669363 | C-HSG-A9 | G-CAP-9-P | TPA-A9 | RS | LS | MAL | CPA | MSEAL | RSEAL | - 71 70 69 68 67 66 65 - 63 - - 60 59 58 - - - - -<br>- - 50 49 48 47 - - 44 - 42 41 - 39 38 - 36 - - 33<br>- 31 - - 28 - 26 - 24 23 22 21 - 19 18 17<br>- - 14 - 12 - - - 8 7 6 5 - 3 2 1 | SALEABLE | | 345650003 |
| MX123 CONN ASSY 73 CKT BLK OPT9 KEY A/59 | 345669383 | C-HSG-A9 | G-CAP-9-P | TPA-A9 | RS | LS | MAL | CPA | MSEAL | RSEAL | - - - - - 67 66 65 - - - - 60 - - - - - - -<br>- - - 49 - - - - - - 42 - - - - - 36 - - -<br>- 31 - - 28 - - - - 23 22 21 - - - -<br>- - - - - - - - - - 6 5 - - - - | SALEABLE | | 345650003 |
| MX123 CONN ASSY 73 CKT GRY OPT0 KEY B/62 | 345669393 | C-HSG-B0 | G-CAP-0-P | TPA-B0 | RS | LS | MAL | CPA | MSEAL | RSEAL | - - - - - - 66 - - - 62 - - - 58 - - - - -<br>- - - - - - - - - - - 41 - - 38 37 - - - -<br>- - - - - - - - - - - - - - - 19 18 17<br>- - - - - - - - - - - - - 5 - - - 1 | SALEABLE | | 345650003 |
| MX123 CONN ASSY 73 CKT GRY OPT0 KEY B/32 | 345669403 | C-HSG-B0 | G-CAP-0-P | TPA-B0 | RS | LS | MAL | CPA | MSEAL | RSEAL | 72 71 70 69 - - - - 64 63 62 61 60 - - - 56 55 - -<br>52 - - - - 47 - - 44 - - - - - - - 36 - 34 -<br>- - - 29 28 27 - 25 - - - 21 - 19 18 17<br>- 15 14 - 12 11 - - - - - - - 3 2 1 | SALEABLE | | 345650003 |
| MX123 CONN ASSY 73 CKT BLK OPT0 KEY A/43 | 345669423 | C-HSG-A0 | G-CAP-0-P | TPA-A0 | RS | LS | MAL | CPA | MSEAL | RSEAL | - - - 69 68 - - 65 64 63 62 61 60 59 - - - - - -<br>- - - 49 48 - - 45 44 43 42 41 40 - 38 - - - 34 -<br>- - - - - - - 25 24 23 22 21 20 19 - -<br>- - - - - - - 9 - - 6 5 4 - - - | SALEABLE | | 345650003 |

| ASSEMBLY DESCRIPTION | ASSEMBLY PART NUMBER | CONNECTOR HOUSING | GROMMET CAP | TPA | RIGHT SLIDE | LEFT SLIDE | MATE ASSIST LEVER | CPA | MAT SEAL | RING SEAL | BLOCKED TERMINALS<br>CAVITY WITH A NUMBER INDICATES BLOCKED TERMINAL POSITION<br>CAVITY WITHOUT A NUMBER INDICATES OPEN TERMINAL POSITION | STATUS | COMMENTS | INTEGRAL COMPONENTS SOLD SEPARATELY<br>DRESS COVER |
|---|---|---|---|---|---|---|---|---|---|---|---|---|---|---|
| MX123 CONN ASSY 73 CKT GRY OPT0 KEY B/53 | 345669433 | C-HSG-B0 | G-CAP-0-P | TPA-B0 | RS | LS | MAL | CPA | MSEAL | RSEAL | - - - - - - - - - - 62 - 60 59 - - - - - -<br>- - - - - - - - - 43 42 41 - - 38 - - - - -<br>-<br>32 31 - - - - - - - 23 22 - 20 19 18 17<br>- 15 - - - 11 - - - 7 - - 4 3 - - | SALEABLE | | 345650003 |
| MX123 CONN ASSY 73 CKT GRY OPT9 KEY B/58 | 345669443 | C-HSG-B9 | G-CAP-9-P | TPA-B9 | RS | LS | MAL | CPA | MSEAL | RSEAL | - - - - - - 66 - - - - - - - 58 - - - - -<br>52 51 - - - - - 45 - - - 41 - - 38 37 - - - -<br>-<br>- - - - - - - - - - - - - 20 19 18 17<br>- - - - - - - - 8 - - 5 - - - 1 | SALEABLE | | 345650003 |
| MX123 CONN ASSY 73 CKT BLK OPT0 KEY A/50 | 345669453 | C-HSG-A0 | G-CAP-0-P | TPA-A0 | RS | LS | MAL | CPA | MSEAL | RSEAL | - - - - 68 - 66 65 - 63 62 - - - 58 - - - - -<br>- - 50 49 - 47 46 - - 43 42 - - - - - - - - 33<br>-<br>32 - - - 28 - - - 24 23 - 21 20 - - 17<br>- - - - - - - - - - - - 4 3 - 1 | SALEABLE | | 345650003 |
| MX123 CONN ASSY 73 CKT BLK OPT0 KEY A/31 | 345669503 | C-HSG-A0 | G-CAP-0-P | TPA-A0 | RS | LS | MAL | CPA | MSEAL | RSEAL | - - - - - 67 66 - - - 62 - 60 - - - - 55 54 53<br>- - 50 - 48 - 46 45 44 43 42 - 40 39 - - - 35 - -<br>-<br>- - - - - - 26 25 - - 22 21 - - - -<br>- 15 14 - - - - - 8 7 6 5 4 3 2 - | SALEABLE | | 345650003 |
| MX123 CONN ASSY 73 CKT BLK OPT0 KEY A/35 | 345669543 | C-HSG-A0 | G-CAP-0-P | TPA-A0 | RS | LS | MAL | CPA | MSEAL | RSEAL | 72 71 70 69 68 67 66 65 64 63 62 61 60 59 58 57 56 55 54 53<br>52 51 50 - - - - - - - 42 41 - 39 - - - 35 - 33<br>-<br>- - 30 - - - 26 - - - - 21 - - - -<br>- - 14 13 - 11 - - 8 7 - - 4 3 - - | SALEABLE | | 345650003 |
| MX123 CONN ASSY 73 CKT BLU OPT0 KEY C/55 | 345669553 | C-HSG-C0 | G-CAP-0-P | TPA-C0 | RS | LS | MAL | CPA | MSEAL | RSEAL | 72 71 70 69 68 67 - - - - - 61 - - 58 - - - - -<br>- - - - - - - - 44 43 - 41 40 - 38 - - - - -<br>-<br>- 31 - - - - - - - - - 21 20 - - -<br>- - - - - - - - - - - 5 4 - - - | SALEABLE | | 345650003 |
| MX123 CONN ASSY 73 CKT BLU OPT0 KEY C/47 | 345669563 | C-HSG-C0 | G-CAP-0-P | TPA-C0 | RS | LS | MAL | CPA | MSEAL | RSEAL | - - - - 68 - - - - 63 62 61 - 59 58 57 - 55 - 53<br>- - - - - - - - - 43 42 41 - - - 37 36 35 - 33<br>-<br>32 - - 29 - 27 - - - - - - - 19 18 -<br>- - - - - 11 10 - - - - - - 3 2 1 | SALEABLE | | 345650003 |
| MX123 CONN ASSY 73 CKT GRY OPT0 KEY B/61 | 345669573 | C-HSG-B0 | G-CAP-0-P | TPA-B0 | RS | LS | MAL | CPA | MSEAL | RSEAL | - - - - - - 66 - - - 62 - - - 58 - - - - -<br>- - - - - - - - - - 41 - - 38 37 - - - -<br>-<br>- - - - - - - - - - - 20 19 18 17<br>- - - - - - - - - - - 5 - - - 1 | SALEABLE | | 345650003 |
| MX123 CONN ASSY 73 CKT GRY OPT0 KEY B/65 | 345669583 | C-HSG-B0 | G-CAP-0-P | TPA-B0 | RS | LS | MAL | CPA | MSEAL | RSEAL | - - - - - - - - - - 62 - - - 58 - - - - 53<br>- - - - - - - - - - 42 - - - - - - - - -<br>-<br>- - - - - 27 - 25 - - - - - - - -<br>- - - - - 11 10 - - - - - - - - - | SALEABLE | | 345650003 |
| MX123 CONN ASSY 73 CKT BLK OPT0 KEY A/33 | 345669593 | C-HSG-A0 | G-CAP-0-P | TPA-A0 | RS | LS | MAL | CPA | MSEAL | RSEAL | - 71 - 69 68 - 66 65 64 - 62 61 - - - - - - 54 53<br>- - 50 49 - - 46 45 44 - - 41 - - - - - - 34 33<br>-<br>32 31 30 29 - - 26 25 24 23 22 21 20 19 - -<br>16 15 14 13 - - 10 - 8 - 6 5 4 3 - - | SALEABLE | | 345650003 |
| MX123 CONN ASSY 73 CKT BLK OPT0 KEY A/28 | 345669603 | C-HSG-A0 | G-CAP-0-P | TPA-A0 | RS | LS | MAL | CPA | MSEAL | RSEAL | 72 - - - - 67 - - - - 62 - 60 - - - - 55 54 53<br>- 51 - - 48 - 46 45 44 43 42 - 40 39 - - - - - -<br>-<br>- - - - - - 26 25 - - 22 21 - - - -<br>- - - - - - - - 8 7 6 5 4 3 2 - | SALEABLE | | 345650003 |
| MX123 CONN ASSY 73 CKT BLU OPT0 KEY C/45 | 345669613 | C-HSG-C0 | G-CAP-0-P | TPA-C0 | RS | LS | MAL | CPA | MSEAL | RSEAL | 72 - - - 68 - - - - 63 62 61 - 59 58 57 - 55 54 53<br>- - - - 48 - - - - 43 42 41 - - 38 37 36 35 - 33<br>-<br>32 - - 29 - 27 - - - - - - - - - -<br>- - - - - 11 10 - - - - - - 3 2 1 | SALEABLE | | 345650003 |

| ASSEMBLY DESCRIPTION | ASSEMBLY PART NUMBER | CONNECTOR HOUSING | GROMMET CAP | TPA | RIGHT SLIDE | LEFT SLIDE | MATE ASSIST LEVER | CPA | MAT SEAL | RING SEAL | BLOCKED TERMINALS<br>CAVITY WITH A NUMBER INDICATES BLOCKED TERMINAL POSITION<br>CAVITY WITHOUT A NUMBER INDICATES OPEN TERMINAL POSITION | STATUS | COMMENTS | INTEGRAL COMPONENTS SOLD SEPARATELY<br>DRESS COVER |
|---|---|---|---|---|---|---|---|---|---|---|---|---|---|---|
| MX123 CONN ASSY 73 CKT GRY OPT9 KEY B/40 | 345669623 | C-HSG-B9 | G-CAP-9-P | TPA-B9 | RS | LS | MAL | CPA | MSEAL | RSEAL | - - - 69 68 67 66 65 - - 62 - 60 59 - - - - 54 53<br>- - - 49 48 47 46 45 44 - 42 41 40 39 - - - 35 34 33<br>- - 31 - - - 27 - - - - - - - 19 18 17<br>- - 15 - - 12 - - - - - - - 3 2 1 | SALEABLE | | 345650003 |
| MX123 CONN ASSY 73 CKT GRY OPT9 KEY B/60 | 345669633 | C-HSG-B9 | G-CAP-9-P | TPA-B9 | RS | LS | MAL | CPA | MSEAL | RSEAL | - - - - - - 66 - - - 62 - - - 58 - - - - -<br>- - - - - - - - - - - 41 - - 38 37 - - - -<br>- - - - - - - - - - - - - - - 19 18 17<br>- - - - - - - - - - - 8 - - 5 4 - - 1 | SALEABLE | | 345650003 |
| MX123 CONN ASSY 73 CKT BLK OPT9 KEY A/20 | 345669643 | C-HSG-A9 | G-CAP-9-P | TPA-A9 | RS | LS | MAL | CPA | MSEAL | RSEAL | 72 71 70 - 68 67 66 65 - - 62 - 60 - 58 57 56 55 54 53<br>- 51 50 49 - 47 46 45 - - 42 - 40 - - 37 36 - - 33<br>32 31 - - 28 27 26 25 24 23 22 21 20 19 18 17<br>16 15 14 13 12 11 - 9 8 7 6 - 4 3 - 1 | SALEABLE | | 345650003 |
| MX123 CONN ASSY 73 CKT GRY OPT0 KEY B/52 | 345669663 | C-HSG-B0 | G-CAP-0-P | TPA-B0 | RS | LS | MAL | CPA | MSEAL | RSEAL | - - - - - - - - - 62 - 60 59 - - - - - -<br>- - - - - - - - - 43 42 41 - 39 38 - - - - -<br>- 31 - - - 27 - - - 23 22 - 20 19 18 17<br>- 15 - - - 11 - - - 7 - - 4 3 - - | SALEABLE | | 345650003 |
| MX123 CONN ASSY 73 CKT BLU OPT0 KEY C/46 | 345669673 | C-HSG-C0 | G-CAP-0-P | TPA-C0 | RS | LS | MAL | CPA | MSEAL | RSEAL | - - - - 68 - - - - 63 62 61 - 59 58 57 - 55 - 53<br>- - - - 48 - - - - 43 42 41 - - - 37 36 35 - 33<br>32 - - 29 - 27 - - - - - - - 19 18 -<br>- - - - - 11 10 - - - - - - 3 2 1 | SALEABLE | | 345650003 |
| MX123 CONN ASSY 73 CKT GRY OPT0 KEY B/60 | 345669683 | C-HSG-B0 | G-CAP-0-P | TPA-B0 | RS | LS | MAL | CPA | MSEAL | RSEAL | - - - - - - - - - - 62 - - 59 58 - - - - 53<br>- - - - - - - - - - 42 - - 39 - - - - 34 -<br>- - - - - 27 - 25 - - - - - - 18 -<br>- - - - - 11 10 - - - - - - - 2 - | SALEABLE | | 345650003 |
| MX123 CONN ASSY 73 CKT BLK OPT0 KEY A/32 | 345669693 | C-HSG-A0 | G-CAP-0-P | TPA-A0 | RS | LS | MAL | CPA | MSEAL | RSEAL | - 71 - 69 68 - 66 65 64 - 62 61 - - - - - - 54 -<br>- - 50 49 - - 46 45 44 - - 41 - - - - - - 34 -<br>32 31 30 29 - 27 26 25 24 23 22 21 20 19 - -<br>16 15 14 13 - - 10 9 8 7 6 5 4 3 - - | SALEABLE | | 345650003 |
| MX123 CONN ASSY 73 CKT BLK OPT0 KEY A/30 | 345669703 | C-HSG-A0 | G-CAP-0-P | TPA-A0 | RS | LS | MAL | CPA | MSEAL | RSEAL | - - - - - 67 66 - - - 62 - 60 - 58 - - 55 54 53<br>- - - - 48 - 46 45 44 43 42 - 40 39 - - - 35 - -<br>- - - - - - 26 25 - - 22 21 - - - 17<br>- 15 14 - - - - - 8 7 6 5 4 - - - | SALEABLE | | 345650003 |
| MX123 CONN ASSY 73 CKT GRY OPT0 KEY B/45 | 345669713 | C-HSG-B0 | G-CAP-0-P | TPA-B0 | RS | LS | MAL | CPA | MSEAL | RSEAL | 72 71 70 69 - - - - - 63 62 61 60 - - - 56 - - -<br>52 - - - - 47 - - 44 - - 41 - - - - 36 - 34 -<br>- - - 29 28 27 - 25 - - - 21 - 19 18 17<br>- 15 14 - 12 11 - - - - - - - - - 1 | SALEABLE | | 345650003 |
| MX123 CONN ASSY 73 CKT GRY OPT0 KEY B/47 | 345669723 | C-HSG-B0 | G-CAP-0-P | TPA-B0 | RS | LS | MAL | CPA | MSEAL | RSEAL | - - - - - - - - - - 62 - 60 59 - - - - 54 53<br>- - - - - - - - 44 - 42 41 - 39 38 - - 35 34 33<br>- 31 - - - 27 - - - 23 22 - 20 - 18 17<br>- 15 - - - - - - - 7 - - 4 3 2 1 | SALEABLE | | 345650003 |
| MX123 CONN ASSY 73 CKT BLK OPT0 KEY A/32 | 345669733 | C-HSG-A0 | G-CAP-0-P | TPA-A0 | RS | LS | MAL | CPA | MSEAL | RSEAL | - - - 69 68 - - 65 64 63 62 61 60 - 58 57 56 55 54 -<br>- - - 49 48 - - 45 44 43 42 41 40 - 38 - 36 - 34 -<br>32 31 - - - - - 25 24 23 22 - 20 19 18 -<br>- 15 14 - 12 - - 9 - - 6 5 4 - 2 - | SALEABLE | | 345650003 |
| MX123 CONN ASSY 73 CKT GRY OPT0 KEY B/57 | 345669743 | C-HSG-B0 | G-CAP-0-P | TPA-B0 | RS | LS | MAL | CPA | MSEAL | RSEAL | - - - - - - 66 - - - 62 - - - 58 - - - - -<br>52 51 - - - - - 45 - - - 41 - - 38 37 - - - -<br>- - - - - - - - - - - - - 20 19 18 17<br>- - - - - - - - - - - - 5 4 - - 1 | SALEABLE | | 345650003 |

| ASSEMBLY DESCRIPTION | ASSEMBLY PART NUMBER | CONNECTOR HOUSING | GROMMET CAP | TPA | RIGHT SLIDE | LEFT SLIDE | MATE ASSIST LEVER | CPA | MAT SEAL | RING SEAL | BLOCKED TERMINALS<br>CAVITY WITH A NUMBER INDICATES BLOCKED TERMINAL POSITION<br>CAVITY WITHOUT A NUMBER INDICATES OPEN TERMINAL POSITION | STATUS | COMMENTS | INTEGRAL COMPONENTS SOLD SEPARATELY<br>DRESS COVER |
|---|---|---|---|---|---|---|---|---|---|---|---|---|---|---|
| MX123 CONN ASSY 73 CKT BLU OPT0 KEY C/45 | 345669753 | C-HSG-C0 | G-CAP-0-P | TPA-C0 | RS | LS | MAL | CPA | MSEAL | RSEAL | - - - - 68 - - - - 63 62 61 - 59 58 57 - 55 - 53<br>- - - - 48 - - - - 43 - - - - 38 37 36 35 34 33<br>- 32 - - 29 - 27 - - - - - - - 19 18 17<br>- - - - - - 11 10 - - - - - - 3 2 1 | SALEABLE | | 345650003 |
| MX123 CONN ASSY 73 CKT BLK OPT0 KEY A/33 | 345669773 | C-HSG-A0 | G-CAP-0-P | TPA-A0 | RS | LS | MAL | CPA | MSEAL | RSEAL | - - - 69 68 - - 65 64 63 62 61 60 - 58 57 56 55 54 -<br>- - - 49 48 - - 45 44 43 42 41 40 - 38 - 36 - 34 -<br>- 32 31 - - - - 25 24 23 22 - 20 19 18 -<br>- 15 14 - - - - 9 - - 6 5 4 - 2 - | SALEABLE | | 345650003 |
| MX123 CONN ASSY 73 CKT GRY OPT0 KEY B/58 | 345669783 | C-HSG-B0 | G-CAP-0-P | TPA-B0 | RS | LS | MAL | CPA | MSEAL | RSEAL | - - - - - - 66 - - - - - - - 58 - - - - -<br>52 51 - - - - - 45 - - - 41 - - 38 37 - - - -<br>- - - - - - - - - - - - - 20 19 18 17<br>- - - - - - - - - - - - - 5 4 - - 1 | SALEABLE | | 345650003 |
| MX123 CONN ASSY 73 CKT GRY OPT9 KEY B/47 | 345669793 | C-HSG-B9 | G-CAP-9-P | TPA-B9 | RS | LS | MAL | CPA | MSEAL | RSEAL | - - 70 - - - 66 - - - 62 - 60 59 - - - - - -<br>- - - - - - 46 45 - - 42 - 40 39 - - - 35 34 33<br>- 32 31 30 - - 27 - - - - - 21 - 19 18 17<br>- 15 - - - 11 - - - - - - - 3 2 1 | SALEABLE | | 345650003 |
| MX123 CONN ASSY 73 CKT BLK OPT0 KEY A/32 | 345669803 | C-HSG-A0 | G-CAP-0-P | TPA-A0 | RS | LS | MAL | CPA | MSEAL | RSEAL | - - - - - 67 66 - - - 62 - 60 - 58 - - 55 54 53<br>- - - - 48 - 46 45 44 43 42 - 40 39 - - - 35 - -<br>- - - - - - 26 25 - - 22 21 - - - 17<br>- 15 14 - - - - - 8 7 6 5 4 3 2 - | SALEABLE | | 345650003 |
| MX123 CONN ASSY 73 CKT BLK OPT9 KEY A/42 | 345669813 | C-HSG-A9 | G-CAP-9-P | TPA-A9 | RS | LS | MAL | CPA | MSEAL | RSEAL | - - - 69 68 - - - - - - - 60 - 58 57 56 - - -<br>- - 50 49 48 - - - - - - - 40 - 38 - - - - -<br>- 32 31 - - 28 27 26 - 24 23 22 21 20 19 - -<br>- 16 15 14 - 12 - 10 9 - - 6 5 - - 2 - | SALEABLE | | 345650003 |
| MX123 CONN ASSY 73 CKT BLK OPT0 KEY A/60 | 345669823 | C-HSG-A0 | G-CAP-0-P | TPA-A0 | RS | LS | MAL | CPA | MSEAL | RSEAL | - - - - - - 66 - - - 62 - - - 58 - - - - -<br>- - - - - - - - - - - 41 - - 38 37 - - - -<br>- - - - - - - - - - - - 20 19 18 17<br>- - - - - - - - - - - - 5 4 - - 1 | SALEABLE | | 345650003 |
| MX123 CONN ASSY 73 CKT GRY OPT9 KEY B/51 | 345669833 | C-HSG-B9 | G-CAP-9-P | TPA-B9 | RS | LS | MAL | CPA | MSEAL | RSEAL | - - - - - - 66 65 - - 62 - 60 59 - - - - - -<br>- - - - - - 46 45 - - 42 - 40 39 - - - 35 34 -<br>- 31 - - - 27 - - - - - - - 19 18 17<br>- 15 - - - 11 - - - - - - - 3 2 1 | SALEABLE | | 345650003 |
| MX123 CONN ASSY 73 CKT BLK OPT9 KEY A/41 | 345669843 | C-HSG-A9 | G-CAP-9-P | TPA-A9 | RS | LS | MAL | CPA | MSEAL | RSEAL | - - - 69 68 - - - - - - - 60 - 58 57 56 - - -<br>- - - 49 48 - - - - - - - - - 38 - - - - -<br>- 32 31 - - 28 27 26 25 24 23 22 21 20 19 - -<br>- 16 15 14 - 12 11 10 9 - - 6 5 4 - 2 - | SALEABLE | | 345650003 |
| MX123 CONN ASSY 73 CKT GRY OPT9 KEY B/62 | 345669853 | C-HSG-B9 | G-CAP-9-P | TPA-B9 | RS | LS | MAL | CPA | MSEAL | RSEAL | - - - - - - 66 - - - - - - - - - - - - -<br>- - - - - - - - - - 41 - - 38 37 - - - -<br>- - - - - - - - - - - - - 19 18 17<br>- - - - - - - - - - - 8 - - 5 4 - - 1 | SALEABLE | | 345650003 |
| MX123 CONN ASSY 73 CKT GRY OPT0 KEY B/61 | 345669863 | C-HSG-B0 | G-CAP-0-P | TPA-B0 | RS | LS | MAL | CPA | MSEAL | RSEAL | - - - - - - 66 - - - - - - - 58 - - - - -<br>- - - - - - - - - - - 41 - - 38 37 - - - -<br>- - - - - - - - - - - - - 20 19 18 17<br>- - - - - - - - - - - - - 5 4 - - 1 | SALEABLE | | 345650003 |
| MX123 CONN ASSY 73 CKT BLK OPT0 KEY A/33 | 345669903 | C-HSG-A0 | G-CAP-0-P | TPA-A0 | RS | LS | MAL | CPA | MSEAL | RSEAL | 72 - 70 - - 67 66 - - - 62 - 60 - - - - 55 54 53<br>- 51 - - 48 - 46 45 44 43 42 - 40 39 - - - 35 - -<br>- - - - - - 26 25 - - 22 21 - - - -<br>- 15 14 - - - - - 8 7 6 5 4 3 2 - | SALEABLE | | 345650003 |

| ASSEMBLY DESCRIPTION | ASSEMBLY PART NUMBER | CONNECTOR HOUSING | GROMMET CAP | TPA | RIGHT SLIDE | LEFT SLIDE | MATE ASSIST LEVER | CPA | MAT SEAL | RING SEAL | BLOCKED TERMINALS<br>CAVITY WITH A NUMBER INDICATES BLOCKED TERMINAL POSITION<br>CAVITY WITHOUT A NUMBER INDICATES OPEN TERMINAL POSITION | STATUS | COMMENTS | INTEGRAL COMPONENTS SOLD SEPARATELY<br>DRESS COVER |
|---|---|---|---|---|---|---|---|---|---|---|---|---|---|---|
| MX123 CONN ASSY 73 CKT BLK OPT0 KEY A/41 | 345669913 | C-HSG-A0 | G-CAP-0-P | TPA-A0 | RS | LS | MAL | CPA | MSEAL | RSEAL | - - 70 69 - - - - - 63 62 61 60 - 58 57 56 55 54 53<br>52 51 - 49 - - - - 44 43 42 41 - - - 37 36 35 34 33<br>- 32 - - 29 28 27 26 - - 23 - - - 19 18 -<br>16 15 - 13 12 11 10 - 8 - - - - 3 - - | SALEABLE | | 345650003 |
| MX123 CONN ASSY 73 CKT BLK OPT0 KEY A/41 | 345669923 | C-HSG-A0 | G-CAP-0-P | TPA-A0 | RS | LS | MAL | CPA | MSEAL | RSEAL | - - 70 69 68 - - 65 64 63 - - - 59 58 - 56 - - 53<br>52 - 50 49 - 47 - - - - 41 40 - 38 37 36 - 34 -<br>- 32 31 30 29 28 27 - - 23 22 21 20 19 18 17<br>16 - - 13 12 11 10 9 - - - - - - - 1 | SALEABLE | | 345650003 |
| MX123 CONN ASSY 73 CKT GRY OPT0 KEY B/51 | 345669933 | C-HSG-B0 | G-CAP-0-P | TPA-B0 | RS | LS | MAL | CPA | MSEAL | RSEAL | 72 71 70 - 68 67 66 - - - 62 61 60 59 58 57 56 55 54 53<br>52 51 50 - 48 47 46 - - - 42 41 40 39 38 37 36 35 34 33<br>- 32 31 30 29 28 27 26 25 24 23 - - - - - -<br>16 15 14 13 - - 10 9 8 7 - - - - - - | SALEABLE | | 345650003 |
| MX123 CONN ASSY 73 CKT BLU OPT0 KEY C/38 | 345669943 | C-HSG-C0 | G-CAP-0-P | TPA-C0 | RS | LS | MAL | CPA | MSEAL | RSEAL | 72 - 70 - 68 67 66 - - 63 62 - - 59 - 57 - - - 53<br>52 51 - - 48 47 46 - 44 - 42 - 40 39 38 - - - 34 33<br>- 32 - 30 - - 27 26 25 - - 22 21 20 - - -<br>- 15 14 - - - 10 9 - - 6 5 4 - - - | SALEABLE | | 345650003 |
| MX123 CONN ASSY 73 CKT BLK OPT0 KEY A/51 | 345669953 | C-HSG-A0 | G-CAP-0-P | TPA-A0 | RS | LS | MAL | CPA | MSEAL | RSEAL | 72 71 70 69 68 - 66 65 64 63 - 61 - 59 58 - 56 - 54 53<br>52 - 50 49 - 47 - - - - 42 41 40 - 38 37 36 - 34 33<br>- 32 31 30 29 28 27 26 - 24 23 22 21 20 19 18 17<br>16 - - 13 12 11 10 9 8 - - - - - - 1 | SALEABLE | | 345650003 |
| MX123 CONN ASSY 73 CKT GRY OPT0 KEY B/24 | 345669963 | C-HSG-B0 | G-CAP-0-P | TPA-B0 | RS | LS | MAL | CPA | MSEAL | RSEAL | 72 71 70 69 - - 66 65 - - 62 61 60 59 - 57 56 - 54 53<br>52 51 50 49 48 47 - - 44 - 42 41 40 39 - 37 36 - 34 33<br>- - 31 - - - - 26 25 24 23 - 21 20 - 18 -<br>16 - 14 - 12 11 - 9 8 7 6 5 4 3 2 - | SALEABLE | | 345650003 |
| MX123 CONN ASSY 73 CKT GRY OPT0 KEY B/19 | 345669973 | C-HSG-B0 | G-CAP-0-P | TPA-B0 | RS | LS | MAL | CPA | MSEAL | RSEAL | 72 71 70 69 - - 66 65 - - 62 61 60 59 - 57 56 55 54 53<br>52 51 50 49 48 47 - - 44 - 42 41 40 39 - 37 36 35 34 33<br>- - 31 - - - - 26 25 24 23 - 21 20 19 18 -<br>16 - 14 - 12 11 - 9 8 7 6 5 4 3 2 1 | SALEABLE | | 345650003 |

# MX123 52/66/73/80-WAY RECEPTACLE ASSY SEALED PIN OUT SHEET

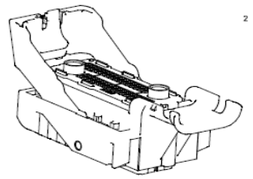


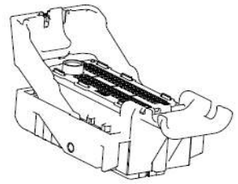


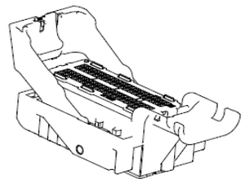


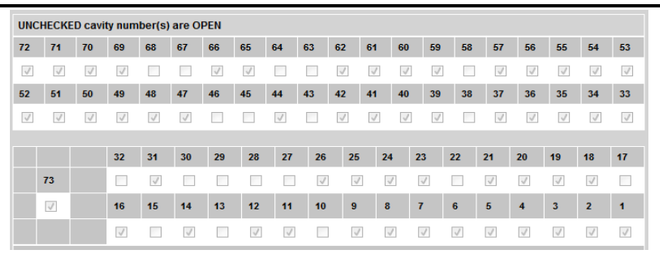


FOR ADDITIONAL INFORMATION SEE SD-34566-001

| STATUS | GM PART # | HRNS CONN ASSY | | | TPA | GROMMET CAP | | | | | | | | | | | | | | | | | | | |
|---|---|---|---|---|---|---|---|---|---|---|---|---|---|---|---|---|---|---|---|---|---|---|---|---|---|
| | | MATERIAL/PART NUMBER | WIRE DRESS OPTION | KEY OPTION ▽Fp | COLOR OPTION ▽Fp | NUMBERS INDICATE CAVITIES OPEN FOR CIRCUITS ▽Fp | | | | | | | | | | | | | | | | | | | |
| SALEABLE | 12672860 | 34566-0103 | 0 | A | BLACK | | | | | | | | | | | | | | | | | | | | |
| SALEABLE | 12672862 | 34566-0203 | 0 | B | ST GRY | 72 | 71 | 70 | 69 | 68 | 67 | 66 | 65 | 64 | 63 | 62 | 61 | 60 | 59 | 58 | 57 | 56 | 55 | 54 | 53 |
| SALEABLE | 12672864 | 34566-0303 | 0 | C | BLUE | 52 | 51 | 50 | 49 | 48 | 47 | 46 | 45 | 44 | 43 | 42 | 41 | 40 | 39 | 38 | 37 | 36 | 35 | 34 | 33 |
| TOOL DES. REL. | 12615660 | 34566-0403 | 0 | D | BROWN | 73 | | | | 32 | 31 | 30 | 29 | 28 | 27 | 26 | 25 | 24 | 23 | 22 | 21 | 20 | 19 | 18 | 17 |
| TOOL DES. REL. | 12615661 | 34566-0503 | 0 | E | GREEN | | | | | 16 | 15 | 14 | 13 | 12 | 11 | 10 | 9 | 8 | 7 | 6 | 5 | 4 | 3 | 2 | 1 |
| SALEABLE | 12672866 | 34566-0603 | 0 | F | NATURAL | | | | | | | | | | | | | | | | | | | | |
| SALEABLE | 12672872 | 34566-0703 | 0 | G | BLUE | | | | | | | | | | | | | | | | | | | | |
| SALEABLE | 12672870 | 34566-0803 | 0 | H | ST GRY | 80 | 79 | 78 | 77 | 76 | 75 | 74 | 73 | 72 | 71 | 70 | 69 | 68 | 67 | 66 | 65 | 64 | 63 | 62 | 61 |
| TOOL DES. REL. | 12672868 | 34566-0903 | 0 | J | BLACK | 60 | 61 | 62 | 63 | 64 | 65 | 66 | 67 | 68 | 69 | 70 | 71 | 72 | 73 | 74 | 75 | 76 | 77 | 78 | 79 |
| TOOL DES. REL. | TBD | 34566-1003 | 0 | K | BROWN | 40 | 39 | 38 | 37 | 36 | 35 | 34 | 33 | 32 | 31 | 30 | 29 | 28 | 27 | 26 | 25 | 24 | 23 | 22 | 21 |
| TOOL DES. REL. | TBD | 34566-1103 | 0 | L | GREEN | 20 | 19 | 18 | 17 | 16 | 15 | 14 | 13 | 12 | 11 | 10 | 9 | 8 | 7 | 6 | 5 | 4 | 3 | 2 | 1 |
| TOOL DES. REL. | TBD | 34566-1203 | 0 | M | NATURAL | | | | | | | | | | | | | | | | | | | | |
| SALEABLE | 12672861 | 34566-1303 | 9 | A | BLACK | | | | | | | | | | | | | | | | | | | | |
| SALEABLE | 12672863 | 34566-1403 | 9 | B | ST GRY | 72 | 71 | 70 | 69 | 68 | 67 | 66 | 65 | 64 | 63 | 62 | 61 | 60 | 59 | 58 | 57 | 56 | 55 | 54 | 53 |
| SALEABLE | 12672865 | 34566-1503 | 9 | C | BLUE | 52 | 51 | 50 | 49 | 48 | 47 | 46 | 45 | 44 | 43 | 42 | 41 | 40 | 39 | 38 | 37 | 36 | 35 | 34 | 33 |
| TOOL DES. REL. | 12615663 | 34566-1603 | 9 | D | BROWN | 73 | | | | 32 | 31 | 30 | 29 | 28 | 27 | 26 | 25 | 24 | 23 | 22 | 21 | 20 | 19 | 18 | 17 |
| TOOL DES. REL. | 12615664 | 34566-1703 | 9 | E | GREEN | | | | | 16 | 15 | 14 | 13 | 12 | 11 | 10 | 9 | 8 | 7 | 6 | 5 | 4 | 3 | 2 | 1 |
| SALEABLE | 12672867 | 34566-1803 | 9 | F | NATURAL | | | | | | | | | | | | | | | | | | | | |
| SALEABLE | 12672873 | 34566-1903 | 9 | G | BLUE | | | | | | | | | | | | | | | | | | | | |
| SALEABLE | 12672871 | 34566-2003 | 9 | H | ST GRY | 80 | 79 | 78 | 77 | 76 | 75 | 74 | 73 | 72 | 71 | 70 | 69 | 68 | 67 | 66 | 65 | 64 | 63 | 62 | 61 |
| TOOL DES. REL. | 12672869 | 34566-2103 | 9 | J | BLACK | 60 | 61 | 62 | 63 | 64 | 65 | 66 | 67 | 68 | 69 | 70 | 71 | 72 | 73 | 74 | 75 | 76 | 77 | 78 | 79 |
| TOOL DES. REL. | TBD | 34566-2203 | 9 | K | BROWN | 40 | 39 | 38 | 37 | 36 | 35 | 34 | 33 | 32 | 31 | 30 | 29 | 28 | 27 | 26 | 25 | 24 | 23 | 22 | 21 |
| TOOL DES. REL. | TBD | 34566-2303 | 9 | L | GREEN | 20 | 19 | 18 | 17 | 16 | 15 | 14 | 13 | 12 | 11 | 10 | 9 | 8 | 7 | 6 | 5 | 4 | 3 | 2 | 1 |
| TOOL DES. REL. | TBD | 34566-2403 | 9 | M | NATURAL | | | | | | | | | | | | | | | | | | | | |
| SALEABLE | 12672856 | 34822-0013 | 0 | A | BLACK | 64 | 63 | 62 | 61 | 60 | 59 | 58 | 57 | 56 | 55 | 54 | 53 | 52 | 51 | 50 | 49 | 66 | | | |
| | | | | | | 48 | 47 | 46 | 45 | 44 | 43 | 42 | 41 | 40 | 39 | 38 | 37 | 36 | 35 | 34 | 33 | | | | |
| SALEABLE | 12672858 | 34822-0033 | 0 | C | BLUE | 65 | | | | 32 | 31 | 30 | 29 | 28 | 27 | 26 | 25 | 24 | 23 | 22 | 21 | 20 | 19 | 18 | 17 |
| | | | | | | | | | | 16 | 15 | 14 | 13 | 12 | 11 | 10 | 9 | 8 | 7 | 6 | 5 | 4 | 3 | 2 | 1 |
| SALEABLE | 12672857 | 34822-0023 | 9 | A | BLACK | 64 | 63 | 62 | 61 | 60 | 59 | 58 | 57 | 56 | 55 | 54 | 53 | 52 | 51 | 50 | 49 | 66 | | | |
| | | | | | | 48 | 47 | 46 | 45 | 44 | 43 | 42 | 41 | 40 | 39 | 38 | 37 | 36 | 35 | 34 | 33 | | | | |
| SALEABLE | 12672859 | 34822-0043 | 9 | C | BLUE | 65 | | | | 32 | 31 | 30 | 29 | 28 | 27 | 26 | 25 | 24 | 23 | 22 | 21 | 20 | 19 | 18 | 17 |
| | | | | | | | | | | 16 | 15 | 14 | 13 | 12 | 11 | 10 | 9 | 8 | 7 | 6 | 5 | 4 | 3 | 2 | 1 |

# MX123 52/66/73/80-WAY RECEPTACLE ASSY SEALED PIN OUT SHEET

| STATUS | GM PART # | HRNS CONN ASSY | | | TPA | GROMMET CAP |
|---|---|---|---|---|---|---|
| | | MATERIAL/PART NUMBER | WIRE DRESS OPTION | KEY OPTION Fp | COLOR OPTION Fp | NUMBERS INDICATE CAVITIES OPEN FOR CIRCUITS Fp |
| TOOL DES. REL. | 12672852 | 160094-0001 | 0 | A | BLACK | |
| TOOL DES. REL. | N/A | 160094-0002 | 0 | B | ST GRY | |
| TOOL DES. REL. | 12672854 | 160094-0003 | 0 | C | BLUE | |
| TOOL DES. REL. | N/A | 160094-0004 | 0 | D | BROWN | |
| TOOL DES. REL. | N/A | 160094-0005 | 0 | E | GREEN | |
| TOOL DES. REL. | N/A | 160094-0006 | 0 | F | NATURAL | |

| | | | | | | | | | | | | | | | | | | | | | | |
|---|---|---|---|---|---|---|---|---|---|---|---|---|---|---|---|---|---|---|---|---|---|---|
| 52 | 14 | 13 | 12 | 11 | 10 | 9 | 8 | 7 | 6 | 5 | 4 | 3 | 2 |
| | 26 | 25 | 24 | 23 | 22 | 21 | 20 | 19 | 18 | 17 | 16 | 15 | |
| 51 | 38 | 37 | 36 | 35 | 34 | 33 | 32 | 31 | 30 | 29 | 28 | 27 | 1 |
| | 50 | 49 | 48 | 47 | 46 | 45 | 44 | 43 | 42 | 41 | 40 | 39 | |

| STATUS | GM PART # | HRNS CONN ASSY | | | TPA | GROMMET CAP |
|---|---|---|---|---|---|---|
| | | MATERIAL/PART NUMBER | WIRE DRESS OPTION | KEY OPTION Fp | COLOR OPTION Fp | NUMBERS INDICATE CAVITIES OPEN FOR CIRCUITS Fp |
| TOOL DES. REL. | 12672853 | 160094-0013 | 9 | A | BLACK | |
| TOOL DES. REL. | N/A | 160094-0014 | 9 | B | ST GRY | |
| TOOL DES. REL. | 12672855 | 160094-0015 | 9 | C | BLUE | |
| TOOL DES. REL. | N/A | 160094-0016 | 9 | D | BROWN | |
| TOOL DES. REL. | N/A | 160094-0017 | 9 | E | GREEN | |
| TOOL DES. REL. | N/A | 160094-0018 | 9 | F | NATURAL | |

| | | | | | | | | | | | | | | | | | | | | | | |
|---|---|---|---|---|---|---|---|---|---|---|---|---|---|---|---|---|---|---|---|---|---|---|
| 52 | 14 | 13 | 12 | 11 | 10 | 9 | 8 | 7 | 6 | 5 | 4 | 3 | 2 |
| | 26 | 25 | 24 | 23 | 22 | 21 | 20 | 19 | 18 | 17 | 16 | 15 | |
| 51 | 38 | 37 | 36 | 35 | 34 | 33 | 32 | 31 | 30 | 29 | 28 | 27 | 1 |
| | 50 | 49 | 48 | 47 | 46 | 45 | 44 | 43 | 42 | 41 | 40 | 39 | |

| STATUS | GM PART # | HRNS CONN ASSY | | | TPA | GROMMET CAP |
|---|---|---|---|---|---|---|
| | | MATERIAL/PART NUMBER | WIRE DRESS OPTION | KEY OPTION Fp | COLOR OPTION Fp | NUMBERS INDICATE CAVITIES OPEN FOR CIRCUITS Fp |
| NA | NA | NA | NA | NA | NA | |

| | | | | | | | | | | | | | | | | | | | | | | |
|---|---|---|---|---|---|---|---|---|---|---|---|---|---|---|---|---|---|---|---|---|---|---|
| 73 | | | | | | | | | | | | | | | | | | | | | | |

| STATUS | GM PART # | HRNS CONN ASSY | | | TPA | GROMMET CAP |
|---|---|---|---|---|---|---|
| | | MATERIAL/PART NUMBER | WIRE DRESS OPTION | KEY OPTION Fp | COLOR OPTION Fp | NUMBERS INDICATE CAVITIES OPEN FOR CIRCUITS Fp |
| SALEABLE | NOT APPLICABLE | 34566-2503 | 0 | A | BLACK | |

| | | | | | | | | | | | | | | | | | | | | | | |
|---|---|---|---|---|---|---|---|---|---|---|---|---|---|---|---|---|---|---|---|---|---|---|
| 72 | 71 | | 69 | 68 | 67 | 66 | | 64 | 63 | 62 | | | 59 | | | 56 | | | 53 |
| | | 50 | | 48 | | 46 | | 44 | 43 | 42 | | | 39 | | | 36 | 35 | | 33 |
| 73 | | | | 32 | | 30 | 29 | | 27 | | | | 23 | | | 20 | | | 17 |
| | | | | | | 14 | 13 | 12 | 11 | | 9 | 8 | | | 5 | 4 | 3 | 2 | 1 |

| STATUS | GM PART # | HRNS CONN ASSY | | | TPA | GROMMET CAP |
|---|---|---|---|---|---|---|
| | | MATERIAL/PART NUMBER | WIRE DRESS OPTION | KEY OPTION Fp | COLOR OPTION Fp | NUMBERS INDICATE CAVITIES OPEN FOR CIRCUITS Fp |
| SALEABLE | NOT APPLICABLE | 34566-2603 | 0 | B | ST GRY | |

| | | | | | | | | | | | | | | | | | | | | | | |
|---|---|---|---|---|---|---|---|---|---|---|---|---|---|---|---|---|---|---|---|---|---|---|
| | | | | | 67 | 66 | 65 | | | | | | 59 | | 57 | | 55 | | 53 |
| | | | 49 | 48 | 47 | | | 44 | | | | | 39 | | 37 | | 35 | | 33 |
| 73 | | | | | | | 29 | 28 | | | | | 23 | | 21 | | | | |
| | | | | | | | | | | | | | 7 | | | | | | |

| STATUS | GM PART # | HRNS CONN ASSY | | | TPA | GROMMET CAP |
|---|---|---|---|---|---|---|
| | | MATERIAL/PART NUMBER | WIRE DRESS OPTION | KEY OPTION Fp | COLOR OPTION Fp | NUMBERS INDICATE CAVITIES OPEN FOR CIRCUITS Fp |
| SALEABLE | NOT APPLICABLE | 34566-2703 | 0 | B | ST GRY | |

| | | | | | | | | | | | | | | | | | | | | | | |
|---|---|---|---|---|---|---|---|---|---|---|---|---|---|---|---|---|---|---|---|---|---|---|
| | | | | | | | 65 | | | | | | 59 | | 57 | | 55 | | 53 |
| | | | 49 | 48 | 47 | | | 44 | | | | | 39 | | 37 | | 35 | | 33 |
| 73 | | | | | | | 29 | 28 | | | | | 23 | | 21 | | | | |
| | | | | | | | | | | | | | 7 | | | | | | |

| STATUS | GM PART # | HRNS CONN ASSY | | | TPA | GROMMET CAP |
|---|---|---|---|---|---|---|
| | | MATERIAL/PART NUMBER | WIRE DRESS OPTION | KEY OPTION Fp | COLOR OPTION Fp | NUMBERS INDICATE CAVITIES OPEN FOR CIRCUITS Fp |
| SALEABLE | TBD | 34566-2803 | 0 | H | ST GRY | |

| | | | | | | | | | | | | | | | | | | | | | | |
|---|---|---|---|---|---|---|---|---|---|---|---|---|---|---|---|---|---|---|---|---|---|---|
| | | | | | | | | | | | | | | | | | | | | | | |
| | | | | | | | | | | | | | | | | | | | | | | |
| | | | | | | | | | | | | | | | | | | | | | | |
| | | | | | | | | | | | | | | | | | | | | | | |

| STATUS | GM PART # | HRNS CONN ASSY | | | TPA | GROMMET CAP |
|---|---|---|---|---|---|---|
| | | MATERIAL/PART NUMBER | WIRE DRESS OPTION | KEY OPTION Fp | COLOR OPTION Fp | NUMBERS INDICATE CAVITIES OPEN FOR CIRCUITS Fp |
| SALEABLE | NOT APPLICABLE | 34566-2903 | 0 | A | BLACK | |

| | | | | | | | | | | | | | | | | | | | | | | |
|---|---|---|---|---|---|---|---|---|---|---|---|---|---|---|---|---|---|---|---|---|---|---|
| 72 | 71 | 70 | 69 | 68 | 67 | 66 | | 64 | 63 | 62 | 61 | | 59 | | | | 55 | 54 | 53 |
| 52 | 51 | | 49 | 48 | | | | 44 | 43 | 42 | 41 | | 39 | | | | 35 | 34 | 33 |
| 73 | | | | 32 | 31 | | 29 | | 27 | | 25 | | 23 | | | | 19 | 18 | 17 |
| | | | | 16 | | | 13 | 12 | 11 | | 9 | 8 | 7 | 6 | 5 | 4 | 3 | 2 | 1 |

| STATUS | GM PART # | HRNS CONN ASSY | | | TPA | GROMMET CAP |
|---|---|---|---|---|---|---|
| | | MATERIAL/PART NUMBER | WIRE DRESS OPTION | KEY OPTION Fp | COLOR OPTION Fp | NUMBERS INDICATE CAVITIES OPEN FOR CIRCUITS Fp |
| SALEABLE | NOT APPLICABLE | 34566-3003 | 0 | A | BLACK | |

| | | | | | | | | | | | | | | | | | | | | | | |
|---|---|---|---|---|---|---|---|---|---|---|---|---|---|---|---|---|---|---|---|---|---|---|
| 72 | 71 | 70 | 69 | 68 | 67 | 66 | | 64 | 63 | 62 | | 60 | 59 | 58 | 57 | 56 | 55 | 54 | 53 |
| 52 | 51 | 50 | 49 | 48 | 47 | 46 | | 44 | 43 | 42 | 41 | 40 | 39 | 38 | 37 | 36 | 35 | 34 | 33 |
| 73 | | | | 32 | 31 | 30 | 29 | 28 | 27 | | 25 | 24 | 23 | 22 | 21 | 20 | 19 | 18 | 17 |
| | | | | 16 | 15 | 14 | 13 | 12 | 11 | | 9 | 8 | 7 | 6 | 5 | 4 | 3 | 2 | 1 |

| STATUS | GM PART # | HRNS CONN ASSY | | | TPA | GROMMET CAP |
|---|---|---|---|---|---|---|
| | | MATERIAL/PART NUMBER | WIRE DRESS OPTION | KEY OPTION Fp | COLOR OPTION Fp | NUMBERS INDICATE CAVITIES OPEN FOR CIRCUITS Fp |
| SALEABLE | NOT APPLICABLE | 34566-3103 | 0 | B | ST GRY | |

| | | | | | | | | | | | | | | | | | | | | | | |
|---|---|---|---|---|---|---|---|---|---|---|---|---|---|---|---|---|---|---|---|---|---|---|
| | | | | | | | 65 | | | 62 | | | 59 | | 57 | | 55 | | 53 |
| | | | 49 | 48 | | 46 | | | | 42 | | | 39 | | 37 | | 35 | | 33 |
| 73 | | | | | | | 29 | | | 26 | | | 23 | | 21 | | | 18 | |
| | | | | | 15 | | | | | | 9 | 8 | 7 | | | 4 | 3 | | |

| STATUS | GM PART # | HRNS CONN ASSY | | | TPA | GROMMET CAP |
|---|---|---|---|---|---|---|
| | | MATERIAL/PART NUMBER | WIRE DRESS OPTION | KEY OPTION Fp | COLOR OPTION Fp | NUMBERS INDICATE CAVITIES OPEN FOR CIRCUITS Fp |
| SALEABLE | NOT APPLICABLE | 34566-3203 | 0 | B | ST GRY | |

| | | | | | | | | | | | | | | | | | | | | | | |
|---|---|---|---|---|---|---|---|---|---|---|---|---|---|---|---|---|---|---|---|---|---|---|
| | | | | | 67 | | | | | | | | 60 | 59 | 58 | 57 | 56 | 55 | | 53 |
| | | 50 | 49 | 48 | | 46 | | | | | | | | 39 | 38 | 37 | | 35 | 34 | 33 |
| 73 | | | | | | | 29 | | | | | | | 23 | 22 | 21 | | | 18 | |
| | | | | 16 | 15 | 14 | | | | | | | | 7 | 6 | 5 | 4 | 3 | | |

| STATUS | GM PART # | HRNS CONN ASSY | | | TPA | GROMMET CAP |
|---|---|---|---|---|---|---|
| | | MATERIAL/PART NUMBER | WIRE DRESS OPTION | KEY OPTION Fp | COLOR OPTION Fp | NUMBERS INDICATE CAVITIES OPEN FOR CIRCUITS Fp |
| SALEABLE | NOT APPLICABLE | 34566-3303 | 0 | B | ST GRY | |

| | | | | | | | | | | | | | | | | | | | | | | |
|---|---|---|---|---|---|---|---|---|---|---|---|---|---|---|---|---|---|---|---|---|---|---|
| | | | | | | | | | | | | | 59 | 58 | 57 | 56 | 55 | | 53 |
| | | 50 | 49 | 48 | | 46 | | | | | | | 39 | 38 | 37 | | 35 | 34 | 33 |
| 73 | | | | | | | 29 | | | | | | 23 | 22 | 21 | | | 18 | |
| | | | | 16 | 15 | 14 | | | | | | | 7 | 6 | 5 | 4 | 3 | | |

| STATUS | GM PART # | HRNS CONN ASSY | | | TPA | GROMMET CAP |
|---|---|---|---|---|---|---|
| | | MATERIAL/PART NUMBER | WIRE DRESS OPTION | KEY OPTION Fp | COLOR OPTION Fp | NUMBERS INDICATE CAVITIES OPEN FOR CIRCUITS Fp |
| SALEABLE | NOT APPLICABLE | 34566-3403 | SEE 34566-3003 | | | |

| STATUS | GM PART # | HRNS CONN ASSY | | | TPA | GROMMET CAP |
|---|---|---|---|---|---|---|
| | | MATERIAL/PART NUMBER | WIRE DRESS OPTION | KEY OPTION Fp | COLOR OPTION Fp | NUMBERS INDICATE CAVITIES OPEN FOR CIRCUITS Fp |
| SALEABLE | NOT APPLICABLE | 34566-3503 | 0 | A | BLACK | |

| | | | | | | | | | | | | | | | | | | | | | | |
|---|---|---|---|---|---|---|---|---|---|---|---|---|---|---|---|---|---|---|---|---|---|---|
| 72 | 71 | | 69 | 68 | 67 | 66 | | 64 | 63 | 62 | | 60 | 59 | | | | | | | | | |
| 52 | | | 49 | 48 | | 46 | | 44 | 43 | 42 | | 40 | 39 | | | | 35 | | 33 |
| 73 | | | | 32 | | | 29 | | 27 | | | 24 | 23 | | | | | | 17 |
| | | | | | | 14 | 13 | 12 | 11 | | 9 | 8 | 7 | 6 | 5 | 4 | 3 | 2 | 1 |

molex

# MX123 52/66/73/80-WAY RECEPTACLE ASSY SEALED PIN OUT SHEET

| STATUS | GM PART # | HRNS CONN ASSY | | | TPA | GROMMET CAP |
|---|---|---|---|---|---|---|
| | | MATERIAL/PART NUMBER | WIRE DRESS OPTION | KEY OPTION Fp | COLOR OPTION Fp | NUMBERS INDICATE CAVITIES OPEN FOR CIRCUITS Fp |
| SALEABLE | NOT APPLICABLE | 34566-3603 | 0 | B | ST GRY | 73: 68 64 59 57 55 53 / 49 48 46 39 37 35 33 / 32 29 23 21 18 / 11 10 7 |
| SALEABLE | NOT APPLICABLE | 34566-3703 | 0 | A | BLACK | 73: 68 67 66 65 59 55 53 / 49 48 47 44 39 35 33 / 29 28 23 / 7 |
| SALEABLE | NOT APPLICABLE | 34566-3803 | 0 | A | BLACK | 73: 72 71 69 68 67 66 64 63 62 59 56 53 / 50 48 46 44 43 42 39 36 35 33 / 32 30 29 27 23 20 17 / 14 13 12 11 10 9 8 5 4 3 2 1 |
| SALEABLE | NOT APPLICABLE | 34566-3903 | 0 | B | ST GRY | 73: 65 59 57 55 53 / 49 48 46 44 39 37 35 33 / 29 28 24 23 21 / 7 |
| SALEABLE | NOT APPLICABLE | 34566-4003 | 0 | B | ST GRY | 73: 67 66 64 63 59 57 55 53 / 50 49 48 43 39 37 35 33 / 32 29 27 24 23 21 18 / 15 7 6 5 4 3 |
| SALEABLE | NOT APPLICABLE | 34566-4103 | 0 | A | BLACK | 73: 72 71 69 68 67 66 64 63 62 60 59 / 52 49 48 46 45 44 43 42 40 39 35 33 / 32 29 27 26 24 23 17 / 14 13 12 11 10 9 8 7 6 5 4 3 2 1 |
| SALEABLE | NOT APPLICABLE | 34566-4203 | 0 | B | ST GRY | 73: 64 59 57 55 53 / 50 49 48 46 39 37 35 33 / 32 29 24 23 21 18 / 15 7 6 5 4 3 |
| SALEABLE | NOT APPLICABLE | 34566-4303 | 0 | A | BLACK | 73: 70 69 68 67 65 64 63 61 59 58 57 56 / 50 49 48 47 41 38 37 36 34 33 / 32 31 30 29 28 27 24 23 20 19 18 / 16 13 12 11 10 9 1 |
| SALEABLE | NOT APPLICABLE | 34566-4403 | 0 | A | BLACK | 73: 72 71 70 69 68 67 66 65 64 63 61 59 58 57 56 / 50 49 48 47 41 38 37 36 34 33 / 32 31 30 29 28 27 24 23 20 19 18 / 16 13 12 11 10 9 6 4 |
| SALEABLE | NOT APPLICABLE | 34566-4503 | 0 | H | ST GRY | 79 78 77 76 75 74 73 72 71 70 69 68 66 65 64 63 61 / 60 59 58 57 56 53 50 44 43 41 / 40 39 38 37 35 34 33 32 30 29 27 26 24 23 22 21 / 20 19 18 17 13 12 11 8 6 5 3 2 |
| SALEABLE | NOT APPLICABLE | 34566-4603 | 0 | H | ST GRY | 79 78 77 76 75 74 73 72 71 70 69 68 66 65 64 63 61 / 60 59 58 57 56 53 50 44 43 41 / 40 39 38 37 35 34 33 32 30 29 27 26 22 21 / 20 19 18 17 13 12 8 6 5 3 2 |
| SALEABLE | NOT APPLICABLE | 34566-4703 | 0 | B | ST GRY | 73: 67 66 65 64 59 58 57 55 53 / 49 48 47 44 39 38 37 35 33 / 29 23 22 21 / 12 9 7 |
| SALEABLE | NOT APPLICABLE | 34566-4803 | 0 | A | BLACK | 73: 72 71 69 68 67 66 64 63 62 61 59 53 / 48 44 42 41 39 35 33 / 32 29 27 25 23 17 / 13 12 11 9 8 5 4 3 2 1 |
| SALEABLE | NOT APPLICABLE | 34566-4903 | 0 | A | BLACK | 73: 72 71 70 69 68 66 65 64 63 62 61 59 58 57 56 55 / 52 51 50 49 47 44 43 41 38 37 36 35 34 33 / 32 31 30 29 28 27 24 23 20 19 18 17 / 16 15 14 13 12 11 10 9 2 1 |
| SALEABLE | NOT APPLICABLE | 34566-5003 | 0 | H | ST GRY | 79 78 77 76 75 74 73 72 71 70 69 68 66 65 64 63 61 / 60 59 58 57 56 53 52 50 44 43 41 / 40 39 38 37 35 34 33 32 30 29 27 26 22 21 / 20 19 18 17 16 14 13 12 11 10 9 8 6 5 3 2 |

# MX123 52/66/73/80-WAY RECEPTACLE ASSY SEALED PIN OUT SHEET

| STATUS | GM PART # | HRNS CONN ASSY | | | TPA | GROMMET CAP |
|---|---|---|---|---|---|---|
| | | MATERIAL/PART NUMBER | WIRE DRESS OPTION | KEY OPTION Fp | COLOR OPTION Fp | NUMBERS INDICATE CAVITIES OPEN FOR CIRCUITS Fp |
| SALEABLE | NOT APPLICABLE | 34566-5103 | 0 | B | ST GRY | 73 |
| SALEABLE | NOT APPLICABLE | 34566-5203 | 0 | A | BLACK | 73 |
| SALEABLE | NOT APPLICABLE | 34566-5303 | 0 | B | ST GRY | 73 |
| SALEABLE | NOT APPLICABLE | 34566-5403 | 0 | B | ST GRY | 73 |
| SALEABLE | NOT APPLICABLE | 34566-5503 | 0 | A | BLACK | 73 |
| SALEABLE | NOT APPLICABLE | 34566-5603 | SEE 34566-2503 | | | |
| SALEABLE | NOT APPLICABLE | 34566-5703 | 0 | B | ST GRY | 73 |
| SALEABLE | NOT APPLICABLE | 34566-5803 | 0 | B | ST GRY | 73 |
| SALEABLE | NOT APPLICABLE | 34566-5903 | 0 | A | BLACK | 73 |
| SALEABLE | NOT APPLICABLE | 34566-6003 | 0 | B | ST GRY | 73 |
| SALEABLE | NOT APPLICABLE | 34566-6103 | 0 | B | ST GRY | 73 |
| SALEABLE | NOT APPLICABLE | 34566-6203 | 0 | A | BLACK | 73 |
| SALEABLE | NOT APPLICABLE | 34566-6303 | 0 | A | BLACK | 73 |
| SALEABLE | NOT APPLICABLE | 34566-6403 | 0 | A | BLACK | 73 |
| SALEABLE | NOT APPLICABLE | 34566-6503 | 0 | A | BLACK | 73 |

# MX123 52/66/73/80-WAY RECEPTACLE ASSY SEALED PIN OUT SHEET

| STATUS | GM PART # | HRNS CONN ASSY | | | TPA | GROMMET CAP |
|---|---|---|---|---|---|---|
| | | MATERIAL/PART NUMBER | WIRE DRESS OPTION | KEY OPTION Fp | COLOR OPTION Fp | NUMBERS INDICATE CAVITIES OPEN FOR CIRCUITS Fp |
| SALEABLE | NOT APPLICABLE | 34566-6603 | 0 | H | ST GRY | 79 78 77 76 75 74 73 72 71 70 69 68 66 65 64 63 61<br>60 59 58 57 56 53 52 50 44 43 41<br>40 39 38 37 35 34 33 32 30 29 27 26 22 21<br>20 19 18 17 16 13 12 8 6 5 3 2 |
| SALEABLE | NOT APPLICABLE | 34566-6703 | 0 | H | ST GRY | 79 78 77 76 75 74 73 72 71 70 69 68 66 65 64 63 61<br>60 59 58 57 56 53 50 44 43 41<br>40 39 38 37 35 34 33 32 30 29 27 26 22 21<br>20 19 18 17 14 13 12 11 10 9 8 6 5 3 2 |
| SALEABLE | NOT APPLICABLE | 34566-6803 | 0 | B | ST GRY | 65 59 57 55 53<br>49 48 46 44 39 37 35 33<br>73 29 28 23 21<br>7 |
| SALEABLE | NOT APPLICABLE | 34566-6903 | 0 | B | ST GRY | 64 59 57 55 53<br>49 48 46 39 37 35 33<br>73 32 29 23 21 18<br>7 |
| SALEABLE | NOT APPLICABLE | 34566-7003 | 0 | B | ST GRY | 67 66 59 57 56 55 53<br>50 49 48 47 39 37 36 35 33<br>73 29 23 21 18 17<br>15 13 12 8 7 6 5 4 3 |
| SALEABLE | NOT APPLICABLE | 34566-7103 | 0 | A | BLACK | 72 71 70 69 68 67 66 64 63 62 60 59 55 54 53<br>52 49 48 44 43 42 40 39 35 34 33<br>73 32 29 28 27 24 23 19 18 17<br>16 13 12 11 9 8 7 6 5 4 3 2 1 |
| SALEABLE | NOT APPLICABLE | 34566-7203 | 0 | B | ST GRY | 72 71 70 69 68 67 66 65 64 63 62 60 59 55 54 53<br>52 49 48 44 43 42 39 35 34 33<br>73 32 29 27 24 23 20 19 18 17<br>16 13 12 11 9 8 7 6 5 4 3 2 1 |
| SALEABLE | NOT APPLICABLE | 34566-7303 | 0 | B | ST GRY | 69 68 66 59 55 53<br>49 48 46 44 39 37 35 33<br>73 29 28 23 21 18 17<br>12 11 10 7 |
| SALEABLE | NOT APPLICABLE | 34566-7403 | 0 | B | ST GRY | 59 57 55 53<br>50 49 48 46 39 37 35 33<br>73 29 23 21<br>15 7 6 5 4 3 |
| SALEABLE | NOT APPLICABLE | 34566-7503 | 0 | A | BLACK | 72 71 70 69 68 67 66 64 63 62 60 59 58 57 56 55 54 53<br>52 51 50 49 48 47 46 44 43 42 40 39 38 37 36 35 34 33<br>73 32 31 30 29 28 27 24 23 22 21 20 19 18 17<br>16 15 14 13 12 11 9 8 7 6 5 4 3 2 1 |
| SALEABLE | NOT APPLICABLE | 34566-7603 | 0 | B | ST GRY | 69 68 66 59 55 53<br>49 48 46 44 39 37 35 33<br>73 29 28 23 21 18 17<br>12 11 10 7 |
| SALEABLE | NOT APPLICABLE | 34566-7703 | 0 | A | BLACK | 72 71 70 69 68 67 66 64 63 62 60 59 55 54 53<br>52 49 48 44 43 42 40 39 35 34 33<br>73 32 29 27 24 23 19 18 17<br>16 13 12 11 9 8 7 6 5 4 3 2 1 |
| SALEABLE | NOT APPLICABLE | 34566-7803 | 0 | A | BLACK | 72 71 70 68 66 64 63 62 61 60 59 55 54 53<br>52 49 48 46 44 43 42 40 39 35 34 33<br>73 32 29 28 27 24 23 19 18 17<br>16 14 13 12 11 9 8 7 6 3 2 1 |
| SALEABLE | NOT APPLICABLE | 34566-7903 | 0 | B | ST GRY | 64 59 57 55 53<br>42 39 35 33<br>73 23 20 19<br>15 4 3 2 1 |
| SALEABLE | NOT APPLICABLE | 34566-8003 | 0 | A | BLACK | 69 68 65 64 63 61 60 59 58 56 55 53<br>52 50 49 48 47 41 38 37 36 34 33<br>73 32 31 30 29 28 27 24 23 20 19 18 17<br>16 13 12 11 10 9 1 |

molex

# MX123 52/66/73/80-WAY RECEPTACLE ASSY SEALED PIN OUT SHEET

| STATUS | GM PART # | HRNS CONN ASSY | | | TPA | GROMMET CAP |
|---|---|---|---|---|---|---|
| | | MATERIAL/PART NUMBER | WIRE DRESS OPTION | KEY OPTION Fp | COLOR OPTION Fp | NUMBERS INDICATE CAVITIES OPEN FOR CIRCUITS Fp |
| SALEABLE | NOT APPLICABLE | 34566-8103 | 0 | H | ST GRY | 78 72 66 63 61<br>60 59 58 57 56 53 52 50 44 43 41<br>40 37 35 34 33 32 30 29 27 26 24 22 21<br>20 19 18 17 16 13 12 8 6 5 3 2 |
| SALEABLE | NOT APPLICABLE | 34566-8203 | 0 | A | BLACK | 70 67 66 58 56 55 54<br>47 44 43 42 41 39 37 36 34<br>73 31 30 27 25 24 21 20 19 18<br>13 6 5 4 3 1 |
| SALEABLE | NOT APPLICABLE | 34566-8303 | 0 | A | BLACK | 72 71 69 68 67 66 64 63 62 59 58 57 56 54 53<br>52 51 50 49 48 47 46 44 43 42 39 38 37 36 35 34 33<br>73 32 31 30 29 27 24 23 22 21 20 19 17<br>15 14 13 12 11 9 8 7 6 5 4 3 2 1 |
| SALEABLE | NOT APPLICABLE | 34566-8403 | 0 | B | ST GRY | 65 64 59 57 55 53<br>50 49 48 46 39 37 35 33<br>73 32 29 24 23 21<br>15 7 6 5 4 3 |
| SALEABLE | NOT APPLICABLE | 34566-8503 | 0 | B | ST GRY | 72 71 70 69 68 67 66 65 64 63 62 60 59 55 54 53<br>52 49 48 44 43 42 39 35 34 33<br>73 32 29 27 24 23 19 18 17<br>13 12 11 9 8 7 6 5 4 3 2 1 |
| SALEABLE | NOT APPLICABLE | 34566-8603 | 0 | A | BLACK | 69 68 66 59 57 55 53<br>49 48 46 44 39 38 37 35 33<br>73 29 28 23 21 18 17<br>12 11 10 7 |
| SALEABLE | NOT APPLICABLE | 34566-8703 | 0 | B | ST GRY | 69 68 66 64 59 57 55 53<br>50 49 48 47 44 39 37 35 33<br>73 29 28 23 21 17<br>15 12 11 10 7 6 5 4 3 |
| SALEABLE | NOT APPLICABLE | 34566-8803 | 0 | B | ST GRY | 68 67 66 65 59 58 57 54 53<br>51 50 49 48 46 45 43 42 40 39 38 37 33<br>73 32 31 30 26 24 23 22 20<br>16 13 10 9 8 7 6 5 4 |
| SALEABLE | NOT APPLICABLE | 34566-8903 | 0 | H | ST GRY | 78 71 70 69 68 67 66 65 64 63 61<br>58 57 56 53 52 51 50 44 43 41<br>40 37 35 34 33 32 30 29 27 26 22 21<br>20 19 18 17 16 14 12 10 9 8 7 6 5 3 2 1 |
| SALEABLE | NOT APPLICABLE | 34566-9003 | 0 | B | ST GRY | 69 68 66 59 57 55 53<br>49 48 46 44 39 37 35 33<br>73 29 28 23 21 18<br>11 10 7 |
| SALEABLE | NOT APPLICABLE | 34566-9103 | 0 | A | BLACK | 68 65 63 61 59 58 56 53<br>52 51 50 47 41 38 37 36 35 34 33<br>73 32 31 30 29 28 27 25 24 23 22 21 20 19 18 17<br>16 15 14 13 12 11 10 9 1 |
| SALEABLE | NOT APPLICABLE | 34566-9203 | 0 | A | BLACK | 72 71 70 69 68 67 66 64 63 62 60 59 55 54 53<br>52 49 48 44 43 42 40 39 38 35 34 33<br>73 30 29 28 27 24 23 19 18 17<br>16 13 12 11 9 8 7 6 5 4 3 2 1 |
| SALEABLE | NOT APPLICABLE | 34566-9303 | 0 | A | BLACK | 72 71 69 68 67 66 64 63 62 59 58 57 56 55 54 53<br>52 51 50 49 48 47 46 44 43 42 39 38 37 36 35 34 33<br>73 32 31 30 29 27 24 23 22 21 20 19 17<br>15 14 13 12 11 9 8 7 6 5 4 3 2 1 |
| SALEABLE | NOT APPLICABLE | 34566-9403 | 0 | B | ST GRY | 68 67 66 65 59 58 57 54 53<br>51 50 49 48 46 45 43 42 41 40 39 38 37 35 33<br>73 32 31 30 26 24 23 22 20<br>16 13 10 9 8 7 6 5 4 |
| SALEABLE | NOT APPLICABLE | 34566-9503 | 0 | A | BLACK | 72 71 70 69 68 65 64 63 61 59 58 57 56<br>52 51 49 47 41 38 37 36 34 33<br>73 32 31 30 29 28 27 24 23 20 19 18 17<br>16 15 14 13 12 11 10 9 1 |

molex

# MX123 52/66/73/80-WAY RECEPTACLE ASSY SEALED PIN OUT SHEET

| STATUS | GM PART # | HRNS CONN ASSY | | | TPA | GROMMET CAP |
|---|---|---|---|---|---|---|
| | | MATERIAL/PART NUMBER | WIRE DRESS OPTION | KEY OPTION Fp | COLOR OPTION Fp | NUMBERS INDICATE CAVITIES OPEN FOR CIRCUITS Fp |
| SALEABLE | NOT APPLICABLE | 34566-9603 | 0 | A | BLACK | 71 70 69 68 66 65 64 63 61 59 58 57 56<br>52 50 49 47 41 38 37 36 35 34 33<br>73 32 31 30 29 28 27 24 23 20 19 18 17<br>16 15 14 13 12 11 10 9 1 |
| SALEABLE | NOT APPLICABLE | 34566-9703 | 0 | A | BLACK | 72 71 70 69 68 65 64 63 61 59 57 56<br>52 51 50 49 47 41 38 37 36 34 33<br>73 32 31 30 29 28 27 24 23 20 19 18<br>16 13 12 11 10 9 3 2 1 |
| SALEABLE | NOT APPLICABLE | 34566-9803 | 0 | A | BLACK | 72 71 70 69 68 65 64 63 61 59 57 56<br>52 51 50 49 47 41 38 37 36 34 33<br>73 32 31 30 29 28 27 24 23 20 19 18<br>16 13 12 11 10 9 1 |
| SALEABLE | NOT APPLICABLE | 34566-9903 | 0 | A | BLACK | 71 69 68 65 64 63 61 59 58 57 56<br>52 50 49 47 41 38 37 36 34 33<br>73 32 31 30 29 28 27 24 23 20 19 18 17<br>16 13 12 11 10 9 1 |
| SALEABLE | NOT APPLICABLE | 34566-1013 | 0 | A | BLACK | 71 69 68 65 64 63 61 59 58 57 56<br>52 50 49 47 41 38 37 36 34 33<br>73 32 31 30 29 28 27 24 23 20 19 18 17<br>16 13 12 11 10 9 3 2 1 |
| SALEABLE | NOT APPLICABLE | 34566-1023 | 0 | A | BLACK | 70 67 66 65 58 57 55 54<br>50 49 47 44 43 42 41 39 37 35<br>73 32 30 27 25 24 21 20 19 18 17<br>16 15 13 10 9 8 6 5 3 2 1 |
| SALEABLE | NOT APPLICABLE | 34566-1033 | 0 | A | BLACK | 72 70 67 66 65 58 57 55 54<br>50 49 47 44 43 42 41 39 37 35<br>73 32 30 27 26 25 24 21 20 19 18 17<br>16 15 13 10 9 8 6 5 3 2 1 |
| SALEABLE | NOT APPLICABLE | 34566-1043 | 0 | B | ST GRY | 71 70 68 66 65 59 58 57 54 53<br>51 50 49 48 46 45 43 41 40 39 38 37 36 35 33<br>73 32 31 30 24 23 22 20<br>16 13 12 11 10 9 8 7 6 5 4 |
| SALEABLE | NOT APPLICABLE | 34566-1053 | 0 | H | ST GRY | 79 78 77 76 75 74 73 72 71 70 69 68 66 65 64 63 61<br>60 59 58 57 56 53 52 50 44 43 41<br>40 39 38 37 35 34 33 32 30 29 27 26 22 21<br>20 19 18 17 16 14 13 12 11 9 8 6 5 3 2 |
| SALEABLE | NOT APPLICABLE | 34566-1063 | 0 | B | ST GRY | 65 60 59 57 56 55 53<br>49 48 47 44 40 39 37 36 35 33<br>73 29 28 24 23 21<br>2 |
| SALEABLE | NOT APPLICABLE | 34566-1073 | 0 | A | BLACK | 72 71 70 69 68 67 66 65 64 63 61 59 58 57 56 54<br>50 49 48 47 42 41 38 37 36 34 33<br>73 32 31 30 29 28 27 26 24 23 20 19 18<br>16 13 12 11 10 9 |
| SALEABLE | NOT APPLICABLE | 34566-1083 | 0 | B | ST GRY | 68 67 66 65 64 59 58 57 55 54 53<br>51 50 49 48 46 45 43 42 41 40 39 38 37 35 33<br>73 32 31 30 26 24 23 22 20<br>16 13 10 9 8 7 6 5 4 3 2 |
| SALEABLE | NOT APPLICABLE | 34566-1093 | 0 | A | BLACK | 70 68 67 66 58 56 55 54<br>49 47 44 43 42 41 39 37 36 34<br>73 31 30 27 25 24 21 20 19 18<br>13 6 5 4 3 1 |
| SALEABLE | NOT APPLICABLE | 34566-1123 | 0 | H | ST GRY | 78 71 70 69 68 67 66 65 64 63 61<br>58 57 56 53 52 51 50 44 43 41<br>40 37 35 34 33 32 30 29 27 26 22 21<br>20 19 18 17 16 14 12 10 9 8 7 6 5 3 2 1 |
| SALEABLE | NOT APPLICABLE | 34566-1133 | 0 | A | BLACK | 70 68 67 66 61 58 57 55 54<br>49 47 45 44 43 42 41 39 37 34<br>73 32 30 27 25 24 21 20 19 18<br>13 11 6 5 3 1 |

# MX123 52/66/73/80-WAY RECEPTACLE ASSY SEALED PIN OUT SHEET

| STATUS | GM PART # | HRNS CONN ASSY | | | TPA | GROMMET CAP |
|---|---|---|---|---|---|---|
| | | MATERIAL/PART NUMBER | WIRE DRESS OPTION | KEY OPTION Fp | COLOR OPTION Fp | NUMBERS INDICATE CAVITIES OPEN FOR CIRCUITS Fp |
| SALEABLE | NOT APPLICABLE | 34566-1143 | 0 | A | BLACK | 73: 68 65 63 61 59 58 56 53 / 52 50 47 41 38 37 36 35 34 33 / 32 31 30 29 28 27 25 24 23 22 21 20 19 18 17 / 16 15 14 13 12 11 10 9 1 |
| SALEABLE | NOT APPLICABLE | 34566-1153 | 0 | A | BLACK | 73: 70 67 66 65 58 57 55 / 49 47 44 43 42 41 39 37 / 32 30 27 25 24 23 21 20 19 18 / 13 8 6 5 3 1 |
| SALEABLE | NOT APPLICABLE | 34566-1163 | 0 | H | ST GRY | 73: 78 72 71 70 69 68 66 65 64 63 61 / 60 59 58 57 56 53 52 50 44 43 41 / 40 37 35 34 32 30 29 27 26 22 21 / 20 19 18 17 16 13 12 8 6 5 3 2 |
| SALEABLE | NOT APPLICABLE | 34566-1173 | 0 | A | BLACK | 73: 72 71 69 68 65 64 63 62 61 60 59 58 56 54 / 52 50 49 48 47 45 42 41 38 37 36 34 33 / 32 31 30 29 28 27 26 24 23 20 19 18 17 / 16 13 12 11 10 9 |
| SALEABLE | NOT APPLICABLE | 34566-1183 | 0 | B | ST GRY | 73: 66 65 64 62 59 57 55 53 / 49 48 47 44 42 39 37 35 33 / 29 28 23 21 17 / 12 9 7 |
| SALEABLE | NOT APPLICABLE | 34566-1193 | 0 | A | BLACK | 73: 72 71 69 68 67 66 64 63 62 60 59 54 53 / 52 49 48 46 44 43 42 39 34 33 / 32 29 27 23 17 / 14 13 12 11 9 8 7 6 5 4 3 2 1 |
| SALEABLE | NOT APPLICABLE | 34566-1213 | 0 | A | BLACK | 73: 72 71 69 68 67 66 64 63 62 59 54 53 / 52 48 46 44 43 42 39 33 / 32 29 27 24 23 17 / 14 13 12 11 9 8 5 4 3 2 1 |
| SALEABLE | NOT APPLICABLE | 34566-1223 | 0 | B | ST GRY | 73: 67 66 65 63 62 59 57 55 53 / 48 43 42 39 37 35 33 / 29 27 26 23 21 17 / 12 9 7 |
| SALEABLE | NOT APPLICABLE | 34566-1233 | 0 | B | ST GRY | 73: 65 62 59 57 55 53 / 48 46 42 39 37 35 33 / 29 26 23 21 17 / 12 9 7 |
| SALEABLE | NOT APPLICABLE | 34566-1243 | 0 | B | ST GRY | 73: 50 59 57 55 53 / 48 46 39 37 35 33 / 29 23 21 17 / 15 12 7 6 5 4 3 |
| SALEABLE | NOT APPLICABLE | 34566-1253 | 9 | B | ST GRY | 73: 65 60 59 57 55 53 / 49 48 46 40 39 37 35 33 / 24 23 21 / 2 |
| SALEABLE | NOT APPLICABLE | 34566-1263 | 9 | A | BLACK | NUMBERS IN BOLD MUST USE SAE WIRE MEETING SAE J1128, WIRE SIZE (NO.20) OR (NO.18 MAX. O.D. OF 2.06 MM) PER G.M. DRAWING NUMBER 12582682. / 73: 72 71 69 68 67 66 64 63 62 59 56 53 / 50 48 46 44 43 42 39 36 35 33 / 32 30 29 27 24 23 20 17 / 14 13 12 11 9 8 5 4 3 2 1 |
| SALEABLE | NOT APPLICABLE | 34566-1273 | 0 | A | BLACK | 73: 70 69 68 65 64 63 61 59 58 57 56 / 52 50 49 48 47 41 38 37 36 34 33 / 32 31 30 29 28 27 24 23 20 19 18 / 16 13 12 11 10 9 1 |
| SALEABLE | NOT APPLICABLE | 34566-1283 | 0 | A | BLACK | 73: 72 71 70 69 68 66 65 64 63 61 59 58 57 56 54 / 52 50 49 48 47 42 41 38 37 36 34 33 / 32 31 30 29 28 27 26 24 23 20 19 18 / 16 13 12 11 10 9 |

# MX123 52/66/73/80-WAY RECEPTACLE ASSY SEALED PIN OUT SHEET

| STATUS | GM PART # | HRNS CONN ASSY | | | TPA | GROMMET CAP |
|---|---|---|---|---|---|---|
| | | MATERIAL/PART NUMBER | WIRE DRESS OPTION | KEY OPTION Fp | COLOR OPTION Fp | NUMBERS INDICATE CAVITIES OPEN FOR CIRCUITS Fp |
| SALEABLE | NOT APPLICABLE | 34566-1293 | 0 | A | BLACK | 73 |
| SALEABLE | NOT APPLICABLE | 34566-1313 | 0 | H | ST GRY | 80 78 72 71 70 69 68 66 65 64 63 61<br>58 57 56 55 54 53 46 44 43 42<br>40 37 35 32 30 29 27 26 21<br>20 19 18 17 15 12 8 6 5 3 2 |
| SALEABLE | NOT APPLICABLE | 34566-1323 | 0 | A | BLACK | 73 |
| SALEABLE | NOT APPLICABLE | 34566-1333 | 0 | A | BLACK | 73 |
| SALEABLE | NOT APPLICABLE | 34566-1343 | 0 | A | BLACK | 73 |
| SALEABLE | NOT APPLICABLE | 34566-1353 | 0 | H | ST GRY | 79 78 77 76 75 74 73 72 71 70 69 68 66 65 64 63 61<br>60 59 58 57 56 53 50 44 43 41<br>40 39 38 37 35 34 32 30 29 27 26 22 21<br>20 19 18 17 13 12 11 8 6 5 3 2 |
| SALEABLE | NOT APPLICABLE | 34566-1363 | 0 | A | BLACK | 73 |
| SALEABLE | NOT APPLICABLE | 34566-1373 | 0 | B | ST GRY | 73 |
| SALEABLE | NOT APPLICABLE | 34566-1383 | 0 | B | ST GRY | 73 |
| SALEABLE | NOT APPLICABLE | 34566-1393 | 0 | A | BLACK | 70 67 66 61 58 57 55 54<br>47 45 44 43 42 41 39 37 34<br>73 32 30 27 25 24 21 20 19 18<br>13 11 6 5 3 1 |
| SALEABLE | NOT APPLICABLE | 34566-1423 | 0 | B | ST GRY | 68 67 66 65 61 60 59 58 57 54 53<br>51 50 49 48 47 46 45 43 42 41 40 39 38 37 35 34 33<br>73 32 31 30 26 24 23 22 21 20<br>16 15 14 13 10 9 8 7 6 5 4 |
| SALEABLE | NOT APPLICABLE | 34566-1433 | 0 | B | ST GRY | 73 |
| SALEABLE | NOT APPLICABLE | 34566-1443 | 0 | B | ST GRY | 73 |
| SALEABLE | NOT APPLICABLE | 34566-1453 | 0 | B | ST GRY | 73 |
| SALEABLE | NOT APPLICABLE | 34566-1463 | 0 | A | BLACK | 52 50 49 68 67 66 65 64 63 62 61 60 59 58 56 41 38 37 36 34 33<br>73 32 31 30 29 28 27 24 23 20 19 18 17<br>16 13 12 11 10 9 7 6 4 3 1 |

# MX123 52/66/73/80-WAY RECEPTACLE ASSY SEALED PIN OUT SHEET

| STATUS | GM PART # | HRNS CONN ASSY | | | TPA | GROMMET CAP |
|---|---|---|---|---|---|---|
| | | MATERIAL/PART NUMBER | WIRE DRESS OPTION | KEY OPTION Fp | COLOR OPTION Fp | NUMBERS INDICATE CAVITIES OPEN FOR CIRCUITS Fp |
| SALEABLE | NOT APPLICABLE | 34566-1473 | 0 | A | BLACK | 72 71 69 68 67 66 64 63 62 59 54 53<br>52 49 48 46 44 43 42 39 34 33<br>73 32 29 27 24 23 17<br>14 13 12 11 9 8 7 6 5 4 3 2 1 |
| SALEABLE | NOT APPLICABLE | 34566-1483 | 0 | A | BLACK | 72 71 69 68 65 64 63 61 59 58 56<br>52 50 49 47 41 38 37 36 34 33<br>73 32 31 30 29 28 27 24 23 20 19 18 17<br>16 13 12 11 10 9 1 |
| SALEABLE | NOT APPLICABLE | 34566-1493 | 0 | B | ST GRY | 68 59 58 57 55 53<br>49 48 46 39 38 37 35 33<br>73 29 23 22 21 18 17<br>12 11 10 7 |
| SALEABLE | NOT APPLICABLE | 34566-1513 | 0 | B | ST GRY | 65 59 57 55 53<br>49 48 46 39 37 35 33<br>73 29 23 21 17<br>12 7 |
| SALEABLE | NOT APPLICABLE | 34566-1523 | 0 | A | BLACK | 70 69 68 65 64 59 58 56 54<br>52 50 49 47 42 41 38 37 36 34<br>73 32 31 30 29 28 27 26 23 20 19 18 17<br>16 13 12 11 10 9 8 1 |
| SALEABLE | NOT APPLICABLE | 34566-1533 | 0 | A | BLACK | 72 71 70 69 68 65 64 63 61 59 58 57 56<br>52 51 50 49 47 41 38 37 36 34 33<br>73 32 31 30 29 28 27 24 23 20 19 18 17<br>16 13 12 11 10 9 3 2 1 |
| SALEABLE | NOT APPLICABLE | 34566-1543 | 0 | B | ST GRY | 69 68 66 59 57 55 53<br>49 48 46 39 37 35 33<br>73 29 23 21<br>11 10 7 |
| SALEABLE | 12582677 | 34566-1553 | 0 | A | BLACK | 73 |
| TOOL DESIGN SALEABLE | NOT APPLICABLE | 34566-1563 | 9 | A | BLACK | 73 |
| TOOL DESIGN SALEABLE | NOT APPLICABLE | 34566-1573 | 9 | H | ST GRY | |
| SALEABLE | NOT APPLICABLE | 34566-1583 | 0 | A | BLACK | 70 67 66 65 61 58 57 55 54<br>49 47 45 44 43 42 41 39 37 34<br>73 32 30 27 25 24 21 20 19 18 17<br>15 13 11 9 8 6 5 3 1 |
| SALEABLE | NOT APPLICABLE | 34566-1593 | 0 | B | ST GRY | 67 65 61 60 59 58 57 54 53<br>51 50 49 48 47 46 45 43 42 40 39 37 34 33<br>73 32 31 30 26 24 23 22 21 20<br>16 15 14 13 10 9 8 7 6 5 4 |
| SALEABLE | NOT APPLICABLE | 34566-1613 | 0 | H | ST GRY | 79 78 77 76 75 74 73 72 71 70 69 68 66 65 64 63 61<br>60 59 58 57 56 53 50 44 43 41<br>40 39 38 37 35 34 33 32 30 29 27 26 24 23 22 21<br>20 19 18 17 14 13 12 11 10 9 8 6 5 3 2 |
| SALEABLE | NOT APPLICABLE | 34566-1623 | 0 | B | ST GRY | 66 65 62 59 57 55 53<br>48 47 42 39 37 35 33<br>73 29 26 23 21 17<br>12 9 7 |
| SALEABLE | NOT APPLICABLE | 34566-1633 | 0 | B | ST GRY | 69 68 66 59 57 55 53<br>50 48 47 39 37 35 33<br>73 29 23 21 17<br>15 12 11 10 7 6 5 4 3 |

# MX123 52/66/73/80-WAY RECEPTACLE ASSY SEALED PIN OUT SHEET

| STATUS | GM PART # | HRNS CONN ASSY | | | TPA | GROMMET CAP | | | | | | | | | | | | | | | | | | |
|---|---|---|---|---|---|---|---|---|---|---|---|---|---|---|---|---|---|---|---|---|---|---|---|---|
| | | MATERIAL/PART NUMBER | WIRE DRESS OPTION | KEY OPTION Fp | COLOR OPTION Fp | NUMBERS INDICATE CAVITIES OPEN FOR CIRCUITS Fp | | | | | | | | | | | | | | | | | | |
| SALEABLE | NOT APPLICABLE | 34566-1643 | 0 | B | ST GRY | | | | 69 | 68 | | 66 | | | | | | | 59 | | 57 | | 55 | | 53 |
| | | | | | | | | 50 | | 48 | | 46 | | | | | | | 39 | | 37 | | 35 | | 33 |
| | | | | | | 73 | | | | | | | 29 | | | | | | 23 | | 21 | | | | 17 |
| | | | | | | | | | | | 15 | | | 12 | 11 | 10 | | | 7 | 6 | 5 | 4 | 3 | | |
| SALEABLE | NOT APPLICABLE | 34566-1653 | 0 | B | ST GRY | | | | | | | 66 | | | | | | | 59 | | 57 | | 55 | | 53 |
| | | | | | | | | 50 | | 48 | | 46 | | | | | | | 39 | | 37 | | 35 | | 33 |
| | | | | | | 73 | | | | | | | 29 | | | | | | 23 | | 21 | | | | 17 |
| | | | | | | | | | | | 15 | | | 12 | | | | | 7 | 6 | 5 | 4 | 3 | | |
| SALEABLE | NOT APPLICABLE | 34566-1663 | 0 | B | ST GRY | | | | | | | 66 | | | | | | | 59 | | 57 | | 55 | | 53 |
| | | | | | | | | 50 | | 48 | | 46 | | | | | | | 39 | | 37 | | 35 | | 33 |
| | | | | | | 73 | | | | | | | 29 | | | | | | 23 | | 21 | | | | |
| | | | | | | | | | | | 15 | | | | | | | | 7 | 6 | 5 | 4 | 3 | | |
| SALEABLE | NOT APPLICABLE | 34566-1673 | 0 | A | BLACK | 72 | 71 | 70 | 69 | 68 | 67 | 66 | 65 | 64 | 63 | 62 | | 60 | 59 | | | | 55 | 54 | 53 |
| | | | | | | 52 | | | 49 | 48 | | | 45 | 44 | 43 | 42 | 41 | 40 | 39 | | | | 35 | 34 | 33 |
| | | | | | | 73 | | | | 32 | | | 29 | | 27 | | 25 | 24 | 23 | | | | 19 | 18 | 17 |
| | | | | | | | | | | 16 | | | 13 | 12 | 11 | | 9 | 8 | 7 | 6 | 5 | 4 | 3 | 2 | 1 |
| SALEABLE | NOT APPLICABLE | 34566-1683 | 0 | B | ST GRY | | | | | | 67 | 66 | | | 63 | | | | 59 | 58 | 57 | 56 | 55 | | 53 |
| | | | | | | | | 50 | 49 | 48 | | | | | 43 | | | | 39 | 38 | 37 | 36 | 35 | | 33 |
| | | | | | | 73 | | | | | | | 29 | | 27 | | | | 23 | 22 | 21 | | | | |
| | | | | | | | | | | 16 | 15 | 14 | 13 | | | | | 8 | 7 | 6 | 5 | 4 | 3 | | |
| SALEABLE | NOT APPLICABLE | 34566-1693 | 0 | B | ST GRY | | | | | | | 66 | | 64 | | | | | 59 | | 57 | | 55 | | 53 |
| | | | | | | | | | 49 | 48 | | 46 | | | | | | | 39 | | 37 | | 35 | | 33 |
| | | | | | | 73 | | | | 32 | | | 29 | | | | | | 23 | | 21 | | | | 17 |
| | | | | | | | | | | | | | | 12 | | | | | 7 | | | | | | |
| SALEABLE | NOT APPLICABLE | 34566-1713 | 0 | B | ST GRY | | 71 | 70 | | 68 | | 66 | 65 | 64 | 63 | | | 60 | 59 | 58 | 57 | 56 | 55 | 54 | 53 |
| | | | | | | | 51 | 50 | 49 | 48 | | 46 | 45 | | 43 | | 41 | 40 | 39 | 38 | 37 | 36 | 35 | | 33 |
| | | | | | | 73 | | | | 32 | 31 | 30 | | | | | | 24 | 23 | 22 | | 20 | 19 | | |
| | | | | | | | | | | 16 | 15 | | 13 | 12 | 11 | 10 | 9 | 8 | 7 | 6 | 5 | 4 | 3 | 2 | |
| SALEABLE | NOT APPLICABLE | 34566-1723 | 0 | B | ST GRY | | 71 | 70 | | 68 | | 66 | 65 | | | | | 60 | 59 | 58 | 57 | | | 54 | 53 |
| | | | | | | | 51 | 50 | 49 | 48 | | 46 | 45 | | 43 | | 41 | 40 | 39 | 38 | 37 | 36 | 35 | | 33 |
| | | | | | | 73 | | | | 32 | 31 | 30 | | | | | | 24 | 23 | 22 | | 20 | | | |
| | | | | | | | | | | 16 | 15 | | 13 | 12 | 11 | 10 | 9 | 8 | 7 | 6 | 5 | 4 | | | |
| SALEABLE | NOT APPLICABLE | 34566-1733 | 0 | A | BLACK | | | 70 | | 68 | 67 | 66 | 65 | | | | | | | 58 | 57 | | 55 | | |
| | | | | | | | | | 49 | | 47 | | | 44 | 43 | 42 | 41 | | 39 | | 37 | | 35 | | |
| | | | | | | 73 | | | | 32 | | 30 | | | 27 | | 25 | 24 | | | 21 | 20 | 19 | 18 | 17 |
| | | | | | | | | | | 16 | 15 | | 13 | | | 10 | 9 | 8 | | 6 | 5 | | 3 | 2 | 1 |
| SALEABLE | NOT APPLICABLE | 34566-1743 | 0 | A | BLACK | | | 70 | | | 67 | 66 | 65 | | | | | | | 58 | 57 | | 55 | | |
| | | | | | | | | | 49 | | 47 | | | 44 | 43 | 42 | 41 | | 39 | | 37 | | 35 | | |
| | | | | | | 73 | | | | 32 | | 30 | | | 27 | | 25 | 24 | | | 21 | 20 | 19 | 18 | 17 |
| | | | | | | | | | | 16 | 15 | | 13 | | | 10 | 9 | 8 | | 6 | 5 | | 3 | 2 | 1 |
| SALEABLE | NOT APPLICABLE | 34566-1753 | 0 | A | BLACK | | | 70 | | | 67 | 66 | 65 | | | | | | | 58 | 57 | | 55 | | |
| | | | | | | | | | 49 | | 47 | | | 44 | 43 | 42 | 41 | | 39 | | 37 | | 35 | | |
| | | | | | | 73 | | | | 32 | | | | | 27 | | 25 | 24 | | | 21 | 20 | 19 | 18 | 17 |
| | | | | | | | | | | | 15 | | 13 | | | | 9 | 8 | | 6 | 5 | | 3 | | 1 |
| SALEABLE | NOT APPLICABLE | 34566-1763 | 0 | B | ST GRY | | | | | | 67 | | 65 | | | | 61 | 60 | 59 | 58 | 57 | | | 54 | 53 |
| | | | | | | | 51 | 50 | 49 | 48 | 47 | 46 | 45 | | 43 | | | 40 | 39 | | 37 | | | 34 | 33 |
| | | | | | | 73 | | | | 32 | 31 | 30 | | | | 26 | | 24 | 23 | 22 | 21 | 20 | | | |
| | | | | | | | | | | 16 | 15 | 14 | 13 | | | 10 | 9 | 8 | 7 | 6 | 5 | 4 | | | |
| SALEABLE | NOT APPLICABLE | 34566-1773 | 0 | C | BLUE | 72 | | 70 | | | 67 | 66 | | | 63 | 62 | | | 59 | | 57 | | | | 53 |
| | | | | | | 52 | 51 | | | | | 46 | | 44 | | 42 | | 40 | 39 | | | | | 34 | 33 |
| | | | | | | 73 | | | | | | 30 | | | 27 | 26 | 25 | | | 22 | 21 | 20 | | | |
| | | | | | | | | | | | 15 | 14 | | | | 10 | 9 | | | 6 | 5 | 4 | | | |
| SALEABLE | NOT APPLICABLE | 34566-1783 | 0 | C | BLUE | 72 | | 70 | | | 67 | 66 | | | 63 | 62 | | | 59 | | 57 | | | | 53 |
| | | | | | | 52 | 51 | | | | | 46 | | 44 | | 42 | | 40 | 39 | | | | | 34 | 33 |
| | | | | | | 73 | | | | | | 30 | | | | 26 | 25 | | | 22 | 21 | 20 | | | |
| | | | | | | | | | | | 15 | 14 | | | | 10 | 9 | | | 6 | 5 | 4 | | | |
| SALEABLE | NOT APPLICABLE | 34566-1793 | 0 | A | BLACK | | | | 69 | | | | | | 63 | 62 | 61 | | | 58 | 57 | 56 | 55 | 54 | 53 |
| | | | | | | 52 | 51 | | 49 | | | | | 44 | 43 | 42 | 41 | | | | 37 | 36 | 35 | 34 | 33 |
| | | | | | | 73 | | | | 32 | | | 29 | 28 | 27 | 26 | | | | | | | 19 | 18 | |
| | | | | | | | | | | 16 | | | 13 | 12 | 11 | 10 | | | | | | | 3 | | |

molex

# MX123 52/66/73/80-WAY RECEPTACLE ASSY SEALED PIN OUT SHEET

| STATUS | GM PART # | HRNS CONN ASSY | | | TPA | GROMMET CAP |
|---|---|---|---|---|---|---|
| | | MATERIAL/PART NUMBER | WIRE DRESS OPTION | KEY OPTION Fp | COLOR OPTION Fp | NUMBERS INDICATE CAVITIES OPEN FOR CIRCUITS Fp |
| SALEABLE | NOT APPLICABLE | 34566-1813 | 0 | B | ST GRY | 72 71 70 68 67 66 62 61 60 59 58 57 56 55 54 53<br>52 51 50 48 47 46 42 41 40 39 38 37 36 35 34 33<br>73 32 31 30 29 28 27 26 25 24 23<br>16 15 14 13 10 9 8 |
| SALEABLE | NOT APPLICABLE | 34566-1823 | 0 | A | BLACK | 72 71 70 69 68 66 65 64 61 59 58 56 54 53<br>52 50 49 47 42 41 38 37 36 34 33<br>73 32 31 30 29 28 27 26 24 23 22 21 20 19 18 17<br>16 13 12 11 10 9 8 1 |
| SALEABLE | NOT APPLICABLE | 34566-1833 | 0 | A | BLACK | 68 65 63 61 59 58 56<br>52 50 47 41 38 37 36 34 33<br>73 32 31 30 29 28 27 25 24 23 20 19 18 17<br>16 13 12 11 10 1 |
| SALEABLE | NOT APPLICABLE | 34566-1843 | 0 | A | BLACK | 68 65 63 61 59 58 56 53<br>52 50 47 41 38 37 36 35 34 33<br>73 32 31 30 29 28 27 24 23 22 21 20 19 18 17<br>16 15 14 13 12 11 10 1 |
| SALEABLE | NOT APPLICABLE | 34566-1853 | 0 | A | BLACK | 72 70 69 68 67 65 63 61 60 57 56 55 54 53<br>52 50 49 48 47 44 43 41 40 37 36 35 34 33<br>73 30 29 28 25 24 21 20 19 18 17<br>16 15 11 10 9 8 7 6 5 4 3 2 1 |
| SALEABLE | NOT APPLICABLE | 34566-1863 | 0 | B | ST GRY | 68 67 66 65 64 63<br>46 45 43<br>73 32 30 29 28 27 17<br>16 10 |
| SALEABLE | NOT APPLICABLE | 34566-1873 | 0 | C | BLUE | 72 70 67 66 63 62 59 57 53<br>52 51 46 44 42 40 39 34 33<br>73 32 30 27 26 25 22 21 20<br>15 14 10 9 6 5 4 |
| SALEABLE | NOT APPLICABLE | 34566-1883 | 0 | A | BLACK | 70 68 67 66 65 58 57 55<br>49 47 44 43 42 41 40 39 37 35<br>73 32 30 27 25 24 21 20 19 18 17<br>16 15 13 10 9 8 6 5 3 2 1 |
| SALEABLE | NOT APPLICABLE | 34566-1893 | 0 | C | BLUE | 72 70 66 63 59 57 53<br>52 51 46 44 42 40 39 34 33<br>73 32 30 27 26 25 22 21 20<br>15 14 10 9 6 5 4 |
| SALEABLE | NOT APPLICABLE | 34566-1913 | 0 | B | ST GRY | 72 70 68 66 60 59 55 54 53<br>52 50 48 46 40 39 35 34 33<br>73 32 31 30 29 28 27 26 25 24<br>16 10 9 8 |
| SALEABLE | NOT APPLICABLE | 34566-1923 | 0 | A | BLACK | 69 63 58 56 55 54 53<br>52 51 49 44 43 42 41 36 35 34 33<br>73 32 28 26 19 18<br>16 12 10 3 |
| SALEABLE | NOT APPLICABLE | 34566-1933 | 0 | A | BLACK | 70 67 66 65 58 57 55<br>49 47 44 43 42 41 40 39 37 35<br>73 32 30 27 25 24 21 20 19 18 17<br>16 15 13 10 9 8 6 5 3 2 1 |
| SALEABLE | NOT APPLICABLE | 34566-1943 | 0 | A | BLACK | 70 67 66 65 58 57 55<br>51 49 47 44 43 42 41 40 39 37 35<br>73 32 30 27 25 24 21 20 19 18 17<br>16 15 13 10 9 8 6 5 3 2 1 |
| SALEABLE | NOT APPLICABLE | 34566-1953 | 0 | C | BLUE | 72 70 66 63 59 57 53<br>52 51 48 47 46 44 42 40 39 34 33<br>73 30 26 25 22 21 20<br>15 14 10 9 6 5 4 |
| SALEABLE | NOT APPLICABLE | 34566-1963 | 0 | C | BLUE | 72 70 66 63 59 57 53<br>52 51 46 44 42 40 39 34 33<br>73 30 26 25 22 21 20<br>15 14 10 9 6 5 4 |

# MX123 52/66/73/80-WAY RECEPTACLE ASSY SEALED PIN OUT SHEET

| STATUS | GM PART # | HRNS CONN ASSY | | | TPA | GROMMET CAP |
|---|---|---|---|---|---|---|
| | | MATERIAL/PART NUMBER | WIRE DRESS OPTION | KEY OPTION Fp | COLOR OPTION Fp | NUMBERS INDICATE CAVITIES OPEN FOR CIRCUITS Fp |
| SALEABLE | NOT APPLICABLE | 34566-1973 | 0 | A | BLACK | 69 63 56 55 54 53<br>52 51 49 44 43 42 41 36 35 34 33<br>73 32 28 26 23 21 19 18<br>16 12 10 8 5 3 |
| SALEABLE | NOT APPLICABLE | 34566-1983 | 0 | B | ST GRY | 73 |
| SALEABLE | NOT APPLICABLE | 34566-1993 | 0 | C | BLUE | 73 |
| SALEABLE | NOT APPLICABLE | 34566-2013 | 0 | A | BLACK | 71 70 65 60 59 58 57 54 53<br>51 50 49 48 46 45 43 41 40 39 37 36 35 33<br>73 32 31 30 24 23 22 20<br>16 15 13 12 11 10 9 8 7 6 5 4 |
| SALEABLE | NOT APPLICABLE | 34566-2023 | 0 | A | BLACK | 70 68 67 66 65 58 57 55<br>49 47 44 43 42 41 39 37 35<br>73 32 30 27 25 24 21 20 19 18 17<br>15 13 9 8 6 5 3 1 |
| SALEABLE | NOT APPLICABLE | 34566-2033 | 0 | A | BLACK | 71 70 65 64 60 59 58 57 55 54 53<br>51 50 49 48 46 45 43 41 40 39 37 36 35 33<br>73 32 31 30 24 23 22 20<br>16 15 13 12 11 10 9 8 7 6 5 4 3 2 |
| SALEABLE | NOT APPLICABLE | 34566-2043 | 0 | A | BLACK | 70 67 66 65 58 57 55<br>49 47 44 43 42 41 39 37 35<br>73 32 30 27 25 24 21 20 19 18 17<br>15 13 9 8 6 5 3 1 |
| SALEABLE | NOT APPLICABLE | 34566-2053 | 0 | B | ST GRY | 70 68 67 66 65 58 57 55<br>49 47 44 43 42 41 39 37<br>73 32 30 27 25 24 23 21 20 19 18<br>13 8 6 5 3 1 |
| SALEABLE | NOT APPLICABLE | 34566-2063 | 0 | H | ST GRY | 78 72 71 70 69 68 66 65 64 63 61<br>58 57 56 53 52 50 44 43 41<br>40 37 35 34 32 30 29 27 26 22 21<br>20 19 18 17 16 14 12 10 9 8 6 5 3 2 |
| SALEABLE | NOT APPLICABLE | 34566-2073 | 0 | H | ST GRY | 78 72 71 70 69 68 66 65 64 63 61<br>58 57 56 53 52 50 44 43 41<br>40 37 35 34 32 30 29 27 26 22 21<br>20 19 18 17 16 12 6 5 3 2 |
| SALEABLE | NOT APPLICABLE | 34566-2083 | 0 | H | ST GRY | 78 72 71 70 69 68 67 66 65 64 63 61<br>58 57 56 53 52 51 50 44 43 41<br>40 37 35 34 32 30 29 27 26 22 21<br>20 19 18 17 16 12 8 7 6 5 3 2 1 |
| SALEABLE | NOT APPLICABLE | 34566-2093 | 0 | A | BLACK | 68 65 63 61 59 58 56<br>52 50 47 41 38 37 36 34 33<br>73 32 31 30 29 28 27 25 24 23 20 19 18 17<br>16 13 12 11 10 9 1 |
| SALEABLE | NOT APPLICABLE | 34566-2113 | 0 | H | ST GRY | 79 78 77 76 75 74 73 72 71 70 69 68 66 65 64 63 61<br>60 59 58 57 56 55 53 52 50 44 43 42 41<br>40 39 38 37 35 34 33 32 30 29 27 26 22 21<br>20 19 18 17 16 14 13 12 11 10 9 8 6 5 3 2 |
| SALEABLE | NOT APPLICABLE | 34566-2123 | 0 | H | ST GRY | 79 78 77 76 75 74 73 72 71 70 69 68 66 65 64 63 61<br>60 59 58 57 56 55 53 52 50 44 43 42 41<br>40 39 38 37 35 34 33 32 30 29 27 26 22 21<br>20 19 18 17 16 13 12 8 6 5 3 2 |
| SALEABLE | NOT APPLICABLE | 34566-2133 | 0 | B | ST GRY | 71 70 65 64 60 59 58 57 55 54 53<br>51 50 49 48 46 45 43 41 40 39 37 36 35 33<br>73 32 31 30 24 23 22 20<br>16 15 13 12 11 10 9 8 7 6 5 4 3 2 |

# MX123 52/66/73/80-WAY RECEPTACLE ASSY SEALED PIN OUT SHEET

| STATUS | GM PART # | HRNS CONN ASSY | | | TPA | GROMMET CAP | | | | | | | | | | | | | | | | | | | | |
|---|---|---|---|---|---|---|---|---|---|---|---|---|---|---|---|---|---|---|---|---|---|---|---|---|---|---|
| | | MATERIAL/PART NUMBER | WIRE DRESS OPTION | KEY OPTION Fp | COLOR OPTION Fp | NUMBERS INDICATE CAVITIES OPEN FOR CIRCUITS Fp | | | | | | | | | | | | | | | | | | | | |
| SALEABLE | NOT APPLICABLE | 34566-2143 | 0 | B | ST GRY | | 71 | 70 | | | | | 65 | | | | | 60 | 59 | 58 | 57 | | | 54 | 53 |
| | | | | | | | 51 | 50 | 49 | 48 | | 46 | 45 | | 43 | | 41 | 40 | 39 | | 37 | 36 | 35 | | 33 |
| | | | | | | 73 | | | | 32 | 31 | 30 | | | | | | 24 | 23 | 22 | | 20 | | | |
| | | | | | | | | | | 16 | 15 | | 13 | 12 | 11 | 10 | 9 | 8 | 7 | 6 | 5 | 4 | | | |
| SALEABLE | NOT APPLICABLE | 34566-2153 | 0 | A | BLACK | | | 70 | | 68 | 67 | 66 | 65 | | | | | | | 58 | 57 | | 55 | | |
| | | | | | | | | | 49 | | 47 | | | 44 | 43 | 42 | 41 | | 39 | | 37 | | | | |
| | | | | | | 73 | | | | 32 | | 30 | | | 27 | | 25 | 24 | 23 | | 21 | 20 | 19 | 18 | |
| | | | | | | | | | | | | | 13 | | | | | 8 | | 6 | 5 | | 3 | | 1 |
| SALEABLE | NOT APPLICABLE | 34566-2163 | 0 | A | BLACK | | | 70 | | | 67 | 66 | | | | | 61 | | | 58 | | | 55 | 54 | |
| | | | | | | | | | 49 | | 47 | | 45 | 44 | 43 | 42 | 41 | | 39 | | 37 | | | 34 | |
| | | | | | | 73 | | | | 32 | | | | | 27 | | | 24 | | | 21 | 20 | 19 | 18 | 17 |
| | | | | | | | | | | | 15 | | 13 | | 11 | | 9 | | | 6 | 5 | | 3 | | 1 |
| SALEABLE | NOT APPLICABLE | 34566-2173 | 0 | A | BLACK | | | 70 | | | 67 | 66 | 65 | | | | 61 | | | 58 | | | 55 | 54 | |
| | | | | | | | | | 49 | | 47 | | 45 | 44 | 43 | 42 | 41 | | 39 | | 37 | | | 34 | |
| | | | | | | 73 | | | | 32 | | 30 | | | 27 | | 25 | 24 | | | 21 | 20 | 19 | 18 | 17 |
| | | | | | | | | | | | 15 | | 13 | | 11 | | 9 | 8 | | 6 | 5 | | 3 | | 1 |
| SALEABLE | NOT APPLICABLE | 34566-2183 | 0 | A | BLACK | | | 70 | | | 67 | 66 | | | | | | | | 58 | 57 | | 55 | | |
| | | | | | | | | | 49 | | 47 | | | 44 | 43 | 42 | 41 | | 39 | | 37 | | | | |
| | | | | | | 73 | | | | 32 | | | | | 27 | | | 24 | | | 21 | 20 | 19 | 18 | 17 |
| | | | | | | | | | | | 15 | | 13 | | | | 9 | | | 6 | 5 | | 3 | | 1 |
| SALEABLE | NOT APPLICABLE | 34566-2193 | 0 | A | BLACK | | | 70 | | | 67 | 66 | 65 | | | | | | | 58 | 57 | | 55 | | |
| | | | | | | | | | 49 | | 47 | | | 44 | 43 | 42 | 41 | | 39 | | 37 | | | | |
| | | | | | | 73 | | | | 32 | | 30 | | | 27 | | 25 | 24 | | | 21 | 20 | 19 | 18 | 17 |
| | | | | | | | | | | | 15 | | 13 | | | | 9 | 8 | | 6 | 5 | | 3 | | 1 |
| SALEABLE | NOT APPLICABLE | 34566-2213 | 9 | H | ST GRY | | 79 | 78 | 77 | 76 | 75 | 74 | 73 | 72 | 71 | 70 | 69 | 68 | | 66 | 65 | 64 | 63 | | 61 |
| | | | | | | 60 | 59 | 58 | 57 | 56 | | | 53 | | | 50 | | | | | | 44 | 43 | | 41 |
| | | | | | | 40 | 39 | 38 | 37 | | 35 | 34 | 33 | 32 | | 30 | 29 | | 27 | 26 | | 24 | 23 | 22 | 21 |
| | | | | | | 20 | 19 | 18 | 17 | | | 14 | 13 | 12 | 11 | 10 | 9 | 8 | | 6 | 5 | | 3 | 2 | |
| SALEABLE | NOT APPLICABLE | 34566-2223 | 0 | A | BLACK | 72 | 71 | 70 | 69 | 68 | 67 | 66 | | 64 | 63 | 62 | | 60 | 59 | | | | 55 | 54 | 53 |
| | | | | | | 52 | | | 49 | 48 | | 46 | | 44 | 43 | 42 | | 40 | 39 | | | | 35 | 34 | 33 |
| | | | | | | 73 | | | | 32 | | | 29 | | 27 | | | 24 | 23 | | | | 19 | 18 | 17 |
| | | | | | | | | | | 16 | | 14 | 13 | 12 | 11 | | 9 | 8 | 7 | 6 | 5 | 4 | 3 | 2 | 1 |
| SALEABLE | NOT APPLICABLE | 34566-2233 | 0 | A | BLACK | | | | 69 | | | | | | 63 | | | | | 58 | | 56 | | 54 | |
| | | | | | | 52 | 51 | | 49 | | | | | 44 | 43 | 42 | 41 | | | | | 36 | 35 | 34 | 33 |
| | | | | | | 73 | | | | 32 | | | | 28 | | 26 | | | | | | | 19 | 18 | |
| | | | | | | | | | | 16 | | | | 12 | | 10 | | | | | | | 3 | | |
| SALEABLE | NOT APPLICABLE | 34566-2243 | 0 | H | ST GRY | | 79 | 78 | 77 | 76 | 75 | 74 | 73 | 72 | 71 | 70 | 69 | 68 | | 66 | 65 | 64 | 63 | | 61 |
| | | | | | | 60 | 59 | 58 | 57 | 56 | | | 53 | 52 | | 50 | | | | | | 44 | 43 | | 41 |
| | | | | | | 40 | 39 | 38 | 37 | | 35 | 34 | 33 | 32 | | 30 | 29 | | 27 | 26 | | 24 | 23 | 22 | 21 |
| | | | | | | 20 | 19 | 18 | 17 | 16 | | 14 | 13 | 12 | 11 | 10 | 9 | 8 | | 6 | 5 | | 3 | 2 | |
| SALEABLE | NOT APPLICABLE | 34566-2253 | 0 | A | BLACK | 72 | 71 | 70 | 69 | 68 | | 66 | 65 | 64 | 63 | | 61 | | 59 | 58 | | 56 | | 54 | 53 |
| | | | | | | 52 | | 50 | 49 | | 47 | | | | | 42 | 41 | | | 38 | 37 | 36 | | 34 | 33 |
| | | | | | | 73 | | | | 32 | 31 | 30 | 29 | 28 | 27 | 26 | | 24 | 23 | 22 | 21 | 20 | 19 | 18 | 17 |
| | | | | | | | | | | 16 | | | 13 | 12 | 11 | 10 | 9 | 8 | | | | | | | 1 |
| SALEABLE | NOT APPLICABLE | 34566-2263 | 0 | A | BLACK | | | | 69 | | | | | | 63 | | | | | 58 | | 56 | 55 | 54 | 53 |
| | | | | | | 52 | 51 | 50 | 49 | | | | | 44 | 43 | 42 | 41 | | | | | 36 | 35 | 34 | 33 |
| | | | | | | 73 | | | | 32 | | | | 28 | | 26 | | | | | | | 19 | 18 | |
| | | | | | | | | | | 16 | | 14 | | 12 | | 10 | | | | | | | 3 | | |
| SALEABLE | NOT APPLICABLE | 34566-2273 | 0 | A | BLACK | | | | 69 | | | | | | 63 | 62 | 61 | | | 58 | 57 | 56 | 55 | 54 | 53 |
| | | | | | | 52 | 51 | 50 | 49 | | | | | 44 | 43 | 42 | 41 | | | | 37 | 36 | 35 | 34 | 33 |
| | | | | | | 73 | | | | 32 | | | 29 | 28 | 27 | 26 | | | | | | | 19 | 18 | |
| | | | | | | | | | | 16 | | 14 | 13 | 12 | 11 | 10 | | | | | | | 3 | | |
| SALEABLE | NOT APPLICABLE | 34566-2283 | 0 | B | ST GRY | | | | | 68 | 67 | 66 | 65 | 64 | 63 | | | | | | | | 55 | | |
| | | | | | | | | | 49 | 48 | | 46 | 45 | 44 | 43 | | | | | | | | | | |
| | | | | | | 73 | | | | 32 | | 30 | 29 | 28 | 27 | | | | | | | | | | 17 |
| | | | | | | | | | | 16 | | | | | | 10 | | | | | | | | | |
| SALEABLE | NOT APPLICABLE | 34566-2293 | 0 | C | BLUE | 72 | | 70 | | 68 | | 66 | | | 63 | | | | 59 | | 57 | | | | 53 |
| | | | | | | 52 | 51 | | | 48 | 47 | 46 | | 44 | | 42 | | 40 | 39 | | | | | 34 | 33 |
| | | | | | | 73 | | | | | | 30 | | | | 26 | 25 | | | 22 | 21 | | | | |
| | | | | | | | | | | | 15 | 14 | | | | 10 | 9 | | | 6 | | | | | |

# MX123 52/66/73/80-WAY RECEPTACLE ASSY SEALED PIN OUT SHEET

| STATUS | GM PART # | HRNS CONN ASSY | | | TPA | GROMMET CAP |
|---|---|---|---|---|---|---|
| | | MATERIAL/PART NUMBER | WIRE DRESS OPTION | KEY OPTION Fp | COLOR OPTION Fp | NUMBERS INDICATE CAVITIES OPEN FOR CIRCUITS Fp |
| SALEABLE | NOT APPLICABLE | 34566-2313 | 0 | C | BLUE | 72 70 66 63 59 57 53<br>52 51 46 44 42 40 39 34 33<br>73 30 26 25 22 21<br>15 14 10 9 6 |
| SALEABLE | NOT APPLICABLE | 34566-2323 | 0 | C | BLUE | 72 70 68 66 63 59 57 53<br>52 51 48 47 46 44 42 40 39 34 33<br>73 30 26 25 22 21 20<br>15 14 10 9 6 5 4 |
| SALEABLE | NOT APPLICABLE | 34566-2333 | 0 | A | BLACK | 71 69 68 65 64 63 61 59 57 56<br>52 50 49 47 41 39 38 37 36 34 33<br>73 32 31 30 29 28 27 24 23 22 20 19 18<br>16 13 12 11 10 9 1 |
| SALEABLE | NOT APPLICABLE | 34566-2343 | 0 | A | BLACK | 72 70 68 67 66 65 58 57 55<br>49 47 44 43 42 41 39 37 35<br>73 32 30 27 25 24 21 20 19 18 17<br>15 14 13 9 8 6 5 3 1 |
| SALEABLE | NOT APPLICABLE | 34566-2353 | 0 | A | BLACK | 72 70 67 66 65 58 57 55<br>49 47 44 43 42 41 39 37 35<br>73 32 30 27 25 24 21 20 19 18 17<br>15 14 13 9 8 6 5 3 1 |
| SALEABLE | NOT APPLICABLE | 34566-2363 | 0 | C | BLUE | 72 70 67 66 63 62 59 57 53<br>52 51 46 44 42 40 39 38 34 33<br>73 30 27 26 25 22 21 20<br>15 14 10 9 6 5 4 |
| SALEABLE | NOT APPLICABLE | 34566-2373 | 0 | B | ST GRY | 68 67 66 65 64 61 60 59 58 57 55 54 53<br>51 50 49 48 47 46 45 43 42 41 40 39 38 37 35 34 33<br>73 32 31 30 26 24 23 22 21 20<br>16 15 14 13 10 9 8 7 6 5 4 3 2 |
| SALEABLE | NOT APPLICABLE | 34566-2383 | 0 | B | ST GRY | 65 59 57 55 53<br>50 49 48 46 39 37 35 33<br>73 29 24 23 21<br>15 7 6 5 4 3 |
| SALEABLE | NOT APPLICABLE | 34566-2393 | 0 | B | ST GRY | 59 57 55 53<br>50 49 48 46 39 37 35 33<br>73 29 23 21 17<br>15 12 7 6 5 4 3 |
| SALEABLE | NOT APPLICABLE | 34566-2413 | 0 | A | BLACK | 70 67 66 65 58 57 55<br>49 47 44 43 42 41 39 37 35<br>73 32 30 27 25 24 21 20 19 18 17<br>15 14 13 9 8 6 5 3 1 |
| SALEABLE | NOT APPLICABLE | 34566-2423 | 0 | A | BLACK | 63 58 57 56 55 54 53<br>52 51 49 44 43 42 41 36 35 34 33<br>73 32 28 26 19 18<br>16 12 10 7 6 3 |
| SALEABLE | NOT APPLICABLE | 34566-2433 | 0 | A | BLACK | 69 63 56 55 54 53<br>52 51 49 44 43 42 41 36 35 34 33<br>73 32 28 26 23 19 18<br>16 12 10 7 6 3 |
| SALEABLE | NOT APPLICABLE | 34566-2443 | 0 | C | BLUE | 72 70 68 66 63 59 57 53<br>52 51 48 47 46 44 40 39 34 33<br>73 32 30 26 25 22 21 20<br>15 14 13 10 9 6 5 4 |
| SALEABLE | NOT APPLICABLE | 34566-2453 | 0 | A | BLACK | 71 69 65 64 63 58 57 56 55 54 53<br>52 51 49 45 44 43 42 41 37 36 35 34 33<br>73 32 30 28 26 23 19 18<br>16 12 10 7 6 3 |
| SALEABLE | NOT APPLICABLE | 34566-2463 | 0 | A | BLACK | 71 69 65 64 63 57 56 55 54 53<br>52 51 49 45 44 43 42 41 37 36 35 34 33<br>73 32 30 29 28 26 23 19 18<br>16 12 10 7 6 3 |

# MX123 52/66/73/80-WAY RECEPTACLE ASSY SEALED PIN OUT SHEET

| STATUS | GM PART # | HRNS CONN ASSY | | | TPA | GROMMET CAP |
|---|---|---|---|---|---|---|
| | | MATERIAL/PART NUMBER | WIRE DRESS OPTION | KEY OPTION Fp | COLOR OPTION Fp | NUMBERS INDICATE CAVITIES OPEN FOR CIRCUITS Fp |
| SALEABLE | NOT APPLICABLE | 34566-2473 | 0 | A | BLACK | 73: 70, 68, 67, 66, 65, 58, 57, 55; 49, 47, 44, 43, 42, 41, 39, 37, 35; 32, 30, 27, 25, 24, 21, 20, 19, 18, 17; 15, 14, 13, 9, 8, 6, 5, 3, 1 |
| SALEABLE | NOT APPLICABLE | 34566-2483 | 0 | A | BLACK | 73: 69, 63, 62, 61, 58, 57, 56, 55, 54, 53; 52, 51, 49, 44, 43, 42, 41, 37, 36, 35, 34, 33; 32, 29, 28, 27, 26, 23, 19, 18; 16, 13, 12, 11, 10, 8, 3 |
| SALEABLE | NOT APPLICABLE | 34566-2493 SAME AS P/N 34566-3863 | 0 | B | ST GRY | 73: 72, 71, 70, 68, 67, 66, 62, 61, 60, 59, 58, 57, 56, 55, 54, 53; 52, 51, 50, 48, 47, 46, 42, 41, 40, 39, 38, 37, 36, 35, 34, 33; 32, 31, 30, 29, 28, 27, 26, 25, 24, 17; 16, 15, 14, 13, 10, 8, 2, 1 |
| SALEABLE | NOT APPLICABLE | 34566-2513 | 0 | C | BLUE | 73: 72, 70, 68, 67, 66, 63, 62, 59, 57, 53; 52, 51, 48, 47, 46, 44, 42, 40, 39, 34, 33; 32, 30, 27, 26, 25, 22, 21, 20; 15, 14, 10, 9, 6, 5, 4 |
| SALEABLE | NOT APPLICABLE | 34566-2523 | 0 | A | BLACK | 73: 72, 71, 70, 69, 68, 67, 66, 65, 64, 63, 62, 60, 59, 55, 54, 53; 52, 49, 48, 45, 44, 43, 42, 41, 40, 39, 35, 34, 33; 32, 29, 28, 27, 25, 24, 23, 19, 18, 17; 16, 13, 12, 11, 9, 8, 7, 6, 5, 4, 3, 2, 1 |
| SALEABLE | NOT APPLICABLE | 34566-2533 | 0 | B | ST GRY | 73: 67, 66, 65, 63, 59, 58, 57, 56, 55, 53; 50, 49, 48, 46, 45, 43, 39, 38, 37, 36, 35, 34, 33; 29, 27, 23, 22, 21, 18; 16, 15, 14, 13, 8, 7, 6, 5, 4, 3 |
| SALEABLE | NOT APPLICABLE | 34566-2543 | 0 | C | BLUE | 73: 72, 70, 66, 63, 59, 57, 53; 52, 51, 46, 44, 42, 40, 39, 34, 33; 32, 30, 27, 26, 25, 22, 21; 15, 14, 10, 9, 6 |
| SALEABLE | NOT APPLICABLE | 34566-2553 | 9 | B | ST GRY | 73: 72, 71, 70, 68, 67, 66, 62, 61, 60, 59, 58, 57, 56, 55, 54, 53; 52, 51, 50, 48, 47, 46, 42, 41, 40, 39, 38, 37, 36, 35, 34, 33; 32, 31, 30, 29, 28, 27, 26, 25, 24, 23; 16, 15, 14, 13, 10, 9, 8 |
| SALEABLE | NOT APPLICABLE | 34566-2563 | 9 | A | BLACK | 73: 69, 63, 62, 61, 58, 57, 56, 55, 54, 53; 52, 51, 50, 49, 44, 43, 42, 41, 37, 36, 35, 34, 33; 32, 29, 28, 27, 26, 19, 18; 16, 14, 13, 12, 11, 10, 3 |
| SALEABLE | NOT APPLICABLE | 34566-2573 | 9 | C | BLUE | 73: 72, 70, 67, 66, 63, 62, 59, 57, 53; 52, 51, 46, 44, 42, 40, 39, 34, 33; 30, 26, 25, 22, 21, 20; 15, 14, 10, 9, 6, 5, 4 |
| SALEABLE | NOT APPLICABLE | 34566-2583 | 0 | A | BLACK | 73: 69, 63, 58, 56, 55, 54, 53; 52, 51, 50, 49, 44, 43, 42, 41, 39, 36, 35, 34, 33; 32, 28, 26, 19, 18; 16, 14, 12, 10, 3 |
| SALEABLE | NOT APPLICABLE | 34566-2593 | 0 | C | BLUE | 73: 72, 70, 66, 63, 62, 59, 57, 53; 52, 51, 46, 44, 42, 40, 39, 34, 33; 32, 30, 27, 26, 25, 22, 21; 15, 14, 10, 9, 6 |
| SALEABLE | NOT APPLICABLE | 34566-2613 | 9 | C | BLUE | 73: 72, 70, 67, 66, 63, 62, 59, 57, 53; 52, 51, 46, 44, 42, 40, 39, 34, 33; 30, 27, 26, 25, 22, 21, 20; 15, 14, 10, 9, 6, 5, 4 |
| SALEABLE | NOT APPLICABLE | 34566-2623 | 0 | A | BLACK | 73: 71, 69, 68, 67, 65, 64, 63, 61, 59, 57, 56; 50, 49, 47, 41, 38, 37, 36, 34, 33; 32, 31, 30, 29, 28, 27, 24, 23, 20, 19, 18; 16, 13, 12, 11, 10, 9, 7, 4 |
| SALEABLE | NOT APPLICABLE | 34566-2633 | 0 | A | BLACK | 73: 71, 69, 68, 67, 65, 64, 61, 59, 57, 56; 50, 49, 47, 41, 38, 37, 36, 33; 32, 31, 30, 29, 28, 27, 24, 23, 20, 19, 18; 16, 11, 10, 9, 7, 4 |

molex

# MX123 52/66/73/80-WAY RECEPTACLE ASSY SEALED PIN OUT SHEET

| STATUS | GM PART # | HRNS CONN ASSY | | | TPA | GROMMET CAP |
|---|---|---|---|---|---|---|
| | | MATERIAL/PART NUMBER | WIRE DRESS OPTION | KEY OPTION Fp | COLOR OPTION Fp | NUMBERS INDICATE CAVITIES OPEN FOR CIRCUITS Fp |
| SALEABLE | NOT APPLICABLE | 34566-2643 | 0 | A | BLACK | 71 69 68 67 65 64 63 61 59 57 56<br>50 49 47 41 39 38 37 36 34 33<br>73 32 31 30 29 28 27 24 23 22 20 19 18<br>16 13 12 11 10 9 7 4 |
| SALEABLE | NOT APPLICABLE | 34566-2653 | 0 | A | BLACK | 71 69 68 67 65 64 61 59 57 56<br>50 49 47 41 39 38 37 36 33<br>73 32 31 30 29 28 27 24 23 22 20 19 18<br>16 11 10 9 7 4 |
| SALEABLE | NOT APPLICABLE | 34566-2663 | 0 | H | ST GRY | 79 78 77 76 75 74 73 72 71 70 69 68 66 65 64 63 61<br>60 59 58 57 56 53 50 44 43 41<br>40 39 38 37 35 34 32 30 29 27 26 22 21<br>20 19 18 17 13 12 8 6 5 3 2 |
| SALEABLE | NOT APPLICABLE | 34566-2673 | 0 | H | ST GRY | 79 78 77 76 75 74 73 72 71 70 69 68 66 65 64 63 61<br>60 59 58 57 56 53 52 50 44 43 41<br>40 39 38 37 35 34 32 30 29 27 26 22 21<br>20 19 18 17 16 13 12 8 6 5 3 2 |
| SALEABLE | NOT APPLICABLE | 34566-2683 | 0 | H | ST GRY | 78 72 71 70 69 68 67 66 65 64 63 61<br>60 59 58 57 56 53 52 51 50 48 47 44 43 41<br>40 37 35 34 32 30 29 27 26 22 21<br>20 19 18 17 16 13 12 8 7 6 5 4 3 2 1 |
| SALEABLE | NOT APPLICABLE | 34566-2693 | 0 | B | ST GRY | 71 70 68 66 65 60 59 58 57 54 53<br>51 50 49 48 46 45 43 42 41 40 39 38 37 36 35 33<br>73 32 31 30 24 23 22 20<br>16 15 13 12 11 10 9 8 7 6 5 4 |
| SALEABLE | NOT APPLICABLE | 34566-2713 | 0 | A | BLACK | 69 68 65 64 63 61 60 59 58 56<br>52 50 49 47 41 38 37 36 34 33<br>73 32 31 30 29 28 27 25 24 23 20 19 18 17<br>16 13 12 11 10 9 1 |
| SALEABLE | NOT APPLICABLE | 34566-2723 | 0 | B | ST GRY | 71 70 68 66 65 64 63 60 59 58 57 56 55 54 53<br>51 50 49 48 46 45 43 42 41 40 39 38 37 36 35 33<br>73 32 31 30 24 23 22 20 19<br>16 15 13 12 11 10 9 8 7 6 5 4 3 2 |
| SALEABLE | NOT APPLICABLE | 34566-2733 | 0 | A | BLACK | 70 68 67 66 65 58 57 55<br>49 47 44 43 42 41 39 37<br>73 32 30 27 25 24 23 21 20 19 18 17<br>16 15 13 10 9 8 6 5 3 2 1 |
| SALEABLE | NOT APPLICABLE | 34566-2743 | 0 | C | BLUE | 72 70 67 66 63 62 59 57 53<br>52 51 46 44 42 40 39 34 33<br>73 32 30 26 25 22 21 20<br>15 14 10 9 6 5 4 |
| SALEABLE | NOT APPLICABLE | 34566-2753 | 0 | A | BLACK | 63 62 61 58 57 56 55 54 53<br>52 51 49 44 43 42 41 37 36 35 34 33<br>73 32 29 28 27 26 19 18<br>16 15 13 12 11 10 3 |
| SALEABLE | NOT APPLICABLE | 34566-2763 | 0 | B | ST GRY | 72 71 70 68 67 66 62 61 60 59 58 57 56 55 54 53<br>52 51 50 48 47 46 42 41 40 39 38 37 36 35 34 33<br>73 32 31 30 29 28 27 26 25 24<br>16 15 14 13 10 9 8 |
| SALEABLE | NOT APPLICABLE | 34566-2773 | 0 | H | ST GRY | 61<br>53<br>32<br>20 9 5 1 |
| SALEABLE | NOT APPLICABLE | 34566-2783 | 9 | H | ST GRY | 61<br>53<br>32<br>20 9 5 1 |
| SALEABLE | NOT APPLICABLE | 34566-2793 | 9 | A | BLACK | 67 66<br>48 47 41<br>73 32 31 30 29 27 25 22 21 19 18 17<br>16 15 14 13 11 10 9 8 7 6 5 4 3 1 |

# MX123 52/66/73/80-WAY RECEPTACLE ASSY SEALED PIN OUT SHEET

| STATUS | GM PART # | HRNS CONN ASSY | | | TPA | GROMMET CAP |
|---|---|---|---|---|---|---|
| | | MATERIAL/PART NUMBER | WIRE DRESS OPTION | KEY OPTION Fp | COLOR OPTION Fp | NUMBERS INDICATE CAVITIES OPEN FOR CIRCUITS Fp |
| SALEABLE | NOT APPLICABLE | 34566-2813 | 9 | B | ST GRY | 72 71 70 69 68 67 66 65 64 62 61 60 59 58 57 56 55 54<br>52 51 50 49 48 46 44 40 37 36<br>73 32 31 30 29 28 27 25 24 21 20 18<br>16 14 13 12 11 10 9 7 6 4 3 2 |
| SALEABLE | NOT APPLICABLE | 34566-2823 | 0 | A | BLACK | 67 66<br>47 41<br>73 32 31 30 29 27 25 22 21 19 18 17<br>16 15 14 13 10 9 8 7 6 5 4 3 |
| SALEABLE | NOT APPLICABLE | 34566-2833 | 0 | B | ST GRY | 72 71 70 69 68 67 66 65 61 60 57 56 55 54<br>52 51 50 49 48 46 44 40 37 36<br>73 32 31 30 29 28 27 24 21 20 19 18 17<br>16 14 13 12 11 10 9 7 6 4 2 |
| SALEABLE | NOT APPLICABLE | 34566-2843 | 0 | A | BLACK | 67 66<br>47 41<br>73 32 31 30 29 27 25 22 21 19 18 17<br>16 15 14 13 10 9 8 7 6 5 4 3 1 |
| SALEABLE | NOT APPLICABLE | 34566-2853 | 0 | B | ST GRY | 72 71 70 69 68 67 66 65 64 63 61 60 57 56 55 54<br>52 51 50 49 48 46 44 40 37 36<br>73 32 31 30 29 28 27 24 21 20 19 18<br>16 14 13 12 11 10 9 7 6 4 3 2 |
| SALEABLE | NOT APPLICABLE | 34566-2863 | 0 | A | BLACK | 72 71 70 69 68 67 66 64 63 62 60 59 55 54 53<br>52 49 48 46 44 43 42 40 39 35 34 33<br>73 32 29 28 27 24 23 19 18 17<br>16 14 13 12 11 9 8 7 6 5 4 3 2 1 |
| SALEABLE | NOT APPLICABLE | 34566-2873 | 0 | B | ST GRY | 72 71 70 69 68 67 66 59 58 57 56 55 53<br>52 51 50 49 48 47 39 38 37 36 35 33<br>73 23 22 21<br>15 11 10 8 6 5 4 3 |
| SALEABLE | NOT APPLICABLE | 34566-2883 | 0 | A | BLACK | 70 69 63 62 61 58 57 56 55 54 53<br>52 51 49 44 43 42 41 37 36 34<br>73 32 29 28 27 26 19 18<br>16 13 12 11 10 3 |
| SALEABLE | NOT APPLICABLE | 34566-2893 | 0 | A | BLACK | 72 69 67 63 60 57 56 53<br>49 47 46 44 43 40 37 36 35 33<br>73 31 30 29 28 24 21 20 17<br>16 15 14 13 11 10 5 4 3 2 1 |
| SALEABLE | NOT APPLICABLE | 34566-2913 | 0 | B | ST GRY | 68 67 64 58<br>46 45 38<br>73 32 30 29 28 27 22 17<br>15 13 10 1 |
| SALEABLE | NOT APPLICABLE | 34566-2923 | 0 | B | ST GRY | 68 67 64<br>46 45<br>73 32 30 29 28 27 17<br>15 13 10 |
| SALEABLE | NOT APPLICABLE | 34566-2933 | 0 | A | BLACK | 72 69 67 63 60 57 56 53<br>49 47 44 43 40 37 36 35 33<br>73 31 30 29 28 24 21 20 17<br>16 15 14 11 10 5 4 3 2 1 |
| SALEABLE | NOT APPLICABLE | 34566-2943 | 0 | B | ST GRY | 68 67 64 63 59 57<br>46 45 43 39 37<br>73 32 30 29 28 27 21<br>10 6 5 4 3 |
| SALEABLE | NOT APPLICABLE | 34566-2953 | 0 | B | ST GRY | 68 67 64 63 59<br>46 45 43 39 34<br>73 32 30 29 28 27<br>10 6 5 4 3 |
| SALEABLE | NOT APPLICABLE | 34566-2963 | 0 | H | ST GRY | 79 74 73 72 71 69 68 67 64 62 61<br>59 54 53 52 49 48 47 42 41<br>38 33 29 27 25 21<br>15 14 11 10 9 8 7 |

# MX123 52/66/73/80-WAY RECEPTACLE ASSY SEALED PIN OUT SHEET

| STATUS | GM PART # | HRNS CONN ASSY | | | TPA | GROMMET CAP |
|---|---|---|---|---|---|---|
| | | MATERIAL/PART NUMBER | WIRE DRESS OPTION | KEY OPTION Fp | COLOR OPTION Fp | NUMBERS INDICATE CAVITIES OPEN FOR CIRCUITS Fp |
| SALEABLE | NOT APPLICABLE | 34566-2973 | 0 | G | BLUE | 80 78 77 75 74 73 72 70 69 67 65 64 63 62<br>60 58 57 55 54 52 51 50 49 47 45<br>40 38 37 33 32 31 27 26 25 24<br>20 18 17 10 9 8 6 5 3 2 1 |
| SALEABLE | NOT APPLICABLE | 34566-9913 | 0 | A | BLACK | 72 71 68 67 66 65 64 59<br>50 48 47 46 45 40 39 38<br>73 31 30 25 24 22 21 20 17<br>14 9 7 6 5 4 2 1 |
| SALEABLE | NOT APPLICABLE | 34566-9923 | 0 | A | BLACK | 72 71 67 66 62 61 60 57 55 54<br>51 48 46 45 44 43 42 39 35 33<br>73 26 25 24<br>15 14 8 7 6 5 4 3 2 |
| SALEABLE | NOT APPLICABLE | 34566-9933 | 0 | B | ST GRY | 69 65 64 63<br>49 45 44 43<br>73 22 21 20 19 18 17<br>12 11 6 5 4 3 2 1 |
| SALEABLE | NOT APPLICABLE | 34566-9943 | 0 | C | BLUE | 71 69 65 64 61 60 58 56 55 54<br>50 49 45 43 41 37 36 35<br>73 31 29 28 24 23 19 18 17<br>16 13 12 11 8 7 3 2 1 |
| SALEABLE | NOT APPLICABLE | 34566-9953 | 0 | A | BLACK | 67 62 60 57 55<br>51 48 46 45 44 43 39 35<br>73 25<br>15 14 7 6 5 4 3 2 |
| SALEABLE | NOT APPLICABLE | 34566-9963 | 0 | B | ST GRY | 68 67 64 63 58 55<br>46 45 43 38 35<br>73 32 30 29 28 27 22 19 17<br>15 13 10 1 |
| SALEABLE | NOT APPLICABLE | 34566-9973 | 0 | B | ST GRY | 68 67 64 63 58<br>46 45 43 38<br>73 32 30 29 28 27 22 17<br>15 13 10 |
| SALEABLE | NOT APPLICABLE | 34566-2983 | 9 | A | BLACK | 70 69 63 62 61 58 57 56 55 54 53<br>52 51 49 44 43 42 41 37 36 34<br>73 32 29 28 27 26 19 18 17<br>16 15 13 12 11 10 3 2 1 |
| SALEABLE | NOT APPLICABLE | 34566-2993 | 9 | B | ST GRY | 72 71 70 68 67 66 62 61 60 59 58 57 56 55 54 53<br>52 51 50 48 47 46 42 41 40 39 38 37 36 35 34 33<br>73 32 31 30 29 28 27 26 25 24<br>16 15 14 13 10 9 8 |
| SALEABLE | NOT APPLICABLE | 34566-3013 | 9 | C | BLUE | 72 71 70 69 68 67 66 63 62 59 57 56 55 53<br>52 51 46 44 42 40 39 38 34 33<br>73 32 30 26 25 22 21 19 18<br>15 14 10 9 6 5 4 3 |
| SALEABLE | NOT APPLICABLE | 34566-3023 | 0 | G | BLUE | 79 76 71 68 66 61<br>59 56 53 48 46 44 43 42 41<br>39 36 35 34 30 29 28 23 22 21<br>19 16 15 14 13 12 11 7 4 |
| SALEABLE | NOT APPLICABLE | 34566-3033 | 0 | H | ST GRY | 80 78 77 76 75 70 66 65 63<br>60 58 57 56 55 51 50 46 45 44 43<br>40 39 37 36 35 34 32 31 30 28 26 24 23 22<br>20 19 18 17 16 13 12 6 5 4 3 2 1 |
| SALEABLE | NOT APPLICABLE | 34566-3043 | 0 | C | BLUE | 72 70 68 66 63 62 59 57 53<br>52 51 48 47 46 44 42 40 39 34 33<br>73 32 30 27 26 25 22 21 20<br>15 14 13 10 9 6 5 4 |
| SALEABLE | NOT APPLICABLE | 34566-3053 | 0 | C | BLUE | 72 70 68 66 63 62 59 57 53<br>52 51 48 47 46 44 42 40 39 38 34 33<br>73 32 30 27 26 25 22 21 20<br>15 14 13 10 9 6 5 4 |

# MX123 52/66/73/80-WAY RECEPTACLE ASSY SEALED PIN OUT SHEET

| STATUS | GM PART # | HRNS CONN ASSY | | | TPA | GROMMET CAP |
|---|---|---|---|---|---|---|
| | | MATERIAL/PART NUMBER | WIRE DRESS OPTION | KEY OPTION Fp | COLOR OPTION Fp | NUMBERS INDICATE CAVITIES OPEN FOR CIRCUITS Fp |
| SALEABLE | NOT APPLICABLE | 34566-3063 | 0 | A | BLACK | 71 69 65 64 63 60 58 57 56 55 54 53<br>52 51 49 45 44 43 42 41 37 36 35 34 33<br>73 32 30 28 26 19 18<br>16 12 10 3 |
| SALEABLE | NOT APPLICABLE | 34566-3073 | 0 | A | BLACK | 71 69 65 64 63 60 57 56 55 54 53<br>52 51 49 45 44 43 42 41 37 36 35 34 33<br>73 32 30 28 26 23 19 18<br>16 12 10 8 7 6 3 |
| SALEABLE | NOT APPLICABLE | 34566-3083 | 0 | A | BLACK | 71 69 65 64 63 60 58 57 56 55 54 53<br>52 51 49 45 44 43 42 41 37 36 35 34 33<br>73 32 30 28 26 19 18<br>16 11 10 3 |
| SALEABLE | NOT APPLICABLE | 34566-3093 | 0 | A | BLACK | 71 69 64 63 62 60 57 56 55 54 53<br>52 51 49 45 44 43 42 41 37 36 35 34 33<br>73 32 30 28 26 23 19 18<br>16 12 10 3 |
| SALEABLE | NOT APPLICABLE | 34566-3113 | 0 | A | BLACK | 71 69 65 64 63 60 57 56 55 54 53<br>52 51 49 45 44 43 42 41 37 36 35 34 33<br>73 32 30 28 26 23 21 19 18<br>16 12 10 8 5 3 |
| SALEABLE | NOT APPLICABLE | 34566-3123 | 0 | B | ST GRY | 72 70 68 66 60 59 55 54 53<br>52 50 48 46 40 39 35 34 33<br>73 32 31 30 29 28 27 26 25 24<br>16 10 9 8 |
| SALEABLE | NOT APPLICABLE | 34566-3133 | 0 | C | BLUE | 72 70 68 67 66 63 62 59 57 53<br>52 51 48 47 46 44 42 40 39 34 33<br>73 32 30 26 25 22 21 20<br>15 14 10 9 6 5 4 |
| SALEABLE | NOT APPLICABLE | 34566-3143 | 0 | C | BLUE | 72 70 66 63 62 59 57 53<br>52 51 46 44 42 40 39 37 36 34 33<br>73 32 30 26 25 22 21<br>15 14 10 9 6 |
| SALEABLE | NOT APPLICABLE | 34566-3153 | 0 | A | BLACK | 70 69 63 58 56 54<br>52 51 49 47 44 43 42 41 36 34<br>73 32 28 26 19 18<br>16 12 10 3 |
| SALEABLE | NOT APPLICABLE | 34566-3163 | 0 | C | BLUE | 72 70 66 63 62 59 57 56 55 53<br>52 51 46 44 42 40 39 37 36 34 33<br>73 32 30 26 25 22 21 19 18<br>15 14 10 9 6 3 |
| SALEABLE | NOT APPLICABLE | 34566-3173 | 0 | A | BLACK | 70 69 63 58 56 54<br>52 51 49 47 44 43 42 41 36 34<br>73 32 28 26 19 18 17<br>16 12 10 3 2 1 |
| SALEABLE | NOT APPLICABLE | 34566-3183 | 0 | C | BLUE | 72 70 66 63 62 59 57 56 55 53<br>52 51 46 44 42 40 39 34 33<br>73 30 26 25 22 21<br>15 14 10 9 6 |
| SALEABLE | NOT APPLICABLE | 34566-3193 | 0 | A | BLACK | 69 63 58 56 55 54 53<br>52 51 49 44 43 42 41 36 35 34 33<br>73 32 28 26 19 18 17<br>16 12 10 3 2 1 |
| SALEABLE | NOT APPLICABLE | 34566-3213 | 0 | C | BLUE | 72 70 67 66 63 62 59 56 53<br>52 51 46 44 42 40 34 33<br>73 32 30 26 25 22 21<br>15 14 10 9 6 5 4 |
| SALEABLE | NOT APPLICABLE | 34566-3223 | 0 | C | BLUE | 72 70 67 66 63 62 59 57 53<br>52 51 46 44 42 40 39 34 33<br>73 32 30 27 26 25 22 21<br>15 14 10 9 6 5 4 |

# MX123 52/66/73/80-WAY RECEPTACLE ASSY SEALED PIN OUT SHEET

| STATUS | GM PART # | HRNS CONN ASSY | | | TPA | GROMMET CAP | | | | | | | | | | | | | | | | | | |
|---|---|---|---|---|---|---|---|---|---|---|---|---|---|---|---|---|---|---|---|---|---|---|---|---|
| | | MATERIAL/PART NUMBER | WIRE DRESS OPTION | KEY OPTION Fp | COLOR OPTION Fp | NUMBERS INDICATE CAVITIES OPEN FOR CIRCUITS Fp | | | | | | | | | | | | | | | | | | |
| SALEABLE | NOT APPLICABLE | 34566-3233 | 0 | A | BLACK | | | 70 | 69 | | | | | | 63 | 62 | 61 | | | 58 | 57 | 56 | 55 | 54 | 53 |
| | | | | | | 52 | 51 | | 49 | | | | | 44 | 43 | 42 | 41 | | | | 37 | 36 | | 34 | |
| | | | | | | 73 | | | | 32 | | | 29 | 28 | 27 | 26 | | | | | | | 19 | 18 | |
| | | | | | | | | | | 16 | 15 | | 13 | 12 | 11 | 10 | | | | | | | 3 | | |
| SALEABLE | NOT APPLICABLE | 34566-3243 | 0 | C | BLUE | 72 | | 70 | | | | 66 | | | 63 | 62 | | | 59 | | 57 | | | | 53 |
| | | | | | | 52 | 51 | | | | | 46 | | 44 | | 42 | | 40 | 39 | | | | | 34 | 33 |
| | | | | | | 73 | | | | 32 | | 30 | | | | 26 | 25 | | | 22 | 21 | | | | |
| | | | | | | | | | | | 15 | 14 | | | | 10 | 9 | | | 6 | 5 | 4 | | | |
| SALEABLE | NOT APPLICABLE | 34566-3253 | 0 | A | BLACK | | | 70 | 69 | | | | | | 63 | | | | | 58 | | 56 | 55 | 54 | 53 |
| | | | | | | 52 | 51 | | 49 | | | | | 44 | 43 | 42 | 41 | | | | | 36 | | 34 | |
| | | | | | | 73 | | | | 32 | | | | 28 | | 26 | | | | | | | 19 | 18 | |
| | | | | | | | | | | 16 | 15 | | | 12 | | 10 | | | | | | | 3 | | |
| SALEABLE | NOT APPLICABLE | 34566-3263 | 0 | C | BLUE | 72 | | 70 | | | | 66 | | | 63 | 62 | | | 59 | | 57 | 56 | 55 | | 53 |
| | | | | | | 52 | 51 | | | | | 46 | | 44 | | 42 | | 40 | 39 | | | | | 34 | 33 |
| | | | | | | 73 | | | | 32 | | 30 | | | | 26 | 25 | | | 22 | 21 | | 19 | 18 | |
| | | | | | | | | | | | 15 | 14 | | | | 10 | 9 | | | 6 | 5 | 4 | 3 | | |
| SALEABLE | NOT APPLICABLE | 34566-3273 | 0 | A | BLACK | | | 70 | 69 | | | | | | 63 | | | | | 58 | | 56 | 55 | 54 | 53 |
| | | | | | | 52 | 51 | | 49 | | | | | 44 | 43 | 42 | 41 | | | | | 36 | | 34 | |
| | | | | | | 73 | | | | 32 | | | | 28 | | 26 | | | | | | | 19 | 18 | 17 |
| | | | | | | | | | | 16 | 15 | | | 12 | | 10 | | | | | | | 3 | 2 | 1 |
| SALEABLE | NOT APPLICABLE | 34566-3283 | 0 | C | BLUE | 72 | | 70 | | | 67 | 66 | | | 63 | 62 | | | 59 | | 57 | | | | 53 |
| | | | | | | 52 | 51 | | | | | 46 | | 44 | | 42 | | 40 | 39 | | | | | 34 | 33 |
| | | | | | | 73 | | | | | | 30 | | | | 26 | 25 | | | 22 | 21 | | | | |
| | | | | | | | | | | | 15 | 14 | | | | 10 | 9 | | | 6 | 5 | 4 | | | |
| SALEABLE | NOT APPLICABLE | 34566-3293 | 0 | B | ST GRY | 72 | 71 | 70 | | 68 | 67 | 66 | | | | 62 | 61 | 60 | 59 | 58 | 57 | 56 | 55 | 54 | 53 |
| | | | | | | 52 | 51 | 50 | | 48 | 47 | | | | | 42 | 41 | 40 | 39 | 38 | 37 | 36 | 35 | 34 | 33 |
| | | | | | | 73 | | | | 32 | 31 | 30 | 29 | 28 | 27 | 26 | 25 | 24 | 23 | | | | | | |
| | | | | | | | | | | 16 | 15 | 14 | 13 | | | 10 | 9 | 8 | | | | | | | |
| SALEABLE | NOT APPLICABLE | 34566-3313 | 0 | C | BLUE | 72 | | 70 | | | | | | | 63 | 62 | | | 59 | | 57 | | | | 53 |
| | | | | | | 52 | 51 | | | | | 46 | | 44 | | 42 | | 40 | 39 | | | | | 34 | 33 |
| | | | | | | 73 | | | | 32 | | 30 | | | | 26 | 25 | | | 22 | 21 | | | | |
| | | | | | | | | | | | 15 | 14 | | | | | | | | 6 | 5 | 4 | | | |
| SALEABLE | NOT APPLICABLE | 34566-3323 | 0 | B | ST GRY | | | | | 68 | 67 | 66 | 65 | 64 | 63 | | | | | 58 | | | 55 | | |
| | | | | | | | | | 49 | 48 | | 46 | 45 | 44 | 43 | | | | | 38 | | | | | |
| | | | | | | 73 | | | | 32 | | 30 | 29 | 28 | 27 | | | | | 22 | | | | | 17 |
| | | | | | | | | | | 16 | | | | | | 10 | | | | | | | | | |
| SALEABLE | NOT APPLICABLE | 34566-3333 | 0 | A | BLACK | 72 | 71 | 70 | 69 | 68 | | | 65 | 64 | 63 | | 61 | | 59 | 58 | 57 | 56 | | 54 | |
| | | | | | | 52 | 51 | 50 | 49 | | 47 | | | | | 42 | 41 | | | 38 | 37 | 36 | | 34 | 33 |
| | | | | | | 73 | | | | 32 | 31 | 30 | 29 | 28 | 27 | 26 | | 24 | 23 | | | 20 | 19 | 18 | 17 |
| | | | | | | | | | | 16 | | | 13 | 12 | 11 | 10 | 9 | | | | | | 3 | 2 | 1 |
| SALEABLE | NOT APPLICABLE | 34566-3343 | 0 | A | BLACK | 72 | | | 69 | | 67 | 66 | 65 | | 63 | | | 60 | | | 57 | 56 | | | 53 |
| | | | | | | | | | 49 | | 47 | | | 44 | 43 | 42 | | 40 | | | 37 | 36 | 35 | | 33 |
| | | | | | | 73 | | | | | 31 | 30 | 29 | 28 | | 26 | | 24 | | | 21 | 20 | | | 17 |
| | | | | | | | | | | 16 | 15 | 14 | 13 | | 11 | 10 | | | | | 5 | 4 | 3 | 2 | 1 |
| SALEABLE | NOT APPLICABLE | 34566-3353 | 0 | B | ST GRY | | | | | 68 | 67 | | | 64 | | | | | 59 | 58 | | | | 54 | |
| | | | | | | | | | | | | 46 | 45 | | | | | | 39 | 38 | | | | | |
| | | | | | | 73 | | | | 32 | | 30 | 29 | 28 | 27 | | | | 23 | 22 | | | | | 17 |
| | | | | | | | | | | | | | | 12 | | 10 | | 8 | | | | | | | 1 |
| SALEABLE | NOT APPLICABLE | 34566-3363 | 0 | A | BLACK | | 71 | | 69 | 68 | | | 65 | 64 | 63 | | 61 | | 59 | | 57 | 56 | | 54 | |
| | | | | | | 52 | | 50 | 49 | | 47 | | | | | 42 | 41 | 40 | 39 | 38 | 37 | 36 | | 34 | 33 |
| | | | | | | 73 | | | | 32 | 31 | 30 | 29 | 28 | 27 | 26 | | 24 | 23 | 22 | | 20 | 19 | 18 | |
| | | | | | | | | | | 16 | | | 13 | 12 | 11 | 10 | 9 | | | | | | | | 1 |
| SALEABLE | NOT APPLICABLE | 34566-3373 | 9 | C | BLUE | 72 | | 70 | | 68 | 67 | 66 | | | 63 | 62 | | | 59 | | 57 | 56 | 55 | | 53 |
| | | | | | | 52 | 51 | | | 48 | 47 | 46 | | 44 | | 42 | | 40 | 39 | 38 | | | | 34 | 33 |
| | | | | | | 73 | | | | 32 | | 30 | | | | 26 | 25 | | | 22 | 21 | | 19 | 18 | |
| | | | | | | | | | | | 15 | 14 | | | | 10 | 9 | | | 6 | 5 | 4 | 3 | | |
| SALEABLE | NOT APPLICABLE | 34566-3383 | 0 | A | BLACK | | | 70 | 69 | 68 | | | 65 | 64 | 63 | | 61 | | 59 | 58 | 57 | 56 | | 54 | |
| | | | | | | 52 | | 50 | 49 | 48 | 47 | | | | | 42 | 41 | | | 38 | 37 | 36 | | 34 | 33 |
| | | | | | | 73 | | | | 32 | 31 | 30 | 29 | 28 | 27 | 26 | | 24 | 23 | | | 20 | 19 | 18 | |
| | | | | | | | | | | 16 | | | 13 | 12 | 11 | 10 | 9 | | | | | | | | 1 |

# MX123 52/66/73/80-WAY RECEPTACLE ASSY SEALED PIN OUT SHEET

| STATUS | GM PART # | HRNS CONN ASSY | | | TPA | GROMMET CAP |
|---|---|---|---|---|---|---|
| | | MATERIAL/PART NUMBER | WIRE DRESS OPTION | KEY OPTION Fp | COLOR OPTION Fp | NUMBERS INDICATE CAVITIES OPEN FOR CIRCUITS Fp |
| SALEABLE | NOT APPLICABLE | 34566-3393 | 0 | C | BLUE | 72 70 68 67 66 63 62 59 57 53<br>52 51 48 47 46 44 42 40 39 34 33<br>73 32 30 26 25 22 21<br>15 14 10 9 6 5 4 |
| SALEABLE | NOT APPLICABLE | 34566-3413 | 0 | A | BLACK | 72 70 67 66 65 61 58 57 55 54<br>50 49 47 45 44 43 42 41 39 37 35<br>73 32 30 27 26 25 24 21 20 19 18 17<br>16 15 13 11 10 9 8 6 5 3 2 1 |
| SALEABLE | NOT APPLICABLE | 34566-3423 | 9 | C | BLUE | 69 63 58 56 55 54 53<br>52 51 49 44 43 42 41 36 35 34 33<br>73 32 28 26 19 18 17<br>16 12 10 3 2 1 |
| SALEABLE | NOT APPLICABLE | 34566-3433 | 9 | C | BLUE | 72 70 66 63 62 59 57 56 55 53<br>52 51 46 44 42 40 39 34 33<br>73 30 26 25 22 21<br>15 14 10 9 6 |
| SALEABLE | NOT APPLICABLE | 34566-3443 | 0 | A | BLACK | 71 69 65 64 63 60 57 56 55 54 53<br>52 51 49 45 44 43 42 41 37 36 35 34 33<br>73 32 30 28 26 23 19 18<br>16 12 10 3 |
| SALEABLE | NOT APPLICABLE | 34566-3453 | 0 | A | BLACK | 61<br>73 20 5 1 |
| SALEABLE | NOT APPLICABLE | 34566-3463 | 9 | H | ST GRY | 61<br>20 9 5 1 |
| SALEABLE | NOT APPLICABLE | 34566-3473 | 9 | B | ST GRY | 72 71 70 69 68 67 66 65 64 62 61 60 59 58 57 56 55 54<br>52 51 50 49 46 44 40 38 37 36<br>73 32 31 30 29 28 27 25 24 21 20 18 17<br>16 15 14 13 12 10 9 7 6 5 4 3 2 |
| SALEABLE | NOT APPLICABLE | 34566-3483 | 0 | B | ST GRY | 72 71 70 69 68 67 66 65 61 60 57 56 55 54<br>52 51 50 49 48 46 44 40 38 37 36<br>73 32 31 30 29 28 27 24 21 20 19 18 17<br>16 15 14 13 12 11 10 9 7 6 5 4 2 |
| SALEABLE | NOT APPLICABLE | 34566-3493 | 0 | A | BLACK | 72 70 61 58 57 55 54<br>49 47 45 44 43 42 41 39 37 35<br>73 32 30 27 26 25 24 21 20 19 18 17<br>16 15 13 11 10 9 8 6 5 4 3 2 |
| SALEABLE | NOT APPLICABLE | 34566-3513 | 0 | A | BLACK | 70 69 63 62 61 60 58 57 56 55 54 53<br>52 51 49 44 43 42 41 37 36 34<br>73 32 29 28 27 26 19 18<br>16 15 13 12 11 10 3 |
| SALEABLE | NOT APPLICABLE | 34566-3523 | 0 | A | BLACK | 72 70 66 63 62 56 55 54<br>52 49 43 42 36 35 34<br>73 31 28 26 21 20 19 18<br>16 15 12 10 9 5 2 1 |
| SALEABLE | NOT APPLICABLE | 34566-3533 | 9 | A | BLACK | 69 63 58 56 55 54 53<br>52 51 49 44 43 42 41 36 35 34 33<br>73 32 28 26 19 18 17<br>16 12 10 3 2 1 |
| SALEABLE | NOT APPLICABLE | 34566-3543 | 9 | A | BLACK | 72 70 66 63 62 59 57 56 55 53<br>52 51 46 44 42 40 39 34 33<br>73 30 26 25 22 21<br>15 14 10 9 6 |
| SALEABLE | NOT APPLICABLE | 34566-3553 | 9 | C | BLUE | 72 71 70 69 68 67 66 65 63 62 61 59 58 57 56 55 54 53<br>51 50 49 48 46 45 44 43 42 41 40 39 38 36 35 34 33<br>73 31 30 29 28 27 26 25 22 20 19 18 17<br>16 15 14 11 10 9 7 6 5 3 2 1 |

molex

# MX123 52/66/73/80-WAY RECEPTACLE ASSY SEALED PIN OUT SHEET

| STATUS | GM PART # | HRNS CONN ASSY | | | TPA | GROMMET CAP |
|---|---|---|---|---|---|---|
| | | MATERIAL/PART NUMBER | WIRE DRESS OPTION | KEY OPTION Fp | COLOR OPTION Fp | NUMBERS INDICATE CAVITIES OPEN FOR CIRCUITS Fp |
| SALEABLE | NOT APPLICABLE | 34566-3563 | 9 | C | BLUE | 72 70 68 67 66 63 62 59 57 53<br>52 51 48 47 46 44 42 40 39 38 34 33<br>73 32 30 27 26 25 22 21<br>15 14 10 9 6 5 4 |
| SALEABLE | NOT APPLICABLE | 34566-3573 | 9 | C | BLUE | 70 69 68 63 62 61 58 57 56 55 54 53<br>52 51 50 49 48 47 44 43 42 41 37 36 34<br>73 32 29 28 27 26 19 18<br>16 15 14 13 12 11 10 3 |
| SALEABLE | NOT APPLICABLE | 34566-3583 | 9 | A | BLACK | 70 69 63 62 61 58 57 56 55 54 53<br>52 51 50 49 44 43 42 41 37 36 34<br>73 32 29 28 27 26 19 18<br>16 15 14 13 12 11 10 3 |
| SALEABLE | NOT APPLICABLE | 34566-3593 | 0 | A | BLACK | 71 69 64 63 60 58 57 56 55 54 53<br>52 51 49 45 44 43 42 41 37 36 35 34 33<br>73 32 30 28 26 19 18<br>16 15 12 10 3 |
| SALEABLE | NOT APPLICABLE | 34566-3613 | 0 | B | ST GRY | 68 67 64 63 59<br>46 45 43 39<br>73 32 30 29 28 27<br>10 6 5 4 3 |
| SALEABLE | NOT APPLICABLE | 34566-3623 | 0 | A | BLACK | 72 70 69 63 62 61 60 59 58 57 56 55 54 53<br>52 51 49 44 43 42 41 37 36 34<br>73 32 29 28 27 26 19 18<br>16 15 13 12 11 10 8 3 |
| SALEABLE | NOT APPLICABLE | 34566-3633 | 0 | C | BLUE | 72 70 68 67 66 63 62 59 57 53<br>52 51 48 47 46 44 40 39 38 37 36 34 33<br>73 32 30 26 25 24 23 22 21<br>15 14 10 9 8 7 6 5 4 2 |
| SALEABLE | NOT APPLICABLE | 34566-3643 | 0 | B | ST GRY | 72 71 70 68 67 66 64 63 59 53<br>52 51 50 48 47 46 39 34 33<br>73 32 31 30 29 28 27 26 25 24 17<br>16 15 14 13 10 8 2 1 |
| SALEABLE | NOT APPLICABLE | 34566-3653 | 0 | B | ST GRY | 72 71 70 69 68 66 65 64 63 59 53<br>52 51 50 49 48 47 46 45 44 43 39 34 33<br>73 32 30 29 28 27 26 25 24 17<br>16 14 13 12 11 10 8 3 2 1 |
| SALEABLE | NOT APPLICABLE | 34566-3663 | 0 | A | BLACK | 72 70 69 63 62 61 60 59 58 57 56 55 54 53<br>52 51 49 44 43 42 41 37 36 34<br>73 32 29 28 27 26 19 18<br>16 15 13 12 11 10 7 6 3 |
| SALEABLE | NOT APPLICABLE | 34566-3673 | 9 | C | BLUE | 71 70 69 68 67 63 62 61 59 58 57 56 55 54 53<br>51 50 49 48 45 44 43 42 41 40 39 38 36 35 34 33<br>73 31 30 29 28 27 26 22 20 19 18 17<br>16 15 14 9 7 6 5 3 2 1 |
| SALEABLE | NOT APPLICABLE | 34566-3683 | 9 | H | ST GRY | 61<br>32<br>20 15 9 5 1 |
| SALEABLE | NOT APPLICABLE | 34566-3693 | 0 | C | BLUE | 72 70 68 67 66 63 62 59 57 53<br>52 51 48 47 46 44 42 40 39 38 34 33<br>73 32 30 27 26 25 22 21<br>15 14 10 9 6 5 4 |
| SALEABLE | NOT APPLICABLE | 34566-3713 | 0 | C | BLUE | 72 70 68 67 66 63 62 59 57 53<br>52 51 48 47 46 44 42 40 39 34 33<br>73 32 30 27 26 25 22 21<br>15 14 10 9 6 5 4 |
| SALEABLE | NOT APPLICABLE | 34566-3723 | 0 | A | BLACK | 70 69 63 62 61 58 57 56 55 54 53<br>52 51 50 49 44 43 42 41 37 36 34<br>73 32 29 28 27 26 19 18<br>16 15 14 13 12 11 10 3 |

# MX123 52/66/73/80-WAY RECEPTACLE ASSY SEALED PIN OUT SHEET

| STATUS | GM PART # | HRNS CONN ASSY | | | TPA | GROMMET CAP | | | | | | | | | | | | | | | | | |
|---|---|---|---|---|---|---|---|---|---|---|---|---|---|---|---|---|---|---|---|---|---|---|---|
| | | MATERIAL/PART NUMBER | WIRE DRESS OPTION | KEY OPTION Fp | COLOR OPTION Fp | NUMBERS INDICATE CAVITIES OPEN FOR CIRCUITS Fp | | | | | | | | | | | | | | | | | |
| SALEABLE | NOT APPLICABLE | 34566-3733 | 0 | B | ST GRY | 72 | 71 | 70 | | 68 | 67 | 66 | | | | 62 | 61 | 60 | 59 | 58 | 57 | 56 | 55 | 54 | 53 |
| | | | | | | 52 | 51 | 50 | | 48 | 47 | 46 | | | | 42 | 41 | 40 | 39 | 38 | 37 | 36 | 35 | 34 | 33 |
| | | | | | | 73 | | | | 32 | 31 | 30 | 29 | 28 | 27 | 26 | 25 | 24 | 23 | | | | | | |
| | | | | | | | | | | 16 | 15 | 14 | 13 | | | 10 | 9 | 8 | | | | | | | |
| SALEABLE | NOT APPLICABLE | 34566-3743 | 0 | C | BLUE | 72 | | 70 | | 68 | | 66 | | | 63 | 62 | | | 59 | | 57 | | | | 53 |
| | | | | | | 52 | 51 | | | 48 | 47 | 46 | | 44 | | 42 | | 40 | 39 | 38 | | | | 34 | 33 |
| | | | | | | 73 | | | | 32 | | 30 | | | 27 | 26 | 25 | | | 22 | 21 | | | | |
| | | | | | | | | | | | 15 | 14 | | | | 10 | 9 | | | 6 | 5 | 4 | | | |
| SALEABLE | NOT APPLICABLE | 34566-3753 | 0 | C | BLUE | 72 | | 70 | | 68 | | 66 | | | 63 | 62 | | | 59 | | 57 | | | | 53 |
| | | | | | | 52 | 51 | | | 48 | 47 | 46 | | 44 | | 42 | | 40 | 39 | | | | | 34 | 33 |
| | | | | | | 73 | | | | 32 | | 30 | | | 27 | 26 | 25 | | | 22 | 21 | | | | |
| | | | | | | | | | | | 15 | 14 | | | | 10 | 9 | | | 6 | 5 | 4 | | | |
| SALEABLE | NOT APPLICABLE | 34566-3763 | 0 | C | BLUE | 72 | | 70 | | 68 | | 66 | | | 63 | 62 | | | 59 | | 57 | 56 | 55 | | 53 |
| | | | | | | 52 | 51 | | | 48 | 47 | 46 | | 44 | | 42 | | 40 | 39 | | | | | 34 | 33 |
| | | | | | | 73 | | | | 32 | | 30 | | | 27 | 26 | 25 | | | 22 | 21 | | | | |
| | | | | | | | | | | | 15 | 14 | | | | 10 | 9 | | | 6 | 5 | 4 | | | |
| SALEABLE | NOT APPLICABLE | 34566-3773 | 0 | A | BLACK | | | 70 | 69 | | | | | | 63 | | | | | 58 | | 56 | 55 | 54 | 53 |
| | | | | | | 52 | 51 | 50 | 49 | | | | | 44 | 43 | 42 | 41 | | 39 | | | 36 | | 34 | |
| | | | | | | 73 | | | | 32 | | | | 28 | | 26 | | | | | | | 19 | 18 | |
| | | | | | | | | | | 16 | 15 | 14 | | 12 | | 10 | | | | | | | 3 | | |
| SALEABLE | NOT APPLICABLE | 34566-3783 | 0 | A | BLACK | | | 70 | 69 | | | | | | 63 | | | | | 58 | | 56 | 55 | 54 | 53 |
| | | | | | | 52 | 51 | 50 | 49 | | | | | 44 | 43 | 42 | 41 | | 39 | | | 36 | | 34 | |
| | | | | | | 73 | | | | 32 | | | | 28 | | 26 | | | | | | | 19 | 18 | 17 |
| | | | | | | | | | | 16 | 15 | 14 | | 12 | | 10 | | | | | | | 3 | 2 | 1 |
| SALEABLE | NOT APPLICABLE | 34566-3793 | 0 | A | BLACK | | 71 | 70 | | | | | | 64 | 63 | | | 60 | | 58 | 57 | 56 | 55 | 54 | 53 |
| | | | | | | 52 | 51 | | 49 | | | | 45 | 44 | 43 | 42 | 41 | | | | 37 | 36 | | 34 | |
| | | | | | | 73 | | | | 32 | | 30 | | 28 | | 26 | | | 23 | | 21 | | 19 | 18 | |
| | | | | | | | | | | 16 | 15 | | | 12 | | 10 | | 8 | | | 5 | | 3 | | |
| SALEABLE | NOT APPLICABLE | 34566-3813 | 0 | C | BLUE | 72 | | 70 | | 68 | | 66 | | | 63 | 62 | | | 59 | | 57 | | | | 53 |
| | | | | | | 52 | 51 | | | 48 | 47 | 46 | | 44 | | 42 | | 40 | 39 | 38 | 37 | 36 | | 34 | 33 |
| | | | | | | 73 | | | | 32 | | 30 | | | | 26 | 25 | 24 | | 22 | 21 | 20 | | | |
| | | | | | | | | | | | 15 | 14 | 13 | | | 10 | 9 | 8 | | 6 | 5 | 4 | | 2 | |
| SALEABLE | NOT APPLICABLE | 34566-3823 | 0 | A | BLACK | | | 70 | 69 | | | | | | 63 | | 61 | | | 58 | 57 | 56 | 55 | 54 | 53 |
| | | | | | | 52 | 51 | | 49 | | | | | 44 | 43 | | 41 | | | | 37 | 36 | | 34 | |
| | | | | | | 73 | | | | 32 | | | | | 27 | 26 | | | | | | | 19 | 18 | |
| | | | | | | | | | | 16 | 15 | | | | 11 | 10 | | | | | | | 3 | | |
| SALEABLE | NOT APPLICABLE | 34566-3833 | 0 | A | BLACK | | | 70 | 69 | | | | | | 63 | 62 | 61 | | | | 57 | 56 | 55 | 54 | 53 |
| | | | | | | 52 | 51 | | 49 | | | | | 44 | 43 | 42 | 41 | | | | 37 | 36 | | 34 | |
| | | | | | | 73 | | | | 32 | | | 29 | 28 | 27 | 26 | | | 23 | | | | 19 | 18 | |
| | | | | | | | | | | 16 | 15 | | 13 | 12 | 11 | 10 | | 8 | | | | | 3 | | |
| SALEABLE | NOT APPLICABLE | 34566-3843 | 0 | A | BLACK | 72 | 71 | 70 | 69 | 68 | 67 | 66 | | 64 | 63 | 62 | | 60 | 59 | | | | 55 | 54 | 53 |
| | | | | | | 52 | | | 49 | 48 | | | | 44 | 43 | 42 | 41 | 40 | 39 | | | | 35 | 34 | 33 |
| | | | | | | 73 | | | | 32 | | | 29 | 28 | 27 | | 25 | 24 | 23 | | | | 19 | 18 | 17 |
| | | | | | | | | | | 16 | | | 13 | 12 | 11 | | 9 | 8 | 7 | 6 | 5 | 4 | 3 | 2 | 1 |
| SALEABLE | NOT APPLICABLE | 34566-3853 | 0 | A | BLACK | 72 | 71 | 70 | 69 | 68 | 67 | 66 | 65 | 64 | 63 | 62 | | 60 | 59 | | | | 55 | 54 | 53 |
| | | | | | | 52 | | | 49 | 48 | | | 45 | 44 | 43 | 42 | 41 | 40 | 39 | | | | 35 | 34 | 33 |
| | | | | | | 73 | | | | 32 | | | 29 | 28 | 27 | | 25 | 24 | 23 | | | | 19 | 18 | 17 |
| | | | | | | | | | | 16 | | | 13 | 12 | 11 | | 9 | 8 | 7 | 6 | 5 | 4 | 3 | 2 | 1 |
| SALEABLE | NOT APPLICABLE | 34566-3863 | 0 | B | ST GRY | 72 | 71 | 70 | | 68 | 67 | 66 | | | | 62 | 61 | 60 | 59 | 58 | 57 | 56 | 55 | 54 | 53 |
| | | | | | | 52 | 51 | 50 | | 48 | 47 | 46 | | | | 42 | 41 | 40 | 39 | 38 | 37 | 36 | 35 | 34 | 33 |
| | | | | | | 73 | | | | 32 | 31 | 30 | 29 | 28 | 27 | 26 | 25 | 24 | | | | | | | 17 |
| | | | | | | | | | | 16 | 15 | 14 | 13 | | | 10 | | 8 | | | | | | 2 | 1 |
| SALEABLE | NOT APPLICABLE | 34566-3873 | 0 | B | ST GRY | | | | | | | | | | 63 | | | | 59 | 58 | 57 | 56 | 55 | | |
| | | | | | | | | 50 | 49 | 48 | | 46 | 45 | | 43 | | | | 39 | 38 | 37 | 36 | 35 | 34 | |
| | | | | | | 73 | | | | | | | 29 | | 27 | | | | 23 | 22 | 21 | | | 18 | |
| | | | | | | | | | | 16 | 15 | 14 | 13 | | | | | | 7 | 6 | 5 | 4 | 3 | | |
| SALEABLE | NOT APPLICABLE | 34566-3883 | 0 | B | ST GRY | | | | | | 67 | 66 | | | | | | | 59 | 58 | 57 | 56 | 55 | | 53 |
| | | | | | | | | 50 | 49 | 48 | | | 45 | | | | | | 39 | 38 | 37 | 36 | 35 | 34 | 33 |
| | | | | | | 73 | | | | | | | 29 | | | | | | 23 | 22 | 21 | | | 18 | |
| | | | | | | | | | | 16 | 15 | 14 | 13 | | | | | 8 | 7 | 6 | 5 | 4 | 3 | | |

# MX123 52/66/73/80-WAY RECEPTACLE ASSY SEALED PIN OUT SHEET

| STATUS | GM PART # | HRNS CONN ASSY | | | TPA | GROMMET CAP |
|---|---|---|---|---|---|---|
| | | MATERIAL/PART NUMBER | WIRE DRESS OPTION | KEY OPTION Fp | COLOR OPTION Fp | NUMBERS INDICATE CAVITIES OPEN FOR CIRCUITS Fp |
| SALEABLE | NOT APPLICABLE | 34566-3893 | 0 | C | BLUE | 72 70 68 67 66 63 62 59 57 53<br>52 51 48 47 46 44 42 34 33<br>73 32 30 27 26 25 22 21<br>15 14 10 9 6 5 4 |
| SALEABLE | NOT APPLICABLE | 34566-3913 | 0 | A | BLACK | 71 70 69 64 63 60 58 57 56 55 54 53<br>52 51 49 45 44 43 42 41 37 36 34<br>73 32 30 28 26 23 21 19 18<br>16 15 12 10 8 5 3 |
| SALEABLE | NOT APPLICABLE | 34566-3923 | 0 | B | ST GRY | 72 70 68 66 60 59 55 54 53<br>52 50 48 46 40 39 35 34 33<br>73 32 31 30 29 28 27 26 25 24 23 19 18<br>16 10 9 8 7 |
| SALEABLE | NOT APPLICABLE | 34566-3933 | 0 | A | BLACK | 71 70 69 64 63 60 58 57 56 55 54 53<br>52 51 49 45 44 43 42 41 37 36 34<br>73 32 30 28 26 19 18<br>16 15 12 10 3 |
| SALEABLE | NOT APPLICABLE | 34566-3943 | 0 | C | BLUE | 72 70 68 66 60 59 55 54 53<br>52 50 48 46 40 39 35 34 33<br>73 32 31 30 29 28 27 26 25 24<br>16 10 9 8 |
| SALEABLE | NOT APPLICABLE | 34566-3953 | 0 | C | BLUE | 72 70 68 63 62 59 57 53<br>52 51 48 47 46 44 42 40 39 34 33<br>73 32 30 26 25 23 22 21 20<br>15 14 13 7 6 5 4 |
| SALEABLE | NOT APPLICABLE | 34566-3963 | 0 | C | BLUE | 72 70 68 67 66 63 62 59 57 53<br>52 51 48 47 46 44 42 40 39 38 34 33<br>73 32 30 26 25 22 21<br>15 14 10 9 6 5 4 |
| SALEABLE | NOT APPLICABLE | 34566-3973 | 0 | C | BLUE | 72 70 68 67 63 62 59 57 53<br>52 51 48 47 46 44 42 40 39 38 34 33<br>73 32 30 26 25 22 21<br>15 14 6 5 4 |
| SALEABLE | NOT APPLICABLE | 34566-3983 | 0 | A | BLACK | 72 71 70 69 64 63 60 59 58 57 56 55 54 53<br>52 51 49 45 44 43 42 41 40 37 36 34<br>73 32 30 28 26 19 18<br>16 15 12 10 3 |
| SALEABLE | NOT APPLICABLE | 34566-3993 | 0 | A | BLACK | 70 69 63 62 61 60 58 57 56 55 54 53<br>52 51 49 44 43 42 41 40 37 36 34<br>73 32 29 28 27 26 19 18<br>16 15 13 12 11 10 3 |
| SALEABLE | NOT APPLICABLE | 34566-4013 | 0 | B | ST GRY | 72 70 68 66 60 59 55 54 53<br>52 50 48 46 40 39 35 34 33<br>73 32 31 30 29 28 27 26 25 24 17<br>16 10 8 2 1 |
| SALEABLE | NOT APPLICABLE | 34566-4023 | 0 | B | ST GRY | 72 71 70 68 67 66 62 61 60 59 58 57 56 55 54 53<br>52 51 50 48 47 46 42 41 40 39 38 37 36 35 34 33<br>73 32 31 30 29 28 27 26 25 24<br>16 15 14 13 10 9 8 |
| SALEABLE | NOT APPLICABLE | 34566-4033 | 0 | C | BLUE | 72 70 68 63 62 59 58 57 53<br>52 51 48 47 44 42 40 39 38 34 33<br>73 32 30 26 25 22 21 20 17<br>15 14 13 6 5 4 1 |
| SALEABLE | NOT APPLICABLE | 34566-4043 | 0 | A | BLACK | 71 70 69 67 64 63 60 57 56 55 54 53<br>52 51 49 45 44 43 42 41 37 36 34<br>73 32 30 28 26 23 19 18<br>16 15 12 10 3 |
| SALEABLE | NOT APPLICABLE | 34566-4053 | 0 | A | BLACK | 72 69 67 66 65 63 60 57 56 53<br>49 47 46 44 43 42 40 37 36 35 33<br>73 31 30 29 28 27 26 24 21 20 17<br>16 15 14 13 11 10 5 4 3 2 1 |

# MX123 52/66/73/80-WAY RECEPTACLE ASSY SEALED PIN OUT SHEET

| STATUS | GM PART # | HRNS CONN ASSY | | | TPA | GROMMET CAP |
|---|---|---|---|---|---|---|
| | | MATERIAL/PART NUMBER | WIRE DRESS OPTION | KEY OPTION Fp | COLOR OPTION Fp | NUMBERS INDICATE CAVITIES OPEN FOR CIRCUITS Fp |
| SALEABLE | NOT APPLICABLE | 34566-4063 | 0 | B | ST GRY | 73: 68 67 64 59 58 54 / 46 45 39 38 / 32 30 29 28 27 23 22 17 / 15 13 10 8 1 |
| SALEABLE | NOT APPLICABLE | 34566-4073 | 0 | A | BLACK | 73: 72 70 66 63 59 57 56 55 53 / 52 51 46 44 42 40 39 37 36 34 33 / 32 30 26 25 22 21 19 18 / 15 14 10 9 6 3 |
| SALEABLE | NOT APPLICABLE | 34566-4083 | 0 | C | BLUE | 73: 72 70 68 63 62 59 58 57 53 / 52 51 48 47 44 42 40 39 38 37 36 34 33 / 32 30 27 26 25 24 22 21 20 17 / 15 14 13 8 6 5 4 2 1 |
| SALEABLE | NOT APPLICABLE | 34566-4093 | 0 | A | BLACK | 73: 71 70 69 67 64 63 60 57 56 55 54 53 / 52 51 49 47 45 44 43 42 41 37 36 34 / 32 30 28 26 23 19 18 / 16 15 12 10 3 |
| SALEABLE | NOT APPLICABLE | 34566-4113 | 0 | B | ST GRY | 73: 68 67 64 58 / 46 45 38 / 32 30 29 28 27 22 17 / 15 13 10 1 |
| SALEABLE | NOT APPLICABLE | 34566-4123 | 9 | A | BLACK | 73: 72 69 67 66 65 63 60 57 56 53 / 49 47 46 44 43 42 40 37 36 35 33 / 31 30 29 28 26 24 21 20 17 / 16 15 14 13 11 10 5 4 3 2 1 |
| SALEABLE | NOT APPLICABLE | 34566-4133 | 9 | B | ST GRY | 73: 68 67 64 59 58 54 / 46 45 39 38 / 32 30 29 28 27 23 22 17 / 15 13 10 9 8 1 |
| SALEABLE | NOT APPLICABLE | 34566-4143 | 0 | B | ST GRY | 73: 68 67 64 59 58 54 / 46 45 39 38 / 32 30 29 28 27 23 22 17 / 10 9 1 |
| SALEABLE | NOT APPLICABLE | 34566-4153 | 0 | B | ST GRY | 73: 72 70 68 66 60 59 55 54 53 / 52 50 48 46 44 40 39 35 34 33 / 32 31 30 29 28 27 26 25 24 23 19 18 / 16 10 9 8 7 |
| SALEABLE | NOT APPLICABLE | 34566-4163 | 0 | B | ST GRY | 73: 72 70 68 66 60 59 55 54 53 / 52 50 48 46 40 39 35 34 33 / 32 31 30 29 28 27 26 25 24 17 / 16 10 8 7 2 1 |
| SALEABLE | NOT APPLICABLE | 34566-4173 | 0 | A | BLACK | 73: 72 71 70 69 64 63 60 59 58 56 55 54 53 / 52 51 49 47 45 44 43 42 41 38 36 34 / 32 30 28 26 25 21 19 18 / 16 15 12 10 9 8 5 3 |
| SALEABLE | NOT APPLICABLE | 34566-4183 | 0 | C | BLUE | 73: 72 70 68 66 63 62 59 58 57 53 / 52 51 48 47 46 44 42 40 39 34 33 / 32 30 26 25 23 22 21 20 17 / 15 14 13 10 9 7 6 5 4 1 |
| SALEABLE | NOT APPLICABLE | 34566-4193 | 0 | C | BLUE | 73: 71 69 65 64 61 60 58 56 55 54 / 50 49 45 43 41 38 37 36 35 / 31 29 28 24 23 20 19 18 17 / 16 13 12 11 8 7 3 2 1 |
| SALEABLE | NOT APPLICABLE | 34566-4213 | 0 | A | BLACK | 73: 72 71 68 67 66 65 64 60 59 58 / 50 48 47 46 45 40 39 38 35 / 31 30 25 24 22 21 20 17 / 14 9 7 6 5 4 2 1 |
| SALEABLE | NOT APPLICABLE | 34566-4223 | 0 | A | BLACK | 73: 72 71 68 67 66 65 64 60 59 / 50 48 47 46 45 40 39 38 35 33 / 31 30 25 24 23 22 21 20 17 / 14 9 8 7 6 5 4 2 1 |

# MX123 52/66/73/80-WAY RECEPTACLE ASSY SEALED PIN OUT SHEET

| STATUS | GM PART # | HRNS CONN ASSY | | | TPA | GROMMET CAP |
|---|---|---|---|---|---|---|
| | | MATERIAL/PART NUMBER | WIRE DRESS OPTION | KEY OPTION Fp | COLOR OPTION Fp | NUMBERS INDICATE CAVITIES OPEN FOR CIRCUITS Fp |
| SALEABLE | NOT APPLICABLE | 34566-4233 | 0 | B | ST GRY | 69 65 64 63<br>49 45 44 43<br>73 23 22 21 20 19 18<br>12 11 9 7 6 5 4 3 |
| SALEABLE | NOT APPLICABLE | 34566-4243 | 0 | A | BLACK | 61<br>51 50 47 46 58 57 56<br>73 31 30 26 38 37 36<br>15 14 10 22 21 20 |
| SALEABLE | NOT APPLICABLE | 34566-4253 | 0 | A | BLACK | 65 61 58 57 56<br>51 50 47 46 45 38 37 36<br>73 31 30 26 22 21 20<br>15 14 10 |
| SALEABLE | NOT APPLICABLE | 34566-4263 | 0 | B | ST GRY | 72 71 70 69 68 65 64 62 61 60 54<br>52 51 47 46 44 42 41 40<br>73 32 31 30 28 26 25 24 20 19 17<br>12 11 10 9 2 1 |
| SALEABLE | NOT APPLICABLE | 34566-4273 | 0 | B | ST GRY | 72 71 70 69 68 67 66 65 64 62 61 60 54<br>52 51 47 45 44 42 41 40<br>73 32 31 30 28 26 25 24 20 19 17<br>13 12 11 10 9 8 2 1 |
| SALEABLE | NOT APPLICABLE | 34566-4283 | 0 | A | BLACK | 70 69 63 62 61 60 57 56 55 54 53<br>52 51 49 44 43 42 41 37 36 34<br>73 32 29 28 27 26 23 19 18<br>16 15 13 12 11 10 8 3 |
| SALEABLE | NOT APPLICABLE | 34566-4293 | 0 | B | ST GRY | 67 66 63 59 58 57 56 55 53<br>50 49 48 45 43 39 38 37 36 35 34 33<br>73 29 27 23 22 21 18<br>16 15 14 13 8 7 6 5 4 3 |
| SALEABLE | NOT APPLICABLE | 34566-4313 | 0 | B | ST GRY | 63 59 58 57 56 55 53<br>50 49 48 46 43 39 38 37 36 35 34 33<br>73 29 27 23 22 21 18<br>16 15 14 13 7 6 5 4 3 |
| SALEABLE | NOT APPLICABLE | 34566-4323 | 0 | B | ST GRY | 72 70 68 66 60 59 55 54 53<br>52 50 48 46 40 39 35 34 33<br>73 32 31 30 29 28 27 26 25 24 19 18 17<br>16 10 8 7 2 1 |
| SALEABLE | NOT APPLICABLE | 34566-4333 | 0 | A | BLACK | 72 71 70 69 67 64 63 60 59 56 55 54 53<br>52 51 49 47 45 44 43 42 41 38 36 34<br>73 32 30 28 26 25 23 19 18<br>16 15 12 10 9 3 |
| SALEABLE | NOT APPLICABLE | 34566-4343 | 0 | A | BLACK | 72 71 70 69 64 63 60 59 58 56 55 54 53<br>52 51 49 47 45 44 43 42 41 38 36 34<br>73 32 30 28 26 25 19 18<br>16 15 12 10 9 3 |
| SALEABLE | NOT APPLICABLE | 34566-4353 | 0 | C | BLUE | 72 70 68 63 62 59 58 57 53<br>52 51 48 47 44 42 40 39 34 33<br>73 32 30 26 25 23 22 21 20 17<br>15 14 13 7 6 5 4 1 |
| SALEABLE | NOT APPLICABLE | 34566-4363 | 0 | A | BLACK | 70 69 63 62 61 60 58 57 56 55 54 53<br>52 51 49 44 43 42 41 37 36 34<br>73 32 29 28 27 26 23 19 18<br>16 15 13 12 11 10 8 3 |
| SALEABLE | NOT APPLICABLE | 34566-4373 | 0 | A | BLACK | 70 69 63 58 56 54<br>52 51 49 47 44 43 42 41 40 36 34<br>73 32 28 26 19 18 17<br>16 12 10 3 2 1 |
| SALEABLE | NOT APPLICABLE | 34566-4383 | 0 | H | ST GRY | 79 74 73 72 71 69 68 67 64 62 61<br>59 54 52 49 48 47 42 41<br>38 33 29 27 25<br>18 15 14 11 10 9 8 7 |

# MX123 52/66/73/80-WAY RECEPTACLE ASSY SEALED PIN OUT SHEET

| STATUS | GM PART # | HRNS CONN ASSY | | | TPA | GROMMET CAP |
|---|---|---|---|---|---|---|
| | | MATERIAL/PART NUMBER | WIRE DRESS OPTION | KEY OPTION Fp | COLOR OPTION Fp | NUMBERS INDICATE CAVITIES OPEN FOR CIRCUITS Fp |
| SALEABLE | NOT APPLICABLE | 34566-4393 | 0 | G | BLUE | 78 77 75 74 72 70 69 67 65 64 63 62<br>60 58 57 55 54 52 51 50 49 47 45<br>40 38 37 33 32 31 27 26 25 24<br>20 18 17 10 9 8 6 5 3 2 1 |
| SALEABLE | NOT APPLICABLE | 34566-4413 | 0 | B | ST GRY | 63 59 58 57 56 55 53<br>50 49 48 46 43 39 38 37 36 35 34 33<br>73 29 27 23 22 21 18<br>16 15 14 7 6 5 4 3 |
| SALEABLE | NOT APPLICABLE | 34566-4423 | 9 | C | BLUE | 72 70 68 67 66 63 62 59 57 53<br>52 51 48 47 46 44 42 40 39 38 37 36 34 33<br>73 32 30 27 26 25 24 22 21<br>15 14 10 9 8 6 5 4 2 |
| SALEABLE | NOT APPLICABLE | 34566-4433 | 9 | A | BLACK | 70 69 63 62 61 60 58 57 56 55 54 53<br>52 51 50 49 44 43 42 41 40 37 36 34<br>73 32 29 28 27 26 19 18<br>16 15 14 13 12 11 10 3 |
| SALEABLE | NOT APPLICABLE | 34566-4443 | 9 | A | BLACK | 67 66<br>48 47 41<br>73 32 31 30 29 27 26 25 22 21 19 18 17<br>16 15 14 13 11 10 9 8 7 6 5 4 3 1 |
| SALEABLE | NOT APPLICABLE | 34566-4453 | 0 | A | BLACK | 72 71 70 69 68 65 64 63 62 61 60 59 58 57 56 55 54 53<br>52 51 50 49 48 46 45 44 43 42 40 39 38 37 36 35 34 33<br>73 28 24 23 20<br>12 11 2 1 |
| SALEABLE | NOT APPLICABLE | 34566-4463 | 9 | B | ST GRY | 63 53<br>48 47 45 43 42 39 35 34 33<br>73 26 23 22 19<br>11 1 |
| SALEABLE | NOT APPLICABLE | 34566-4473 | 0 | B | ST GRY | 64 63 62 59 58 53<br>47 45 43 42 39 35 34 33<br>73 26 25 23 22<br>3 1 |
| SALEABLE | NOT APPLICABLE | 34566-4483 | 9 | C | BLUE | 72 70 68 67 66 63 62 59 58 57 56 55 53<br>52 51 49 48 47 46 44 40 39 38 37 36 34 33<br>73 32 30 27 26 25 24 23 22 21 20 19 18 17<br>15 14 13 10 9 8 7 6 5 4 3 2 1 |
| SALEABLE | NOT APPLICABLE | 34566-4493 | 9 | A | BLACK | 72 71 70 69 67 64 63 62 61 60 59 58 57 56 55 54 53<br>52 51 50 49 48 47 45 44 43 42 41 40 39 37 36 34<br>73 32 30 29 28 27 26 24 23 21 19 18 17<br>16 15 14 13 12 11 10 8 5 3 2 1 |
| SALEABLE | NOT APPLICABLE | 34566-4513 | 9 | B | ST GRY | 72 71 70 68 67 66 63 62 61 60 59 58 57 56 55 54 53<br>52 51 50 48 47 46 42 41 40 39 38 37 36 35 34 33<br>73 32 31 30 29 28 27 26 25 24 23 19 18 17<br>16 15 14 13 10 8 7 3 2 1 |
| SALEABLE | NOT APPLICABLE | 34566-4523 | 0 | G | BLUE | 78 77 75 74 72 70 69 67 65 64 63 62<br>60 58 57 55 54 52 51 50 49 47 45<br>40 38 37 31 27 26 25 24<br>20 18 17 10 9 8 6 5 3 2 1 |
| SALEABLE | NOT APPLICABLE | 34566-4533 | 0 | A | BLACK | 72 69 67 65 63 60 57 56 53<br>49 47 44 43 40 37 36 35 33<br>73 31 30 29 28 24 21 20 17<br>16 15 14 13 11 10 5 4 3 2 1 |
| SALEABLE | NOT APPLICABLE | 34566-4543 | 0 | B | ST GRY | 68 67 64 63 58 57 55 53<br>46 45 43 38 37 35<br>73 32 30 29 28 27 22 21 19 17<br>12 10 1 |
| SALEABLE | NOT APPLICABLE | 34566-4553 | 0 | B | ST GRY | 68 67 64 63 58 57 53<br>46 45 43 38 37<br>73 32 30 29 28 27 22 21 17<br>12 10 |

# MX123 52/66/73/80-WAY RECEPTACLE ASSY SEALED PIN OUT SHEET

| STATUS | GM PART # | HRNS CONN ASSY | | | TPA | GROMMET CAP |
|---|---|---|---|---|---|---|
| | | MATERIAL/PART NUMBER | WIRE DRESS OPTION | KEY OPTION Fp | COLOR OPTION Fp | NUMBERS INDICATE CAVITIES OPEN FOR CIRCUITS Fp |
| SALEABLE | NOT APPLICABLE | 34566-4563 | 0 | B | ST GRY | 73: 68 67 64 63 58 55 53 / 46 45 43 38 35 / 32 30 29 28 27 22 19 17 / 12 10 1 |
| SALEABLE | NOT APPLICABLE | 34566-4573 | 0 | B | ST GRY | 73: 68 67 64 63 58 53 / 46 45 43 38 / 32 30 29 28 27 22 17 / 12 10 |
| SALEABLE | NOT APPLICABLE | 34566-4583 | 0 | B | ST GRY | 73: 68 67 64 58 53 / 46 45 38 / 32 30 29 28 27 22 17 / 12 10 1 |
| SALEABLE | NOT APPLICABLE | 34566-4593 | 0 | B | ST GRY | 73: 68 67 64 58 53 / 46 45 38 / 32 30 29 28 27 22 17 / 12 10 |
| SALEABLE | NOT APPLICABLE | 34566-4613 | 0 | A | BLACK | 73: 72 69 67 66 65 63 60 57 56 53 / 49 47 44 43 42 40 37 36 35 33 / 31 30 29 28 27 26 24 21 20 17 / 16 15 14 13 11 10 5 4 3 2 1 |
| SALEABLE | NOT APPLICABLE | 34566-4623 | 0 | B | ST GRY | 73: 72 70 68 66 60 59 55 54 53 / 52 50 48 46 40 39 35 34 33 / 32 31 30 29 28 27 26 25 24 23 17 / 16 10 8 7 2 1 |
| SALEABLE | NOT APPLICABLE | 34566-4633 | 0 | A | BLACK | 73: 71 70 69 64 63 60 59 58 56 55 54 53 / 52 51 49 47 45 44 43 42 41 38 36 34 / 32 30 28 26 21 19 18 / 16 15 12 10 8 5 3 |
| SALEABLE | NOT APPLICABLE | 34566-4643 | 0 | B | ST GRY | 73: 72 70 68 66 60 59 55 54 53 / 52 50 48 46 40 39 35 34 33 / 32 31 30 29 28 27 26 25 24 23 19 18 17 / 16 10 8 7 2 1 |
| SALEABLE | NOT APPLICABLE | 34566-4653 | 0 | A | BLACK | 73: 71 70 69 67 64 63 60 59 56 55 54 53 / 52 51 49 47 45 44 43 42 41 38 36 34 / 32 30 28 26 23 19 18 / 16 15 12 10 3 |
| SALEABLE | NOT APPLICABLE | 34566-4663 | 0 | A | BLACK | 73: 71 70 69 64 63 60 59 58 56 55 54 53 / 52 51 49 47 45 44 43 42 41 38 36 34 / 32 30 28 26 19 18 / 16 15 12 10 3 |
| SALEABLE | NOT APPLICABLE | 34566-4673 | 0 | A | BLACK | 73: 67 66 47 41 / 32 31 30 29 27 26 25 22 21 19 18 17 / 16 15 14 13 10 9 8 7 6 5 4 3 |
| SALEABLE | NOT APPLICABLE | 34566-4683 | 9 | B | ST GRY | 73: 72 71 70 69 68 67 66 65 64 62 61 60 59 58 57 56 55 54 / 52 51 50 49 46 44 41 40 38 37 36 / 32 31 30 29 28 27 25 24 21 20 18 17 / 16 15 14 13 12 10 9 8 7 6 5 4 3 2 |
| SALEABLE | NOT APPLICABLE | 34566-4693 | 0 | B | ST GRY | 73: 72 71 70 69 68 67 66 65 61 60 57 56 55 54 / 52 51 50 49 48 46 44 41 40 38 37 36 / 32 31 30 29 28 27 24 21 20 19 18 17 / 16 15 14 13 12 11 10 9 8 7 6 5 4 2 |
| SALEABLE | NOT APPLICABLE | 34566-4713 | 0 | A | BLACK | 73: 72 71 70 69 67 64 63 60 59 56 55 54 53 / 52 51 49 47 45 44 43 42 41 36 34 / 32 30 28 26 23 19 18 / 16 15 12 10 3 |
| SALEABLE | NOT APPLICABLE | 34566-4723 | 0 | A | BLACK | 73: 72 71 70 69 64 63 60 59 58 56 55 54 53 / 52 51 49 47 45 44 43 42 41 36 34 / 32 30 28 26 19 18 / 16 15 12 10 3 |

# MX123 52/66/73/80-WAY RECEPTACLE ASSY SEALED PIN OUT SHEET

| STATUS | GM PART # | HRNS CONN ASSY | | | TPA | GROMMET CAP |
|---|---|---|---|---|---|---|
| | | MATERIAL/PART NUMBER | WIRE DRESS OPTION | KEY OPTION Fp | COLOR OPTION Fp | NUMBERS INDICATE CAVITIES OPEN FOR CIRCUITS Fp |
| SALEABLE | NOT APPLICABLE | 34566-4733 | 0 | A | BLACK | 72 71 70 69 — — — — 64 63 — — 60 59 58 — 56 55 54 53<br>52 51 — 49 — 47 — 45 44 43 42 41 — — — — 36 — 34 —<br>73 — 32 — 30 — 28 — 26 — — — — 21 — 19 18 —<br>— 16 15 — — 12 — 10 — 8 — — 5 — 3 — — |
| SALEABLE | NOT APPLICABLE | 34566-4743 | 9 | A | BLACK | 72 71 70 69 — 67 — 65 64 63 62 61 60 59 58 57 56 55 54 53<br>52 51 50 49 48 47 — 45 44 43 42 41 40 39 — 37 36 — 34 —<br>73 — 32 — 30 29 28 27 26 — 24 23 — 21 — 19 18 17<br>— 16 15 14 13 12 11 10 — 8 — — 5 — 3 2 1 |
| SALEABLE | NOT APPLICABLE | 34566-4753 | 0 | B | ST GRY | — — — — 68 67 — — 64 — — — — — 58 — — — — —<br>— — — — — — 46 45 — — — — — — 38 — — — — —<br>73 — 32 — 30 29 28 27 — — — — — 22 — — — — 17<br>— — 15 — 13 — — 10 — — — — 6 — — — — 1 |
| SALEABLE | NOT APPLICABLE | 34566-4763 | 0 | B | ST GRY | — — — — 68 67 — — 64 — — — — — — — — — —<br>— — — — — — 46 45 — — — — — — — — — — —<br>73 — 32 — 30 29 28 27 — — — — — — — — — 17<br>— — 15 — 13 — — 10 — — — — 6 — — — — — |
| SALEABLE | NOT APPLICABLE | 34566-4773 | 0 | B | ST GRY | — — — — 68 67 — — 64 — — — 59 58 — — — 54 —<br>— — — — — — 46 45 — — — — 39 38 — — — — —<br>73 — 32 — 30 29 28 27 — — — 23 22 — — — — 17<br>— — 15 — 13 — — 10 — 8 — 6 — — — — 1 |
| SALEABLE | NOT APPLICABLE | 34566-4783 | 0 | B | ST GRY | — — — — 68 67 — — 64 63 — — — — 58 — — 55 — —<br>— — — — — — 46 45 — 43 — — — — 38 — — 35 — —<br>73 — 32 — 30 29 28 27 — — — — 22 — — 19 — 17<br>— — 15 — 13 — — 10 — — — — 6 — — — — 1 |
| SALEABLE | NOT APPLICABLE | 34566-4793 | 0 | B | ST GRY | — — — — 68 67 — — 64 63 — — — — 58 — — — — —<br>— — — — — — 46 45 — 43 — — — — 38 — — — — —<br>73 — 32 — 30 29 28 27 — — — — 22 — — — — 17<br>— — 15 — 13 — — 10 — — — — 6 — — — — — |
| SALEABLE | NOT APPLICABLE | 34566-4813 | 9 | B | ST GRY | — — — — 68 67 — — 64 — — — 59 58 — — — 54 —<br>— — — — — — 46 45 — — — — 39 38 — — — — —<br>73 — 32 — 30 29 28 27 — — — 23 22 — — — — 17<br>— — 15 — 13 — — 10 9 8 — 6 — — — — 1 |
| SALEABLE | NOT APPLICABLE | 34566-4823 | 0 | C | BLUE | — — — — 68 67 66 65 64 — — — 59 58 57 — 55 54 53<br>— 51 50 49 48 — 46 45 — 43 42 41 40 39 38 37 — 35 — 33<br>73 — 32 31 30 — — — 26 — 24 23 22 — 20 — — —<br>— 16 — — 13 — — 10 9 8 7 6 5 4 3 2 — |
| SALEABLE | NOT APPLICABLE | 34566-4833 | 0 | C | BLUE | 72 — 70 — 68 67 66 — — 63 62 — — 59 — 57 — — — 53<br>52 51 — — 48 47 46 — 44 — 42 — 40 39 — 37 36 — 34 33<br>73 — 32 — 30 — — 27 26 25 24 — 22 21 — — — — —<br>— — 15 14 — — — 10 9 8 — 6 5 4 — 2 — |
| SALEABLE | NOT APPLICABLE | 34566-4843 | 0 | C | BLUE | 72 — 70 — 68 67 66 — — 63 62 — — 59 — 57 — — — 53<br>52 51 — — 48 47 46 — 44 — 42 — 40 39 38 37 36 — 34 33<br>73 — 32 — 30 — — 27 26 25 24 — 22 21 — — — — —<br>— — 15 14 — — — 10 9 8 — 6 5 4 — 2 — |
| SALEABLE | NOT APPLICABLE | 34566-4853 | 0 | C | BLUE | 72 — 70 — 68 — 66 — — 63 62 — — 59 — 57 56 55 — 53<br>52 51 — — 48 47 46 — 44 — 42 — 40 39 — 37 36 — 34 33<br>73 — 32 — 30 — — 27 26 25 24 — 22 21 — 19 18 — —<br>— — 15 14 — — — 10 9 8 — 6 5 4 3 2 — |
| SALEABLE | NOT APPLICABLE | 34566-4863 | 0 | C | BLUE | 72 — 70 — 68 — 66 — — 63 62 — — 59 — 57 — — — 53<br>52 51 — — 48 47 46 — 44 — 42 — 40 39 38 37 36 — 34 33<br>73 — 32 — 30 — — 27 26 25 24 — 22 21 — — — — —<br>— — 15 14 — — — 10 9 8 — 6 5 4 — 2 — |
| SALEABLE | NOT APPLICABLE | 34566-4873 | 0 | C | BLUE | 72 — 70 — 68 — 66 — — 63 62 — — 59 — 57 — — — 53<br>52 51 — — 48 47 46 — 44 — 42 — 40 39 — 37 36 — 34 33<br>73 — 32 — 30 — — 27 26 25 24 — 22 21 — — — — —<br>— — 15 14 — — — 10 9 8 — 6 5 4 — 2 — |
| SALEABLE | NOT APPLICABLE | 34566-4883 | 9 | A | BLACK | 72 — — 69 — 67 — 65 — 63 — — 60 — — 57 56 — — 53<br>— — — 49 — 47 46 — 44 43 — — 40 — — 37 36 35 — 33<br>73 — — 31 30 29 28 — — — 24 — — 21 20 — — 17<br>— 16 15 14 13 — 11 10 — — — — 5 4 3 2 1 |

# MX123 52/66/73/80-WAY RECEPTACLE ASSY SEALED PIN OUT SHEET

| STATUS | GM PART # | HRNS CONN ASSY | | | TPA | GROMMET CAP |
|---|---|---|---|---|---|---|
| | | MATERIAL/PART NUMBER | WIRE DRESS OPTION | KEY OPTION Fp | COLOR OPTION Fp | NUMBERS INDICATE CAVITIES OPEN FOR CIRCUITS Fp |
| SALEABLE | NOT APPLICABLE | 34566-4893 | 9 | B | ST GRY | 72 71 70 69 68 67 66 65 64 63 62 61 60 59 58 57 56 55 54 53<br>52 51 50 49 48 47 46 45 44 43 42 41 40 39 38 37 36 35 34 33<br>73 32 31 30 29 28 27 26 25 24 23 22 21 20 19 18 17<br>16 15 14 13 12 11 10 9 8 7 6 5 4 3 2 1 |
| SALEABLE | NOT APPLICABLE | 34566-4913 | 9 | B | ST GRY | 72 71 70 69 68 67 66 65 64 63 62 61 60 59 58 57 56 55 54 53<br>52 51 50 49 48 47 46 45 44 43 42 41 40 39 38 37 36 35 34 33<br>73 32 31 30 29 28 27 26 25 24 23 22 21 20 19 18 17<br>16 15 14 13 12 11 10 9 8 7 6 5 4 3 2 1 |
| SALEABLE | NOT APPLICABLE | 34566-4923 | 9 | A | BLACK | 72 71 70 69 68 67 66 65 64 63 62 61 60 59 58 57 56 55 54 53<br>52 51 50 49 48 47 46 45 44 43 42 41 40 39 38 37 36 35 34 33<br>73 32 31 30 29 28 27 26 25 24 23 22 21 20 19 18 17<br>16 15 14 13 12 11 10 9 8 7 6 5 4 3 2 1 |
| SALEABLE | NOT APPLICABLE | 34566-4933 | 0 | C | BLUE | 72 71 70 69 68 67 66 65 64 63 62 61 60 59 58 57 56 55 54 53<br>52 51 50 49 48 47 46 45 44 43 42 41 40 39 38 37 36 35 34 33<br>73 32 31 30 29 28 27 26 25 24 23 22 21 20 19 18 17<br>16 15 14 13 12 11 10 9 8 7 6 5 4 3 2 1 |
| SALEABLE | NOT APPLICABLE | 34566-4943 | 0 | A | BLACK | 72 71 70 69 68 67 66 65 64 63 62 61 60 59 58 57 56 55 54 53<br>52 51 50 49 48 47 46 45 44 43 42 41 40 39 38 37 36 35 34 33<br>73 32 31 30 29 28 27 26 25 24 23 22 21 20 19 18 17<br>16 15 14 13 12 11 10 9 8 7 6 5 4 3 2 1 |
| SALEABLE | NOT APPLICABLE | 34566-4953 | 0 | B | ST GRY | 72 71 70 69 68 67 66 65 64 63 62 61 60 59 58 57 56 55 54 53<br>52 51 50 49 48 47 46 45 44 43 42 41 40 39 38 37 36 35 34 33<br>73 32 31 30 29 28 27 26 25 24 23 22 21 20 19 18 17<br>16 15 14 13 12 11 10 9 8 7 6 5 4 3 2 1 |
| SALEABLE | NOT APPLICABLE | 34566-4963 | 9 | A | BLACK | 72 71 70 69 68 67 66 65 64 63 62 61 60 59 58 57 56 55 54 53<br>52 51 50 49 48 47 46 45 44 43 42 41 40 39 38 37 36 35 34 33<br>73 32 31 30 29 28 27 26 25 24 23 22 21 20 19 18 17<br>16 15 14 13 12 11 10 9 8 7 6 5 4 3 2 1 |
| SALEABLE | NOT APPLICABLE | 34566-4973 | 9 | B | ST GRY | 72 71 70 69 68 67 66 65 64 63 62 61 60 59 58 57 56 55 54 53<br>52 51 50 49 48 47 46 45 44 43 42 41 40 39 38 37 36 35 34 33<br>73 32 31 30 29 28 27 26 25 24 23 22 21 20 19 18 17<br>16 15 14 13 12 11 10 9 8 7 6 5 4 3 2 1 |
| SALEABLE | NOT APPLICABLE | 34566-4983 | 0 | B | ST GRY | 72 71 70 69 68 67 66 65 64 63 62 61 60 59 58 57 56 55 54 53<br>52 51 50 49 48 47 46 45 44 43 42 41 40 39 38 37 36 35 34 33<br>73 32 31 30 29 28 27 26 25 24 23 22 21 20 19 18 17<br>16 15 14 13 12 11 10 9 8 7 6 5 4 3 2 1 |
| SALEABLE | NOT APPLICABLE | 34566-4993 | 0 | A | BLACK | 72 71 70 69 68 67 66 65 64 63 62 61 60 59 58 57 56 55 54 53<br>52 51 50 49 48 47 46 45 44 43 42 41 40 39 38 37 36 35 34 33<br>73 32 31 30 29 28 27 26 25 24 23 22 21 20 19 18 17<br>16 15 14 13 12 11 10 9 8 7 6 5 4 3 2 1 |
| SALEABLE | NOT APPLICABLE | 34566-5013 | 9 | B | ST GRY | 72 71 70 69 68 67 66 65 64 63 62 61 60 59 58 57 56 55 54 53<br>52 51 50 49 48 47 46 45 44 43 42 41 40 39 38 37 36 35 34 33<br>73 32 31 30 29 28 27 26 25 24 23 22 21 20 19 18 17<br>16 15 14 13 12 11 10 9 8 7 6 5 4 3 2 1 |
| SALEABLE | NOT APPLICABLE | 34566-5023 | 0 | C | BLUE | 72 71 70 69 68 67 66 65 64 63 62 61 60 59 58 57 56 55 54 53<br>52 51 50 49 48 47 46 45 44 43 42 41 40 39 38 37 36 35 34 33<br>73 32 31 30 29 28 27 26 25 24 23 22 21 20 19 18 17<br>16 15 14 13 12 11 10 9 8 7 6 5 4 3 2 1 |
| SALEABLE | NOT APPLICABLE | 34566-5033 | 0 | A | BLACK | 72 71 70 69 68 67 66 65 64 63 62 61 60 59 58 57 56 55 54 53<br>52 51 50 49 48 47 46 45 44 43 42 41 40 39 38 37 36 35 34 33<br>73 32 31 30 29 28 27 26 25 24 23 22 21 20 19 18 17<br>16 15 14 13 12 11 10 9 8 7 6 5 4 3 2 1 |
| SALEABLE | NOT APPLICABLE | 34566-5043 | 0 | A | BLACK | 73 31 |
| SALEABLE | NOT APPLICABLE | 34566-5053 | 0 | B | ST GRY | 73 47 31 20 17 1 |

# MX123 52/66/73/80-WAY RECEPTACLE ASSY SEALED PIN OUT SHEET

| STATUS | GM PART # | HRNS CONN ASSY | | | TPA | GROMMET CAP | | | | | | | | | | | | | | | | | |
|---|---|---|---|---|---|---|---|---|---|---|---|---|---|---|---|---|---|---|---|---|---|---|---|
| | | MATERIAL/PART NUMBER | WIRE DRESS OPTION | KEY OPTION Fp | COLOR OPTION Fp | NUMBERS INDICATE CAVITIES OPEN FOR CIRCUITS Fp | | | | | | | | | | | | | | | | | |
| SALEABLE | NOT APPLICABLE | 34566-5063 | 9 | H | ST GRY | 80 | 79 | 78 | 77 | 76 | 75 | 74 | 73 | 72 | 71 | 70 | 69 | 68 | 67 | 66 | 65 | 64 | 63 | 62 | 61 |
| | | | | | | 60 | 59 | 58 | 57 | 56 | 55 | 54 | 53 | 52 | 51 | 50 | 49 | 48 | 47 | 46 | 45 | 44 | 43 | 42 | 41 |
| | | | | | | 40 | 39 | 38 | 37 | | 35 | 34 | 33 | 32 | | 30 | 29 | | 27 | 26 | | 24 | 23 | 22 | 21 |
| | | | | | | 20 | 19 | 18 | 17 | | | 14 | 13 | 12 | 11 | 10 | 9 | 8 | | 6 | 5 | | 3 | 2 | |
| SALEABLE | NOT APPLICABLE | 34566-5073 | 9 | A | BLACK | 72 | 71 | 70 | 69 | 68 | 67 | 66 | 65 | 64 | 63 | 62 | 61 | 60 | 59 | 58 | 57 | 56 | 55 | 54 | 53 |
| | | | | | | 52 | 51 | 50 | 49 | 48 | 47 | 46 | 45 | 44 | 43 | 42 | 41 | 40 | 39 | 38 | 37 | 36 | | 34 | 33 |
| | | | | | | 73 | | | | 32 | 31 | 30 | 29 | 28 | 27 | 26 | | 24 | 23 | 22 | 21 | 20 | 19 | 18 | |
| | | | | | | | | | | 16 | | | 13 | 12 | 11 | 10 | 9 | 8 | | | | | | | 1 |
| SALEABLE | NOT APPLICABLE | 34566-5083 | 9 | A | BLACK | | | 70 | 69 | | | | | | 63 | 62 | 61 | 60 | | 58 | 57 | 56 | 55 | 54 | 53 |
| | | | | | | 52 | 51 | | 49 | | | | | 44 | 43 | 42 | 41 | | | 38 | 37 | | | 34 | |
| | | | | | | 73 | | | | 32 | | | 29 | 28 | 27 | 26 | | | 23 | | | | 19 | 18 | |
| | | | | | | | | | | 16 | 15 | | 13 | 12 | 11 | 10 | | 8 | | | | | 3 | | |
| SALEABLE | NOT APPLICABLE | 34566-5093 | 0 | B | ST GRY | 72 | 71 | 70 | 69 | 68 | 67 | 66 | 65 | 64 | 63 | 62 | 61 | 60 | 59 | 58 | 57 | 56 | 55 | 54 | 53 |
| | | | | | | 52 | 51 | 50 | 49 | 48 | 47 | 46 | 45 | 44 | 43 | 42 | 41 | 40 | 39 | 38 | 37 | 36 | 35 | 34 | 33 |
| | | | | | | 73 | | | | | | | 29 | | 27 | | | | 23 | 22 | 21 | | | 18 | |
| | | | | | | | | | | 16 | 15 | 14 | 13 | | | | | 8 | 7 | 6 | 5 | 4 | 3 | | |
| SALEABLE | NOT APPLICABLE | 34566-5113 | 0 | A | BLACK | 72 | 71 | 70 | 69 | 68 | 67 | 66 | | 64 | 63 | 62 | | 60 | 59 | | | | 55 | 54 | 53 |
| | | | | | | 52 | | | 49 | 48 | | | | 44 | 43 | 42 | 41 | 40 | 39 | | | | 35 | 34 | 33 |
| | | | | | | 73 | | | | 32 | | | 29 | | 27 | | 25 | 24 | 23 | | | | 19 | 18 | 17 |
| | | | | | | | | | | 16 | | | 13 | 12 | 11 | | 9 | 8 | 7 | 6 | 5 | 4 | 3 | 2 | 1 |
| SALEABLE | NOT APPLICABLE | 34566-5123 | 9 | C | BLUE | 72 | | 70 | | 68 | 67 | 66 | | | 63 | 62 | | | 59 | | 57 | | | | 53 |
| | | | | | | 52 | 51 | | | 48 | 47 | 46 | 45 | 44 | | | | 40 | 39 | 38 | 37 | 36 | | 34 | 33 |
| | | | | | | 73 | | | | 32 | | 30 | | | 27 | 26 | 25 | 24 | | 22 | 21 | 20 | | | |
| | | | | | | | | | | | 15 | 14 | | | | 10 | 9 | 8 | | 6 | 5 | 4 | | 2 | |
| SALEABLE | NOT APPLICABLE | 34566-5133 | 9 | B | ST GRY | 72 | 71 | 70 | | 68 | 67 | 66 | | | | 62 | 61 | 60 | 59 | 58 | 57 | 56 | 55 | 54 | 53 |
| | | | | | | 52 | 51 | 50 | | 48 | 47 | 46 | | | | 42 | 41 | 40 | 39 | 38 | 37 | 36 | 35 | 34 | 33 |
| | | | | | | 73 | | | | 32 | 31 | 30 | 29 | 28 | 27 | 26 | 25 | 24 | 23 | | | | | | |
| | | | | | | | | | | 16 | 15 | 14 | 13 | | | 10 | 9 | 8 | | | | | | | |
| SALEABLE | NOT APPLICABLE | 34566-5143 | 0 | C | BLUE | 72 | | 70 | | 68 | 67 | 66 | | | 63 | 62 | | | 59 | | 57 | | | | 53 |
| | | | | | | 52 | 51 | | | 48 | 47 | 46 | | 44 | | 42 | | 40 | 39 | | 37 | 36 | | 34 | 33 |
| | | | | | | 73 | | | | 32 | | 30 | | | | 26 | 25 | 24 | | 22 | 21 | 20 | | | |
| | | | | | | | | | | | 15 | 14 | | | | 10 | 9 | 8 | | 6 | 5 | 4 | | 2 | |
| SALEABLE | NOT APPLICABLE | 34566-5153 | 0 | A | BLACK | | | 70 | 69 | | | | | | 63 | 62 | 61 | 60 | | 58 | 57 | 56 | 55 | 54 | 53 |
| | | | | | | 52 | 51 | | 49 | | 47 | | | 44 | 43 | 42 | 41 | | | | 37 | 36 | 35 | 34 | 33 |
| | | | | | | 73 | | | | 32 | | | 29 | 28 | 27 | 26 | 25 | | | | | | 19 | 18 | |
| | | | | | | | | | | 16 | 15 | | 13 | 12 | 11 | 10 | | | | | | | 3 | | |
| SALEABLE | NOT APPLICABLE | 34566-5163 | 9 | A | BLACK | 72 | | | 69 | | 67 | | 65 | | 63 | | | 60 | | | 57 | 56 | | | 53 |
| | | | | | | | | | 49 | | 47 | | | 44 | 43 | | | 40 | | | 37 | 36 | 35 | | 33 |
| | | | | | | 73 | | | | | 31 | 30 | 29 | 28 | | | | 24 | | | 21 | 20 | | | 17 |
| | | | | | | | | | | 16 | 15 | 14 | | | 11 | 10 | | | | | 5 | 4 | 3 | 2 | 1 |
| SALEABLE | NOT APPLICABLE | 34566-5173 | 9 | B | ST GRY | | | | | 68 | 67 | | | 64 | 63 | | | | 59 | | 57 | | | | |
| | | | | | | | | | | | | 46 | 45 | | 43 | | | | 39 | | 37 | | | | |
| | | | | | | 73 | | | | 32 | | 30 | 29 | 28 | 27 | | | | | | 21 | | | | |
| | | | | | | | | | | | | | | | | 10 | | | | 6 | 5 | 4 | 3 | | |
| SALEABLE | NOT APPLICABLE | 34566-5183 | 0 | B | ST GRY | | | | | 68 | 67 | | | 64 | | | | | 59 | 58 | | | | 54 | |
| | | | | | | | | | | | | 46 | 45 | 44 | | | | | 39 | 38 | | | | | |
| | | | | | | 73 | | | | 32 | | 30 | 29 | 28 | 27 | | | | 23 | 22 | | | | | 17 |
| | | | | | | | | | | | | | | 12 | | 10 | | 8 | | | | | | | 1 |
| SALEABLE | NOT APPLICABLE | 34566-5193 | 0 | A | BLACK | | | 70 | 69 | | | | | | 63 | 62 | 61 | 60 | | 58 | 57 | 56 | 55 | 54 | 53 |
| | | | | | | 52 | 51 | | 49 | | | | | 44 | 43 | 42 | 41 | | | | 37 | 36 | | 34 | |
| | | | | | | 73 | | | | 32 | | | 29 | 28 | 27 | 26 | | | | | | | 19 | 18 | 17 |
| | | | | | | | | | | 16 | 15 | | 13 | 12 | 11 | 10 | | | | | | | 3 | 2 | 1 |
| SALEABLE | NOT APPLICABLE | 34566-5213 | 0 | A | BLACK | 72 | 71 | 70 | 69 | 68 | 67 | 66 | 65 | 64 | 63 | 62 | | 60 | 59 | | | | 55 | 54 | 53 |
| | | | | | | 52 | | | 49 | 48 | | | | 44 | 43 | 42 | 41 | 40 | 39 | | | | 35 | 34 | 33 |
| | | | | | | 73 | | | | 32 | | | 29 | | 27 | | 25 | 24 | 23 | | | | 19 | 18 | 17 |
| | | | | | | | | | | 16 | | | 13 | 12 | 11 | | 9 | 8 | 7 | 6 | 5 | 4 | 3 | 2 | 1 |
| SALEABLE | NOT APPLICABLE | 34566-5223 | 0 | C | BLUE | 72 | | 70 | | | 67 | 66 | | | 63 | 62 | | | 59 | | 57 | | | | 53 |
| | | | | | | 52 | 51 | | | 48 | | 46 | | 44 | | 42 | | 40 | 39 | | | | | 34 | 33 |
| | | | | | | 73 | | | | 32 | | 30 | | | 27 | 26 | 25 | | | 22 | 21 | | | | |
| | | | | | | | | | | | 15 | 14 | | | | 10 | 9 | | | 6 | 5 | 4 | | | |

# MX123 52/66/73/80-WAY RECEPTACLE ASSY SEALED PIN OUT SHEET

| STATUS | GM PART # | HRNS CONN ASSY | | | TPA | GROMMET CAP |
|---|---|---|---|---|---|---|
| | | MATERIAL/PART NUMBER | WIRE DRESS OPTION | KEY OPTION Fp | COLOR OPTION Fp | NUMBERS INDICATE CAVITIES OPEN FOR CIRCUITS Fp |
| SALEABLE | NOT APPLICABLE | 34566-5233 | 0 | C | BLUE | 72 70 68 67 66 63 62 59 57 56 55 53<br>52 51 48 47 46 44 42 40 39 38 34 33<br>73 32 30 26 25 22 21 19 18<br>15 14 10 9 6 5 4 3 |
| SALEABLE | NOT APPLICABLE | 34566-5243 | 0 | C | BLUE | 72 71 70 69 68 67 66 65 63 62 61 59 58 57 56 55 54 53<br>51 50 49 48 46 45 44 43 42 41 40 39 38 36 35 34 33<br>73 31 30 29 28 27 26 25 22 21 20 19 18 17<br>16 15 14 9 7 6 5 4 3 2 1 |
| SALEABLE | NOT APPLICABLE | 34566-5253 | 0 | B | ST GRY | 67 66 63 59 58 57 56 55 53<br>50 49 48 46 45 43 39 38 37 36 35 34 33<br>73 29 27 23 22 21 18<br>16 15 14 13 8 7 6 5 4 3 |
| SALEABLE | NOT APPLICABLE | 34566-5263 | 0 | B | ST GRY | 72 71 70 68 67 66 62 61 60 59 58 57 56 55 54 53<br>52 51 50 48 47 46 42 41 40 39 38 37 36 35 34 33<br>73 32 31 30 29 28 27 25 24 17<br>16 15 14 13 10 8 2 1 |
| SALEABLE | NOT APPLICABLE | 34566-5273 | 0 | A | BLACK | 70 69 63 62 61 60 58 57 56 55 54 53<br>52 51 49 44 43 42 41 37 36 34<br>73 32 29 28 27 26 23 19 18<br>16 15 13 12 11 10 9 8 3 |
| SALEABLE | NOT APPLICABLE | 34566-5283 | 0 | C | BLUE | 72 70 68 67 66 63 62 59 57 56 55 54 53<br>52 51 48 47 46 44 42 40 39 34 33<br>73 32 30 26 25 22 21 19 18<br>15 14 10 9 6 5 4 3 |
| SALEABLE | NOT APPLICABLE | 34566-5293 | 0 | A | BLACK | 70 69 63 62 61 60 58 57 56 55 54 53<br>52 51 49 44 43 42 41 40 37 36 34<br>73 32 29 28 27 26 19 18 17<br>16 15 13 12 11 10 3 2 1 |
| SALEABLE | NOT APPLICABLE | 34566-5313 | 0 | C | BLUE | 72 70 68 67 66 63 62 59 57 56 55 53<br>52 51 48 47 46 44 42 40 39 38 37 36 34 33<br>73 32 30 27 26 25 24 22 21 19 18<br>15 14 10 9 8 6 5 4 3 2 |
| SALEABLE | NOT APPLICABLE | 34566-5323 | 0 | G | BLUE | 80 78 77 75 74 73 72 70 69 67 65 64 63 62<br>60 58 57 55 54 52 51 50 49 47 45<br>40 38 37 33 32 31 27 26 25 24<br>20 18 17 10 9 8 6 5 4 3 2 1 |
| SALEABLE | NOT APPLICABLE | 34566-5333 | 0 | A | BLACK | 72 71 70 68 67 66 65 64 63 62 60 59 56 53<br>51 49 48 47 46 45 44 43 41 40<br>73 30 29 28 26 25 24 20 17<br>12 11 |
| SALEABLE | NOT APPLICABLE | 34566-5343 | 0 | B | ST GRY | 68 67 64 59 58 54<br>46 45 39 38<br>73 32 30 29 28 27 23 22 17<br>12 10 8 6 1 |
| SALEABLE | NOT APPLICABLE | 34566-5353 | 9 | B | ST GRY | 68 67 64 63 59 58 55 54<br>46 45 44 43 39 38 35 34<br>73 32 30 29 28 27 23 22 19 17<br>15 13 12 10 6 1 |
| SALEABLE | NOT APPLICABLE | 34566-5363 | 0 | C | BLUE | 72 70 68 66 63 62 59 57 53<br>52 51 48 47 46 44 42 40 39 38 34 33<br>73 32 30 26 25 22 21<br>15 14 10 9 6 5 4 |
| SALEABLE | NOT APPLICABLE | 34566-5373 | 0 | C | BLUE | 72 70 68 66 63 62 59 57 53<br>52 51 48 47 46 44 42 40 39 34 33<br>73 32 30 26 25 22 21<br>15 14 10 9 6 |
| SALEABLE | NOT APPLICABLE | 34566-5383 | 0 | C | BLUE | 72 70 68 66 63 62 59 57 53<br>52 51 48 47 46 44 42 40 39 37 36 34 33<br>73 32 30 26 25 24 22 21<br>15 14 10 9 8 6 5 4 2 |

# MX123 52/66/73/80-WAY RECEPTACLE ASSY SEALED PIN OUT SHEET

| STATUS | GM PART # | HRNS CONN ASSY | | | TPA | GROMMET CAP | | | | | | | | | | | | | | | | | | | |
|---|---|---|---|---|---|---|---|---|---|---|---|---|---|---|---|---|---|---|---|---|---|---|---|---|---|
| | | MATERIAL/PART NUMBER | WIRE DRESS OPTION | KEY OPTION Fp | COLOR OPTION Fp | NUMBERS INDICATE CAVITIES OPEN FOR CIRCUITS Fp | | | | | | | | | | | | | | | | | | | |
| SALEABLE | NOT APPLICABLE | 34566-5393 | 0 | A | BLACK | | | 70 | 69 | | | | | | 63 | | | | | | | 56 | 55 | 54 | 53 |
| | | | | | | 52 | 51 | | 49 | | | | | 44 | 43 | 42 | 41 | | | | | 36 | | 34 | |
| | | | | | | 73 | | | | 32 | | | | 28 | | 26 | | | 23 | | 21 | | 19 | 18 | |
| | | | | | | | | | | 16 | | | | 12 | | 10 | | 8 | | | 5 | | 3 | | |
| SALEABLE | NOT APPLICABLE | 34566-5413 | 0 | A | BLACK | | | 70 | 69 | | | | | | 63 | | | | | | | 56 | 55 | 54 | 53 |
| | | | | | | 52 | 51 | | 49 | | | | | 44 | 43 | 42 | 41 | | | | | 36 | | 34 | |
| | | | | | | 73 | | | | 32 | | | | 28 | | 26 | | | 23 | | 21 | | 19 | 18 | |
| | | | | | | | | | | 16 | 15 | | | 12 | | 10 | | 8 | | | 5 | | 3 | | |
| SALEABLE | NOT APPLICABLE | 34566-5423 | 0 | A | BLACK | | | 70 | 69 | | | | | | 63 | | | | | 58 | | 56 | 55 | 54 | 53 |
| | | | | | | 52 | 51 | | 49 | | | | | 44 | 43 | 42 | 41 | | | | | 36 | | 34 | |
| | | | | | | 73 | | | | 32 | | | | 28 | | 26 | | | | | | | 19 | 18 | |
| | | | | | | | | | | 16 | | | | 12 | | 10 | | | | | | | 3 | | |
| SALEABLE | NOT APPLICABLE | 34566-5433 | 9 | B | ST GRY | | | | | 68 | 67 | | | 64 | | | | | 59 | 58 | | | | 54 | |
| | | | | | | | | | | | | 46 | 45 | | | | | | 39 | 38 | | | | | |
| | | | | | | 73 | | | | 32 | | 30 | 29 | 28 | 27 | | | | 23 | 22 | | | | | 17 |
| | | | | | | | | | | | | | | | | 10 | | | | 6 | | | | | 1 |
| SALEABLE | NOT APPLICABLE | 34566-5443 | 9 | B | ST GRY | | | | | 68 | 67 | | | 64 | | | | | 59 | 58 | | | | 54 | |
| | | | | | | | | | | | | 46 | 45 | | | | | | 39 | 38 | | | | | |
| | | | | | | 73 | | | | 32 | | 30 | 29 | 28 | 27 | | | | 23 | 22 | | | | | 17 |
| | | | | | | | | | | | 15 | | 13 | | | 10 | | | | 6 | | | | | 1 |
| SALEABLE | NOT APPLICABLE | 34566-5453 | 0 | B | ST GRY | | | | | 68 | 67 | | | 64 | | | | | 59 | 58 | | | | 54 | |
| | | | | | | | | | | | | 46 | 45 | | | | | | 39 | 38 | | | | | |
| | | | | | | 73 | | | | 32 | | 30 | 29 | 28 | 27 | | | | 23 | 22 | | | | | 17 |
| | | | | | | | | | | | 15 | | 13 | | | 10 | | | | 6 | | | | | 1 |
| SALEABLE | NOT APPLICABLE | 34566-5463 | 0 | A | BLACK | 72 | | 70 | | | | | | | 63 | | | | | | | | | | |
| | | | | | | 52 | | | 49 | | | | | | | | 41 | | | | | | | | |
| | | | | | | 73 | | | | | 31 | 30 | | 28 | 27 | 26 | | | 23 | | | 20 | 19 | | |
| | | | | | | | | | | 16 | 15 | 14 | | 12 | | 10 | | | | 6 | | | | | |
| SALEABLE | NOT APPLICABLE | 34566-5473 | 0 | A | BLACK | 72 | 71 | 70 | | 68 | 67 | 66 | 65 | 64 | 63 | 62 | | 60 | 59 | | | 56 | | | 53 |
| | | | | | | 52 | 51 | | | 48 | 47 | 46 | 45 | 44 | 43 | 42 | 41 | 40 | | | | | | | |
| | | | | | | 73 | | | | | 31 | 30 | 29 | 28 | 27 | 26 | 25 | 24 | 23 | | | 20 | 19 | | 17 |
| | | | | | | | | | | 16 | 15 | 14 | | 12 | 11 | 10 | | | | 6 | | | | | |
| SALEABLE | NOT APPLICABLE | 34566-5483 | 0 | B | ST GRY | 72 | | 70 | | 68 | | 66 | | 64 | 63 | | | 60 | 59 | | | | 55 | 54 | 53 |
| | | | | | | 52 | | 50 | | 48 | | 46 | | | | | | 40 | 39 | | | | 35 | 34 | 33 |
| | | | | | | 73 | | | | 32 | 31 | 30 | 29 | 28 | 27 | 26 | 25 | 24 | | | | 20 | | | 17 |
| | | | | | | | | | | 16 | | | | | | 10 | | 8 | | | 5 | 4 | | 2 | 1 |
| SALEABLE | NOT APPLICABLE | 34566-5493 | 0 | A | BLACK | 72 | | 70 | 69 | | | | | | 63 | | | 60 | 59 | 58 | 57 | 56 | 55 | 54 | 53 |
| | | | | | | 52 | 51 | | 49 | | | | | 44 | 43 | 42 | 41 | 40 | | | 37 | 36 | | 34 | |
| | | | | | | 73 | | | | 32 | | | | 28 | | 26 | | | | | | | 19 | 18 | 17 |
| | | | | | | | | | | 16 | 15 | | | 12 | | 10 | | | | | | | 3 | 2 | 1 |
| SALEABLE | NOT APPLICABLE | 34566-5513 | 9 | B | ST GRY | | | | | 68 | 67 | | | 64 | 63 | | | | | 58 | | | 55 | | |
| | | | | | | | | | | | | 46 | 45 | | 43 | | | | | 38 | | | 35 | | |
| | | | | | | 73 | | | | 32 | | 30 | 29 | 28 | 27 | | | | | 22 | | | 19 | | 17 |
| | | | | | | | | | | | | | | | | 10 | | | | | | | | | 1 |
| SALEABLE | NOT APPLICABLE | 34566-5523 | 9 | A | BLACK | 72 | | | 69 | | 67 | 66 | 65 | | 63 | | | 60 | | | 57 | 56 | | | 53 |
| | | | | | | | | | 49 | | 47 | | | 44 | 43 | 42 | | 40 | | | 37 | 36 | 35 | | 33 |
| | | | | | | 73 | | | | | 31 | 30 | 29 | 28 | 27 | 26 | | 24 | | | 21 | 20 | | | 17 |
| | | | | | | | | | | 16 | 15 | 14 | 13 | | 11 | 10 | | | | | 5 | 4 | 3 | 2 | 1 |
| SALEABLE | NOT APPLICABLE | 34566-5533 | 9 | B | ST GRY | | | | | 68 | 67 | | | 64 | | | | | 59 | 58 | | | | 54 | |
| | | | | | | | | | | | | 46 | 45 | | | | | | 39 | 38 | | | | | |
| | | | | | | 73 | | | | 32 | | 30 | 29 | 28 | 27 | | | | 23 | 22 | | | | | 17 |
| | | | | | | | | | | | | | | | | 10 | 9 | 8 | | 6 | | | | | 1 |
| SALEABLE | NOT APPLICABLE | 34566-5543 | 9 | A | BLACK | | | | | 68 | 67 | | | 64 | | | | | 59 | 58 | | | | 54 | |
| | | | | | | | | | | | | 46 | 45 | | | | | | 39 | 38 | | | | | |
| | | | | | | 73 | | | | 32 | | 30 | 29 | 28 | 27 | | | | 23 | 22 | | | | | 17 |
| | | | | | | | | | | | | | | 12 | | 10 | | 8 | | 6 | | | | | 1 |
| SALEABLE | NOT APPLICABLE | 34566-5553 | 9 | B | ST GRY | | | | | 68 | 67 | | | 64 | | | | | 59 | 58 | | | | 54 | |
| | | | | | | | | | | | | 46 | 45 | | | | | | 39 | 38 | | | | | |
| | | | | | | 73 | | | | 32 | | 30 | 29 | 28 | 27 | | | | 23 | 22 | | | | | 17 |
| | | | | | | | | | | | | | | 12 | | 10 | | 8 | | 6 | | | | | 1 |

# MX123 52/66/73/80-WAY RECEPTACLE ASSY SEALED PIN OUT SHEET

| STATUS | GM PART # | HRNS CONN ASSY | | | TPA | GROMMET CAP | | | | | | | | | | | | | | | | | |
|---|---|---|---|---|---|---|---|---|---|---|---|---|---|---|---|---|---|---|---|---|---|---|---|
| | | MATERIAL/PART NUMBER | WIRE DRESS OPTION | KEY OPTION Fp | COLOR OPTION Fp | NUMBERS INDICATE CAVITIES OPEN FOR CIRCUITS Fp | | | | | | | | | | | | | | | | | |
| SALEABLE | NOT APPLICABLE | 34566-5563 | 0 | A | BLACK | 72 | 71 | 70 | 69 | | | | | 64 | 63 | | | 60 | 59 | 58 | 57 | 56 | 55 | 54 | 53 |
| | | | | | | 52 | 51 | | 49 | 48 | 47 | | 45 | 44 | 43 | 42 | 41 | | | | 37 | 36 | | 34 | 33 |
| | | | | | | 73 | | | | 32 | | 30 | | 28 | | 26 | | | | | | | 19 | 18 | 17 |
| | | | | | | | | | | 16 | 15 | | | 12 | | 10 | | | | | | | 3 | 2 | 1 |
| SALEABLE | NOT APPLICABLE | 34566-5573 | 0 | C | BLUE | 72 | | 70 | | 68 | | 66 | | | 63 | 62 | | | 59 | 58 | 57 | 56 | 55 | | 53 |
| | | | | | | 52 | 51 | | 49 | 48 | 47 | 46 | | 44 | | 42 | | 40 | 39 | 38 | 37 | 36 | | 34 | 33 |
| | | | | | | 73 | | | | 32 | | 30 | | | | 26 | 25 | 24 | 23 | 22 | 21 | 20 | 19 | 18 | 17 |
| | | | | | | | | | | | 15 | 14 | 13 | | | 10 | 9 | 8 | 7 | 6 | 5 | 4 | | 2 | 1 |
| SALEABLE | NOT APPLICABLE | 34566-5583 | 0 | B | ST GRY | 72 | | 70 | | 68 | | 66 | | 64 | 63 | | | 60 | 59 | | | | 55 | 54 | 53 |
| | | | | | | 52 | | 50 | | 48 | | 46 | | | | | | 40 | 39 | | | | 35 | 34 | 33 |
| | | | | | | 73 | | | | 32 | 31 | 30 | 29 | 28 | 27 | 26 | 25 | 24 | 23 | | | 20 | | | 17 |
| | | | | | | | | | | 16 | | | | | | 10 | | 8 | 7 | | 5 | 4 | | 2 | 1 |
| SALEABLE | NOT APPLICABLE | 34566-5593 | 0 | C | BLUE | 72 | | 70 | | 68 | | 66 | | | 63 | 62 | | | 59 | | 57 | | 55 | | 53 |
| | | | | | | 52 | 51 | | | 48 | 47 | 46 | | 44 | | 42 | | 40 | 39 | | | | | 34 | 33 |
| | | | | | | 73 | | | | 32 | | 30 | | | | 26 | 25 | | 23 | 22 | 21 | | | | |
| | | | | | | | 15 | 14 | | | | | | | | 10 | 9 | | 7 | 6 | 5 | 4 | | | |
| SALEABLE | NOT APPLICABLE | 34566-5613 | 0 | C | BLUE | 72 | | 70 | | 68 | | | | | 63 | 62 | | | 59 | 58 | 57 | | | | 53 |
| | | | | | | 52 | 51 | | | 48 | 47 | | | 44 | | 42 | | 40 | 39 | | 37 | 36 | | 34 | 33 |
| | | | | | | 73 | | | | 32 | | 30 | | | 27 | 26 | 25 | 24 | 23 | 22 | 21 | 20 | | | 17 |
| | | | | | | | 15 | 14 | 13 | | | | | | | | | 8 | 7 | 6 | 5 | 4 | | 2 | 1 |
| SALEABLE | NOT APPLICABLE | 34566-5623 | 0 | C | BLUE | 72 | | 70 | | 68 | | | | | 63 | 62 | | | 59 | | 57 | | | | 53 |
| | | | | | | 52 | 51 | | | 48 | 47 | | | 44 | | 42 | | 40 | 39 | | 37 | 36 | | 34 | 33 |
| | | | | | | 73 | | | | 32 | | 30 | | | 27 | 26 | 25 | 24 | 23 | 22 | 21 | 20 | | | |
| | | | | | | | 15 | 14 | 13 | | | | | | | | | 8 | 7 | 6 | 5 | 4 | | 2 | |
| SALEABLE | NOT APPLICABLE | 34566-5633 | 0 | B | ST GRY | 72 | | | | | | | | | | 62 | 61 | | | | | | | | |
| | | | | | | 52 | | | | 48 | | 46 | | 44 | 43 | | 41 | 40 | | | | | | | |
| | | | | | | 73 | | | | | | 30 | | | | | | | | | | 20 | 19 | 18 | |
| | | | | | | 16 | 15 | 14 | | | | | | | | | | | | | | 4 | | | |
| SALEABLE | NOT APPLICABLE | 34566-5643 | 0 | B | ST GRY | 72 | | | | | | | | | | 62 | 61 | | | | | | | | |
| | | | | | | 52 | | | | 48 | | 46 | | | 43 | | 41 | 40 | | | | | | | |
| | | | | | | 73 | | | | | | 30 | | | | | | | | | | 20 | 19 | 18 | |
| | | | | | | 16 | 15 | 14 | | | | | | | | | | | | | | 4 | | | |
| SALEABLE | NOT APPLICABLE | 34566-5653 | 0 | A | BLACK | 72 | 71 | 70 | 69 | 68 | | 66 | 65 | 64 | 63 | | 61 | 60 | | | 57 | 56 | | 54 | 53 |
| | | | | | | 52 | 51 | 50 | 49 | 48 | | 46 | 45 | 44 | 43 | | | 40 | 39 | 38 | 37 | 36 | | 34 | 33 |
| | | | | | | 73 | | | | 32 | 31 | 30 | 29 | 28 | | 26 | 25 | | 23 | 22 | 21 | | | | 17 |
| | | | | | | | | | | | 15 | 14 | 13 | 12 | | | 9 | | 7 | 6 | 5 | | | 2 | |
| SALEABLE | NOT APPLICABLE | 34566-5663 | 0 | C | BLUE | | | | 69 | | 67 | 66 | | 64 | | 62 | | 60 | | | 57 | | 55 | 54 | |
| | | | | | | 52 | 51 | 50 | | 48 | | 46 | 45 | 44 | | 42 | | | | | 37 | | 35 | 34 | 33 |
| | | | | | | 73 | | | | 32 | 31 | | | 28 | 27 | 26 | | | | | | | 19 | 18 | |
| | | | | | | | | | | 16 | 15 | 14 | 13 | 12 | 11 | 10 | 9 | | | | | | | | |
| SALEABLE | NOT APPLICABLE | 34566-5673 | 0 | C | BLUE | | | | 69 | | 67 | 66 | | 64 | | | 61 | 60 | | | 57 | | | 54 | |
| | | | | | | 52 | 51 | 50 | 49 | 48 | | 46 | 45 | 44 | | | 41 | | | | 37 | | | 34 | 33 |
| | | | | | | 73 | | | | 32 | 31 | | | 28 | 27 | | 25 | | | | | | | 18 | |
| | | | | | | | | | | 16 | 15 | 14 | 13 | 12 | 11 | 10 | 9 | | | | | | | | |
| SALEABLE | NOT APPLICABLE | 34566-5683 | 0 | B | ST GRY | 72 | | | | | | | | | | 62 | 61 | | | | | | | | |
| | | | | | | 52 | | | | 48 | | 46 | | 44 | 43 | | 41 | 40 | | | | | | | |
| | | | | | | 73 | | | | | | 30 | | | | | | | | | | 20 | 19 | 18 | |
| | | | | | | 16 | | 14 | | | | | | | | | | | | | | 4 | | | |
| SALEABLE | NOT APPLICABLE | 34566-5693 | 0 | A | BLACK | 72 | 71 | 70 | 69 | 68 | | 66 | 65 | 64 | 63 | | 61 | 60 | | | 57 | 56 | | 54 | 53 |
| | | | | | | 52 | 51 | 50 | 49 | 48 | | 46 | 45 | 44 | 43 | | | 40 | 39 | 38 | 37 | 36 | | 34 | 33 |
| | | | | | | 73 | | | | 32 | 31 | 30 | 29 | 28 | | 26 | 25 | | 23 | 22 | 21 | 20 | | | |
| | | | | | | | | | | | 15 | 14 | 13 | 12 | | | 9 | | 7 | 6 | 5 | 4 | | 2 | |
| SALEABLE | NOT APPLICABLE | 34566-5713 | 0 | C | BLUE | | | | 69 | | 67 | 66 | | 64 | | 62 | | 60 | | | 57 | | 55 | 54 | |
| | | | | | | 52 | 51 | 50 | | 48 | | 46 | 45 | 44 | | 42 | | | | | 37 | | 35 | 34 | 33 |
| | | | | | | 73 | | | | 32 | 31 | | | 28 | 27 | 26 | | | | | | | 19 | 18 | 17 |
| | | | | | | | | | | 16 | 15 | 14 | 13 | 12 | 11 | 10 | 9 | 8 | 7 | | | | | | |
| SALEABLE | NOT APPLICABLE | 34566-5723 | 0 | C | BLUE | | | | 69 | | 67 | 66 | | 64 | | | 61 | 60 | | | 57 | | | 54 | |
| | | | | | | 52 | 51 | 50 | 49 | 48 | | 46 | 45 | 44 | | | 41 | | | | 37 | | | 34 | 33 |
| | | | | | | 73 | | | | | 31 | | | 28 | 27 | | 25 | | | | | | | 18 | |
| | | | | | | 16 | 15 | 14 | 13 | 12 | 11 | 10 | 9 | 8 | 7 | | | | | | | | | | |

# MX123 52/66/73/80-WAY RECEPTACLE ASSY SEALED PIN OUT SHEET

| STATUS | GM PART # | HRNS CONN ASSY | | | TPA | GROMMET CAP | | | | | | | | | | | | | | | | | |
|---|---|---|---|---|---|---|---|---|---|---|---|---|---|---|---|---|---|---|---|---|---|---|---|
| | | MATERIAL/PART NUMBER | WIRE DRESS OPTION | KEY OPTION Fp | COLOR OPTION Fp | NUMBERS INDICATE CAVITIES OPEN FOR CIRCUITS Fp | | | | | | | | | | | | | | | | | |
| SALEABLE | NOT APPLICABLE | 34566-5733 | 0 | A | BLACK | | 71 | 70 | 69 | | | | | 64 | 63 | | | 60 | 59 | 58 | 57 | 56 | 55 | 54 | 53 |
| | | | | | | 52 | 51 | | 49 | | | | 45 | 44 | 43 | 42 | 41 | | | | 37 | 36 | | 34 | |
| | | | | | | 73 | | | | 32 | | 30 | | 28 | | 26 | | | | | | | 19 | 18 | |
| | | | | | | | | | | 16 | 15 | | | 12 | | 10 | | | | | | | 3 | | |
| SALEABLE | NOT APPLICABLE | 34566-5743 | 0 | A | BLACK | | 71 | 70 | 69 | | 67 | | | 64 | 63 | | | 60 | 59 | | 57 | 56 | 55 | 54 | 53 |
| | | | | | | 52 | 51 | | 49 | | | | 45 | 44 | 43 | 42 | 41 | | | | 37 | 36 | | 34 | |
| | | | | | | 73 | | | | 32 | | 30 | | 28 | | 26 | | | | | | | 19 | 18 | |
| | | | | | | | | | | 16 | 15 | | | 12 | | 10 | | | | | | | 3 | | |
| SALEABLE | NOT APPLICABLE | 34566-5753 | 0 | A | BLACK | | 71 | 70 | 69 | | | | | 64 | 63 | | | 60 | 59 | | 57 | 56 | 55 | 54 | 53 |
| | | | | | | 52 | 51 | | 49 | | | | 45 | 44 | 43 | 42 | 41 | | | | 37 | 36 | | 34 | |
| | | | | | | 73 | | | | 32 | | 30 | | 28 | | 26 | | | 23 | | 21 | | 19 | 18 | |
| | | | | | | | | | | 16 | 15 | | | 12 | | 10 | | 8 | | | 5 | | 3 | | |
| SALEABLE | NOT APPLICABLE | 34566-5763 | 0 | C | BLUE | 72 | | 70 | | 68 | | 66 | | | 63 | 62 | | | 59 | | 57 | | | | 53 |
| | | | | | | 52 | 51 | | | 48 | 47 | 46 | | 44 | | 42 | | 40 | 39 | | 37 | 36 | | 34 | 33 |
| | | | | | | 73 | | | | 32 | | 30 | | | 27 | 26 | 25 | 24 | | 22 | 21 | 20 | | | |
| | | | | | | | | | | | 15 | 14 | 13 | | | 10 | 9 | 8 | | 6 | 5 | 4 | | 2 | |
| SALEABLE | NOT APPLICABLE | 34566-5773 | 0 | C | BLUE | 72 | | 70 | | 68 | | | | | 63 | 62 | | | 59 | 58 | 57 | | | | 53 |
| | | | | | | 52 | 51 | | | 48 | 47 | | | 44 | | 42 | | 40 | 39 | | 37 | 36 | | 34 | 33 |
| | | | | | | 73 | | | | 32 | | 30 | | | 27 | 26 | 25 | 24 | | 22 | 21 | 20 | | | 17 |
| | | | | | | | | | | | 15 | 14 | 13 | | | | | 8 | | 6 | 5 | 4 | | 2 | 1 |
| SALEABLE | NOT APPLICABLE | 34566-5783 | 0 | C | BLUE | 72 | | 70 | | 68 | | | | | 63 | 62 | | | 59 | | 57 | | | | 53 |
| | | | | | | 52 | 51 | | | 48 | 47 | | | 44 | | 42 | | 40 | 39 | | 37 | 36 | | 34 | 33 |
| | | | | | | 73 | | | | 32 | | 30 | | | 27 | 26 | 25 | 24 | | 22 | 21 | 20 | | | |
| | | | | | | | | | | | 15 | 14 | 13 | | | | | 8 | | 6 | 5 | 4 | | 2 | |
| SALEABLE | NOT APPLICABLE | 34566-5793 SAME AS P/N 34566-4013 | 0 | B | ST GRY | 72 | | 70 | | 68 | | 66 | | | | | | 60 | 59 | | | | 55 | 54 | 53 |
| | | | | | | 52 | | 50 | | 48 | | 46 | | | | | | 40 | 39 | | | | 35 | 34 | 33 |
| | | | | | | 73 | | | | 32 | 31 | 30 | 29 | 28 | 27 | 26 | 25 | 24 | | | | | | | 17 |
| | | | | | | | | | | 16 | | | | | | 10 | | 8 | | | | | | 2 | 1 |
| SALEABLE | NOT APPLICABLE | 34566-5813 | 0 | B | ST GRY | 72 | | 70 | | 68 | | 66 | | | | | | 60 | 59 | | | | 55 | 54 | 53 |
| | | | | | | 52 | | 50 | | 48 | | 46 | | | | | | 40 | 39 | | | | 35 | 34 | 33 |
| | | | | | | 73 | | | | 32 | 31 | 30 | 29 | 28 | 27 | 26 | 25 | 24 | 23 | | | | 19 | 18 | 17 |
| | | | | | | | | | | 16 | | | | | | 10 | | 8 | 7 | | | | | 2 | 1 |
| SALEABLE | NOT APPLICABLE | 34566-5823 | 0 | A | BLACK | 72 | | 70 | | | | | | | 63 | | | | | | | | | | |
| | | | | | | 52 | | | 49 | | | | | | 43 | | 41 | | | | | | | | |
| | | | | | | 73 | | | | | 31 | 30 | | 28 | 27 | 26 | | | 23 | | | 20 | 19 | | |
| | | | | | | | | | | 16 | 15 | 14 | | | | 10 | | | | 6 | | | | | |
| SALEABLE | NOT APPLICABLE | 34566-5833 | 0 | A | BLACK | 72 | | 70 | | | | | | | 63 | | | | | | | | | | |
| | | | | | | 52 | | | 49 | | | | | | 43 | | 41 | | | | | | | | |
| | | | | | | 73 | | | | | 31 | 30 | | 28 | 27 | 26 | | | 23 | | | 20 | 19 | | |
| | | | | | | | | | | 16 | 15 | 14 | | 12 | | 10 | | | | 6 | | | | | |
| SALEABLE | NOT APPLICABLE | 34566-5843 | 0 | H | ST GRY | | 79 | | | | | 74 | 73 | 72 | 71 | | | 68 | 67 | | 65 | 64 | 63 | 62 | 61 |
| | | | | | | | 59 | | 57 | | | 54 | | 52 | | | | | | | | | | 42 | 41 |
| | | | | | | | | 38 | | | | 34 | 33 | | | | 29 | | 27 | | 25 | | | | |
| | | | | | | | | 18 | | | 15 | 14 | | | 11 | 10 | 9 | 8 | 7 | | | | | | |
| SALEABLE | NOT APPLICABLE | 34566-5853 | 0 | H | ST GRY | | 79 | | | | | 74 | 73 | 72 | 71 | | | 68 | 67 | | 65 | 64 | 63 | 62 | 61 |
| | | | | | | | 59 | | 57 | | | 54 | | 52 | | | | | | | | | 43 | 42 | 41 |
| | | | | | | | | 38 | | | | | 33 | | | | 29 | | 27 | | 25 | | | | |
| | | | | | | | | 18 | | | 15 | 14 | | | 11 | 10 | 9 | 8 | 7 | | | | | | |
| SALEABLE | NOT APPLICABLE | 34566-5863 | 0 | C | BLUE | 72 | | 70 | | | | 66 | | | 63 | 62 | | | 59 | | 57 | 56 | 55 | | 53 |
| | | | | | | 52 | 51 | | | | | 46 | | 44 | | 42 | | 40 | 39 | | 37 | 36 | | 34 | 33 |
| | | | | | | 73 | | | | 32 | | 30 | | | | 26 | 25 | | | 22 | 21 | | 19 | 18 | |
| | | | | | | | | | | | 15 | 14 | | | | 10 | 9 | | | 6 | | | 3 | | |
| SALEABLE | NOT APPLICABLE | 34566-5873 | 0 | B | ST GRY | 72 | | | | | | | | | | 62 | 61 | | | | | | | | |
| | | | | | | 52 | | | | 48 | 47 | 46 | | 44 | 43 | | 41 | 40 | | | | | | | |
| | | | | | | 73 | | | | | | 30 | | | | | | | | | | 20 | 19 | 18 | |
| | | | | | | | | | | 16 | 15 | 14 | | | | | | | | | | 4 | | | |
| SALEABLE | NOT APPLICABLE | 34566-5883 | 0 | B | ST GRY | 72 | | | | | | | | | | 62 | 61 | | | | | | | | |
| | | | | | | 52 | | | | 48 | 47 | 46 | | | 43 | | 41 | 40 | | | | | | | |
| | | | | | | 73 | | | | | | 30 | | | | | | | | | | 20 | 19 | 18 | |
| | | | | | | | | | | 16 | 15 | 14 | | | | | | | | | | 4 | | | |

# MX123 52/66/73/80-WAY RECEPTACLE ASSY SEALED PIN OUT SHEET

| STATUS | GM PART # | HRNS CONN ASSY | | | TPA | GROMMET CAP |
|---|---|---|---|---|---|---|
| | | MATERIAL/PART NUMBER | WIRE DRESS OPTION | KEY OPTION Fp | COLOR OPTION Fp | NUMBERS INDICATE CAVITIES OPEN FOR CIRCUITS Fp |
| SALEABLE | NOT APPLICABLE | 34566-5893 | 0 | C | BLUE | 69 67 66 62 60 57 55 54<br>52 51 50 48 46 45 44 42 37 35 34 33<br>73 32 28 27 26 19 18<br>16 15 14 13 12 11 10 9 |
| SALEABLE | NOT APPLICABLE | 34566-5913 | 0 | C | BLUE | 69 67 66 64 61 60 57 54<br>52 51 50 49 48 46 45 44 41 37 34 33<br>73 32 28 27 25 18<br>16 15 14 13 12 11 10 9 |
| SALEABLE | NOT APPLICABLE | 34566-5933 | 0 | C | BLUE | 72 70 68 66 63 62 59 57 56 55 53<br>52 51 48 47 46 44 42 40 39 34 33<br>73 32 30 26 25 23 22 21<br>15 14 10 9 7 6 5 4 |
| SALEABLE | NOT APPLICABLE | 34566-5943 | 0 | C | BLUE | 72 70 68 67 66 63 62 59 57 56 55 53<br>52 51 49 48 47 46 44 42 40 39 34 33<br>73 32 30 27 26 25 22 21 20<br>15 14 13 10 9 6 5 4 |
| SALEABLE | NOT APPLICABLE | 34566-5953 | 0 | A | BLACK | 71 70 69 65 64 63 62 61 60 58 57 56 55 54 53<br>52 51 49 48 47 45 44 43 42 41 37 36 34<br>73 32 30 29 28 27 26 24 19 18<br>16 15 13 12 11 10 3 |
| SALEABLE | NOT APPLICABLE | 34566-5963 | 0 | B | ST GRY | 72 71 70 68 67 66 62 61 60 59 58 57 56 55 54 53<br>52 51 50 48 47 46 42 41 40 39 38 37 36 35 34 33<br>73 32 31 30 29 28 27 26 25 24 18<br>16 15 14 13 10 9 8 3 |
| SALEABLE | NOT APPLICABLE | 34566-5973 | 0 | C | BLUE | 72 70 68 67 66 63 62 59 57 56 55 53<br>52 51 48 47 46 44 42 40 39 34 33<br>73 32 30 27 26 25 22 21 19 18<br>15 14 10 9 6 5 4 3 |
| SALEABLE | NOT APPLICABLE | 34566-5983 | 0 | C | BLUE | 69 67 66 64 62 60 57 55 54<br>52 51 50 48 46 45 44 42 37 35 34 33<br>73 32 28 27 26 19 18<br>16 15 14 13 12 11 10 9 |
| SALEABLE | NOT APPLICABLE | 34566-5993 | 0 | A | BLACK | 71 70 69 67 66 65 63 62 61 60 58 57 56 55 54 53<br>52 51 50 49 47 45 44 43 42 41 40 39 37 36 35 34<br>73 32 31 30 29 28 27 26 25 24 23 21 20 19 18 17<br>16 15 14 13 12 11 10 9 8 6 5 3 1 |
| SALEABLE | NOT APPLICABLE | 34566-6013 | 0 | B | ST GRY | 69 67 65 61 60 59 58 57 54 53<br>51 50 49 48 47 46 45 43 40 39 37 34 33<br>73 32 31 30 29 26 24 23 22 21 20 18<br>16 15 14 13 10 9 8 7 6 5 4 |
| SALEABLE | NOT APPLICABLE | 34566-6023 | 0 | A | BLACK | 72 71 70 69 68 67 60 59 58 57 56 54 53<br>52 51 50 49 48 47 45 44 43 40 39 38 37 36 35 34 33<br>73 32 31 30 29 28 24 23 22 21 20 19 17<br>16 15 13 12 11 10 7 6 5 4 3 2 1 |
| SALEABLE | NOT APPLICABLE | 34566-6033 | 0 | A | BLACK | 70 69 63 62 61 58 57 56 55 54 53<br>52 51 49 44 43 42 41 37 36 34<br>73 32 29 28 27 26 21 19 18<br>16 15 13 12 11 10 8 5 3 |
| SALEABLE | NOT APPLICABLE | 34566-6043 | 0 | B | ST GRY | 68 67 66 65 64 58 55<br>46 45 38 35<br>73 32 30 29 28 27 22 19 17<br>16 10 1 |
| SALEABLE | NOT APPLICABLE | 34566-6053 | 0 | B | ST GRY | 72 62 61<br>52 48 47 46 43 41 40<br>73 30 20 19 18<br>16 15 14 4 2 |
| SALEABLE | NOT APPLICABLE | 34566-6063 | 0 | C | BLUE | 69 67 66 64 62 60 57 55 54<br>52 51 50 48 46 45 44 42 37 35 34 33<br>73 32 28 27 26 19 18 17<br>16 15 14 13 12 11 10 9 |

# MX123 52/66/73/80-WAY RECEPTACLE ASSY SEALED PIN OUT SHEET

| STATUS | GM PART # | HRNS CONN ASSY | | | TPA | GROMMET CAP |
|---|---|---|---|---|---|---|
| | | MATERIAL/PART NUMBER | WIRE DRESS OPTION | KEY OPTION Fp | COLOR OPTION Fp | NUMBERS INDICATE CAVITIES OPEN FOR CIRCUITS Fp |
| SALEABLE | NOT APPLICABLE | 34566-6073 | 0 | C | BLUE | 69 67 66 64 61 60 57 54<br>52 51 50 49 48 46 45 44 41 37 34 33<br>73 32 28 27 25 18 17<br>16 15 14 13 12 11 10 9 |
| SALEABLE | NOT APPLICABLE | 34566-6083 | 0 | C | BLUE | 72 70 68 67 66 63 62 59 57 53<br>52 51 48 47 46 44 42 40 39 37 36 34 33<br>73 32 30 26 25 22 21<br>15 14 10 9 6 5 4 2 |
| SALEABLE | NOT APPLICABLE | 34566-6093 | 0 | B | ST GRY | 72 70 67 63 62 61 60 59<br>52 46 43 41 40<br>73 27 20 19 18<br>16 14 11 4 |
| SALEABLE | NOT APPLICABLE | 34566-6113 | 0 | A | BLACK | 72 71 70 69 68 66 65 64 63 62 61 60 58 57 56 55 54 53<br>52 51 50 49 48 46 45 44 43 42 41 40 39 38 37 36 34 33<br>73 32 31 30 29 28 27 26 25 23 22 21 20 19 18<br>16 15 14 13 12 11 10 9 8 7 6 5 4 3 2 |
| SALEABLE | NOT APPLICABLE | 34566-6123 | 0 | C | BLUE | 69 67 66 64 62 60 57 54<br>52 51 50 48 46 45 44 42 37 34 33<br>73 28 27 26<br>16 15 14 13 12 11 10 9 8 7 |
| SALEABLE | NOT APPLICABLE | 34566-6133 | 9 | C | BLUE | 72 70 68 67 63 62 59 57 53<br>52 51 48 47 44 42 40 39 38 37 36 34 33<br>73 32 30 26 25 24 22 21<br>15 14 9 8 6 5 4 2 |
| SALEABLE | NOT APPLICABLE | 34566-6173 | 9 | B | ST GRY | 67 66<br>48 47 41<br>73 32 31 30 29 27 26 25 24 22 21 19 18 17<br>16 15 14 13 11 10 9 8 7 6 5 4 3 1 |
| SALEABLE | NOT APPLICABLE | 34566-6183 | 9 | A | BLACK | 66<br>48 47 41<br>73 32 31 30 29 27 26 25 24 22 21 19 18 17<br>16 15 14 13 11 10 9 8 7 6 5 4 3 1 |
| SALEABLE | NOT APPLICABLE | 34566-6193 | 9 | B | ST GRY | 72 71 70 69 68 67 66 65 64 62 61 60 59 58 57 56 55 54<br>52 51 50 49 46 44 41 40 38 37 36<br>73 32 31 30 29 28 27 26 25 24 21 20 18 17<br>16 15 14 13 12 10 9 8 7 6 5 4 3 2 |
| SALEABLE | NOT APPLICABLE | 34566-6213 | 9 | A | BLACK | 67 66<br>48 47 41<br>73 32 31 30 29 27 26 25 24 22 21 19 18 17<br>16 15 14 13 11 10 9 8 7 6 5 4 3 1 |
| SALEABLE | NOT APPLICABLE | 34566-6223 | 9 | C | BLUE | 72 70 68 66 63 62 59 53<br>52 51 48 47 46 44 40 39 34 33<br>73 32 30 27 26 25 22 21 20<br>15 14 13 10 9 6 5 4 |
| SALEABLE | NOT APPLICABLE | 34566-6233 | 9 | B | ST GRY | 72 70 68 66 60 59 55 54 53<br>52 50 48 46 40 39 35 34 33<br>73 32 31 30 29 28 27 26 25 24 17<br>16 10 8 2 1 |
| SALEABLE | NOT APPLICABLE | 34566-6243 | 9 | A | BLACK | 71 70 69 68 64 63 60 59 58 57 56 55 54 53<br>52 51 50 49 45 44 43 42 41 39 37 36 34<br>73 32 30 28 26 19 18<br>16 15 14 12 10 3 |
| SALEABLE | NOT APPLICABLE | 34566-6253 | 9 | C | BLUE | 72 70 68 67 66 63 62 59 57 53<br>52 51 49 48 47 46 44 40 39 37 36 34 33<br>73 32 30 27 26 25 24 22 21 20<br>15 14 13 10 9 8 6 5 4 2 |
| SALEABLE | NOT APPLICABLE | 34566-6263 | 9 | B | ST GRY | 72 71 70 68 67 66 62 61 60 59 58 57 56 55 54 53<br>52 51 50 48 47 46 42 41 40 39 38 37 36 35 34 33<br>73 32 31 30 29 28 27 26 25 24 18 17<br>16 15 14 13 10 8 3 2 1 |

# MX123 52/66/73/80-WAY RECEPTACLE ASSY SEALED PIN OUT SHEET

| STATUS | GM PART # | HRNS CONN ASSY | | | TPA | GROMMET CAP |
|---|---|---|---|---|---|---|
| | | MATERIAL/PART NUMBER | WIRE DRESS OPTION | KEY OPTION Fp | COLOR OPTION Fp | NUMBERS INDICATE CAVITIES OPEN FOR CIRCUITS Fp |
| SALEABLE | NOT APPLICABLE | 34566-6273 | 9 | B | ST GRY | 71 70 69 65 64 63 62 61 60 58 57 56 55 54 53<br>52 51 50 49 48 47 45 44 43 42 41 39 37 36 34<br>73 32 30 29 28 27 26 24 19 18<br>16 15 14 13 12 11 10 3 |
| SALEABLE | NOT APPLICABLE | 34566-6283 | 9 | C | BLUE | 72 70 68 67 66 63 62 59 57 53<br>52 51 48 47 46 44 40 39 34 33<br>73 32 30 27 26 25 22 21<br>15 14 10 9 6 5 4 |
| SALEABLE | NOT APPLICABLE | 34566-6293 | 9 | B | ST GRY | 72 71 70 68 67 66 62 61 60 59 58 57 56 55 54 53<br>52 51 50 48 47 46 42 41 40 39 38 37 36 35 34 33<br>73 32 31 30 29 28 27 26 25 24 17<br>16 15 14 13 10 8 2 1 |
| SALEABLE | NOT APPLICABLE | 34566-6313 | 9 | B | ST GRY | 70 69 63 62 61 60 58 57 56 55 54 53<br>52 51 50 49 44 43 42 41 39 37 36 34<br>73 32 29 28 27 26 19 18<br>16 15 14 13 12 11 10 3 |
| SALEABLE | NOT APPLICABLE | 34566-6323 | 9 | B | ST GRY | 71 70 69 64 63 60 59 58 57 56 55 54 53<br>52 51 50 49 45 44 43 42 41 39 37 36 34<br>73 32 30 28 26 19 18<br>16 15 14 12 10 3 |
| SALEABLE | NOT APPLICABLE | 34566-6333 | 9 | C | BLUE | 72 70 68 67 66 63 62 59 57 55 53<br>52 51 48 47 46 44 40 39 34 33<br>73 32 30 27 26 25 22 21 19 18<br>15 14 10 9 6 5 4 3 |
| SALEABLE | NOT APPLICABLE | 34566-6343 | 9 | A | BLACK | 70 69 63 62 61 60 58 57 56 55 54 53<br>52 51 50 49 44 43 42 41 40 39 37 36 34<br>73 32 29 28 27 26 19 18 17<br>16 15 14 13 12 11 10 3 2 1 |
| SALEABLE | NOT APPLICABLE | 34566-6353 | 9 | C | BLUE | 72 70 68 66 63 62 59 58 57 56 55 53<br>52 51 48 47 46 44 40 39 34 33<br>73 32 30 27 26 25 23 22 21 20 17<br>15 14 13 10 9 7 6 5 4 1 |
| SALEABLE | NOT APPLICABLE | 34566-6363 | 9 | B | ST GRY | 72 70 68 66 60 59 55 54 53<br>52 50 48 46 40 39 35 34 33<br>73 32 31 30 29 28 27 26 25 24 23 19 18 17<br>16 10 8 7 2 1 |
| SALEABLE | NOT APPLICABLE | 34566-6373 | 9 | A | BLACK | 72 71 70 69 67 64 63 60 59 58 57 56 55 54 53<br>52 51 50 49 47 45 44 43 42 41 40 39 37 36 34<br>73 32 30 28 26 23 21 19 18 17<br>16 15 14 12 10 8 5 3 2 1 |
| SALEABLE | NOT APPLICABLE | 34566-6383 | 9 | A | BLACK | 72 71 70 69 68 66 65 64 63 61 60 57 56 54 53<br>52 51 50 49 48 46 45 44 43 42 41 40 39 38 37 36 34 33<br>73 32 31 30 29 28 23 22 21<br>15 14 13 12 9 7 6 5 2 1 |
| SALEABLE | NOT APPLICABLE | 34566-6393 | 9 | C | BLUE | 71 70 69 67 66 65 64 62 61 60 58 57 55 54<br>52 51 50 49 48 47 46 45 44 42 41 38 37 35 34 33<br>73 32 28 27 26 25 19 18 17<br>16 15 14 13 12 11 10 9 |
| SALEABLE | NOT APPLICABLE | 34566-6413 | 9 | B | ST GRY | 72 68 67 63 62 61 60 59 55<br>52 48 47 46 44 43 41 40 38 37 36 35<br>73 30 27 20 19 18 17<br>16 15 14 11 8 4 1 |
| SALEABLE | NOT APPLICABLE | 34566-6423 | 9 | C | BLUE | 72 71 70 69 67 66 65 64 56 54<br>52 51 50 49 47 46 45 44 39 38 34<br>73 31 30 29 28 26 25 23 22 21 17<br>16 15 14 13 12 9 7 6 5 |
| SALEABLE | NOT APPLICABLE | 34566-6433 | 9 | A | BLACK | 72 70 67 63 60 59 58 57 56 55<br>52 51 48 47 46 43 42 40 39 38 37 36 35<br>73 28 27 22 21 18 17<br>12 11 9 7 2 1 |

# MX123 52/66/73/80-WAY RECEPTACLE ASSY SEALED PIN OUT SHEET

| STATUS | GM PART # | HRNS CONN ASSY | | | TPA | GROMMET CAP |
|---|---|---|---|---|---|---|
| | | MATERIAL/PART NUMBER | WIRE DRESS OPTION | KEY OPTION Fp | COLOR OPTION Fp | NUMBERS INDICATE CAVITIES OPEN FOR CIRCUITS Fp |
| SALEABLE | NOT APPLICABLE | 34566-6443 | 9 | B | ST GRY | 72 71 70 69 68 67 66 65 64 63 61 60 57 56 55<br>52 51 50 49 48 47 46 45 44 43 41 40 38 37 36 35 34 33<br>73 32 31 30 29 28 26 25 24 23 22 21 20 19 18 17<br>16 15 14 13 12 11 9 8 7 6 5 4 3 2 1 |
| SALEABLE | NOT APPLICABLE | 34566-6453 | 0 | C | BLUE | 71 70 69 67 65 64 62 61 60 57 54<br>52 51 50 49 48 47 46 45 44 42 41 37 34 33<br>73 32 28 27 26 25 18 17<br>16 15 14 13 12 11 10 9 8 7 |
| SALEABLE | NOT APPLICABLE | 34566-6463 | 0 | B | ST GRY | 72 68 67 62 61 55<br>52 48 47 46 43 40<br>73 30 20 19 18<br>16 15 14 8 4 2 |
| SALEABLE | NOT APPLICABLE | 34566-6473 | 9 | C | BLUE | 70 69 67 66 64 62 60 57 55 54<br>52 51 50 48 46 45 44 42 37 35 34 33<br>73 32 28 27 26 19 18 17<br>16 15 14 13 12 11 10 9 8 7 |
| SALEABLE | NOT APPLICABLE | 34566-6483 | 9 | A | BLACK | 72 71 70 69 68 66 65 64 63 61 60 57 56 54 53<br>52 51 50 49 48 46 45 44 43 40 39 38 37 36 34 33<br>73 32 31 30 29 28 26 25 23 22 21 20<br>15 14 13 12 9 7 6 5 2 |
| SALEABLE | NOT APPLICABLE | 34566-6493 | 9 | B | ST GRY | 72 70 62 61 55<br>52 48 47 46 43 41 40<br>73 30 20 19 18<br>16 15 14 4 2 |
| SALEABLE | NOT APPLICABLE | 34566-6513 | 0 | B | ST GRY | 72 68 67 62 61 55 54<br>52 46 43 40<br>73 20 19 18 17<br>16 15 14 8 4 3 2 |
| SALEABLE | NOT APPLICABLE | 34566-6523 | 0 | B | ST GRY | 68 67 64 59 58 54<br>46 45 39 38<br>73 32 30 29 28 27 23 22 17<br>15 13 11 10 6 1 |
| SALEABLE | NOT APPLICABLE | 34566-6533 | 9 | B | ST GRY | 68 67 64<br>46 45<br>73 32 30 29 28 27 17<br>10 7 1 |
| SALEABLE | NOT APPLICABLE | 34566-6543 | 9 | A | BLACK | 72 71 70 69 68 66 65 64 63 61 60 59 58 57 56 54 53<br>52 51 50 49 48 46 45 44 43 40 39 38 37 36 34 33<br>73 32 31 30 29 28 26 25 23 22 21 20<br>15 14 13 12 9 7 6 5 4 2 |
| SALEABLE | NOT APPLICABLE | 34566-6553 | 9 | A | BLACK | 72 71 70 69 67 64 63 60 59 58 57 56 55 54 53<br>52 51 50 49 47 45 44 43 42 41 40 39 37 36 34<br>73 32 30 28 26 19 18 17<br>15 14 10 8 5 3 2 1 |
| SALEABLE | NOT APPLICABLE | 34566-6563 | 9 | C | BLUE | 72 70 68 66 63 62 59 58 57 53<br>52 51 48 47 46 44 40 39 34 33<br>73 32 30 27 26 25 23 22 21 20 17<br>15 14 13 10 9 7 6 5 4 1 |
| SALEABLE | NOT APPLICABLE | 34566-6573 | 9 | A | BLACK | 72 71 70 69 67 64 63 60 59 58 57 56 55 54 53<br>52 51 50 49 47 45 44 43 42 41 40 39 37 36 34<br>73 32 30 28 26 23 21 19 18<br>16 15 14 12 10 8 5 3 |
| SALEABLE | NOT APPLICABLE | 34566-6583 | 9 | A | BLACK | 70 69 63 62 61 60 58 57 56 55 54 53<br>52 51 50 49 44 43 42 41 40 39 37 36 34<br>73 32 29 28 27 26 19 18<br>16 15 14 13 12 11 10 3 |
| SALEABLE | NOT APPLICABLE | 34566-6593 | 0 | C | BLUE | 69 67 64 62 60 57 55 54<br>52 51 50 48 46 45 44 42 37 35 34 33<br>73 32 28 27 26 20 19 18 17<br>16 15 14 13 12 11 10 9 |

molex

# MX123 52/66/73/80-WAY RECEPTACLE ASSY SEALED PIN OUT SHEET

| STATUS | GM PART # | HRNS CONN ASSY | | | TPA | GROMMET CAP |
|---|---|---|---|---|---|---|
| | | MATERIAL/PART NUMBER | WIRE DRESS OPTION | KEY OPTION Fp | COLOR OPTION Fp | NUMBERS INDICATE CAVITIES OPEN FOR CIRCUITS Fp |
| SALEABLE | NOT APPLICABLE | 34566-6613 | 0 | A | BLACK | 72 71 70 69 — — 66 — 64 63 — 61 60 — — 57 56 — 54 53<br>52 51 50 49 — — 46 45 44 43 — — 40 39 38 37 36 — 34 33<br>73 — 32 31 30 29 28 — 26 25 — 23 22 21 — — — —<br>— 16 15 14 13 12 — — 9 — 7 6 5 — — 2 1 |
| SALEABLE | NOT APPLICABLE | 34566-6623 | 9 | B | ST GRY | — — — — 68 67 — — 64 — — — — 59 58 — — — 54 —<br>— — — — — — 46 45 — — — — — 39 38 — — — — —<br>73 — 32 — 30 29 28 27 — — — 23 22 — — — — 17<br>— 15 — 13 — 11 10 — — — 6 — — — — 1 |
| SALEABLE | NOT APPLICABLE | 34566-6633 | 9 | C | BLUE | — — — 69 — 67 66 — 64 — 62 — 60 — — 57 — — 54 —<br>52 51 50 — 48 — 46 45 44 — 42 — — — — 37 — — 34 33<br>73 — — — — 28 27 26 — — — — — — — — —<br>— 16 15 14 13 12 11 10 9 8 7 — — — — — — |
| SALEABLE | NOT APPLICABLE | 34566-6643 | 9 | C | BLUE | — 71 — — 68 67 — 65 64 63 — 61 60 — 58 57 — — 54 —<br>52 51 50 — 48 — — 45 — 43 — 41 — — 38 37 — — 34 33<br>73 — — — — 28 27 — 25 — — — — — — 18 —<br>— 16 15 14 13 12 11 10 9 8 7 — — — — — — |
| SALEABLE | NOT APPLICABLE | 34566-6653 | 9 | B | ST GRY | 72 — — — 68 — — — — — 62 61 60 59 — — — 55 — —<br>52 — — — 48 47 46 — 44 43 — 41 40 — 38 37 36 35 — —<br>73 — — — — — 30 — — — — — — — — 20 19 18 —<br>— 16 — 14 — — — — — 8 — — 5 4 — — — 1 |
| SALEABLE | NOT APPLICABLE | 34566-6663 | 9 | A | BLACK | 72 71 70 69 68 — 66 65 64 63 — — 60 — — 57 56 — 54 —<br>52 51 50 49 48 — 46 45 44 43 42 — 40 39 38 37 36 — 34 —<br>73 — 32 31 30 29 28 — 26 25 — 23 22 21 20 — — — —<br>— — 15 14 13 12 — — 9 — 7 6 5 4 — 2 — |
| SALEABLE | NOT APPLICABLE | 34566-6673 | 9 | B | ST GRY | 72 71 70 69 68 67 66 65 64 63 — 61 60 59 — 57 56 55 — —<br>52 51 50 49 48 47 46 45 44 43 — 41 40 39 38 37 36 35 34 33<br>73 — 32 31 30 29 28 — 26 — 24 23 22 21 20 19 18 17<br>— 16 15 14 13 12 11 — 9 8 7 6 5 4 3 2 1 |
| SALEABLE | NOT APPLICABLE | 34566-6683 | 9 | A | BLACK | 72 — 70 — — 67 — — — 63 — — 60 59 58 57 — — — —<br>52 — — — 48 47 46 — — 43 42 — 40 39 38 37 — — — —<br>73 — 32 31 30 29 28 27 — — — — 22 21 — — — —<br>— 16 15 14 13 12 11 — 9 — — — 6 — — — 2 1 |
| SALEABLE | NOT APPLICABLE | 34566-6693 | 9 | C | BLUE | 72 71 70 69 — 67 66 65 64 — — — — — — — 56 — 54 —<br>52 51 50 49 — 47 46 45 44 — — — — 39 38 — — — 34 —<br>73 — — 31 30 29 28 — 26 25 24 23 22 21 — — — 17<br>— 16 15 14 13 12 — — 9 8 7 6 5 — — — — |
| SALEABLE | TBD | 34822-0063 | 9 | A | BLACK | — 63 62 61 60 59 — — — — 54 53 — 51 — 49 66<br>— 47 — — — — — — — — 38 37 — 35 — 33<br>65 — — — — — — — 28 — — 25 — — 22 21 20 19 18 17<br>— — 15 14 13 — — — — 8 7 — — — 3 2 1 |
| SALEABLE | NOT APPLICABLE | 34566-6713 | 9 | A | BLACK | 72 71 70 69 68 — 66 65 64 63 — 61 60 — — 57 56 — 54 53<br>52 51 50 49 48 — 46 45 44 43 42 41 40 39 38 37 36 — 34 33<br>73 — 32 31 30 29 28 — 26 25 — 23 22 21 — — — — —<br>— — 15 14 13 12 — — 9 — 7 6 5 — — 2 1 |
| SALEABLE | NOT APPLICABLE | 34566-6723 | 0 | H | ST GRY | — 79 — — — — 74 73 — — — — — 67 — 65 64 63 62 61<br>— 59 — — — — — 53 52 — — — — — — — 44 43 42 41<br>— — 38 — — — — 33 — — — — — 27 — 25 — — — —<br>— — 18 — — 15 14 13 12 — 10 9 8 7 — — — — — |
| SALEABLE | NOT APPLICABLE | 34566-6733 | 0 | G | BLUE | — — 78 77 — 75 74 — 72 — 70 — — — — 64 63 — — —<br>60 — 58 57 — 55 54 — 52 51 50 49 — 47 — 45 — — — —<br>40 39 38 37 — — — 33 32 31 — — — 27 26 — — — — —<br>20 19 18 17 — — — — — — 10 9 8 — 6 — 4 3 2 1 |
| SALEABLE | NOT APPLICABLE | 34566-6743 | 9 | C | BLUE | — 71 — 69 68 67 — 65 64 63 — 61 60 — — 57 — — — —<br>52 51 50 — 48 — 46 45 — 43 — 41 — — — 37 — — 34 33<br>73 — — — — 28 27 — 25 — — — — — — — — —<br>— 16 15 14 13 12 11 10 9 8 7 — — — — — — |
| SALEABLE | NOT APPLICABLE | 34566-6753 | 9 | A | BLACK | 72 71 70 69 68 — 66 65 64 — — 61 60 — — 57 56 — 54 53<br>52 51 50 49 48 — 46 45 44 43 42 — 40 39 38 37 36 — 34 33<br>73 — 31 30 29 28 — — — — 23 22 21 20 — — — —<br>— 15 14 13 12 — — — — 7 6 5 4 — 2 — — |

# MX123 52/66/73/80-WAY RECEPTACLE ASSY SEALED PIN OUT SHEET

| STATUS | GM PART # | HRNS CONN ASSY | | | TPA | GROMMET CAP | | | | | | | | | | | | | | | | | |
|---|---|---|---|---|---|---|---|---|---|---|---|---|---|---|---|---|---|---|---|---|---|---|---|
| | | MATERIAL/PART NUMBER | WIRE DRESS OPTION | KEY OPTION Fp | COLOR OPTION Fp | NUMBERS INDICATE CAVITIES OPEN FOR CIRCUITS Fp | | | | | | | | | | | | | | | | | |
| SALEABLE | NOT APPLICABLE | 34566-6763 | 9 | B | ST GRY | 72 | | | | 68 | | | | | | 62 | 61 | | | | | 55 | | |
| | | | | | | 52 | | 50 | 49 | | | 46 | 45 | | 43 | | | 40 | | | | | 34 | |
| | | | | | | 73 | | | | | | | 29 | | | | | | | 22 | 21 | 20 | 19 | 18 | |
| | | | | | | | | | | 16 | | 14 | | | | | | 8 | | 6 | 5 | 4 | | | |
| SALEABLE | NOT APPLICABLE | 34566-6773 | 0 | C | BLUE | 72 | | 70 | | 68 | | 66 | | | | 63 | 62 | | | 59 | 58 | 57 | | | 53 |
| | | | | | | 52 | 51 | | 49 | 48 | 47 | 46 | | 44 | | 42 | | 40 | 39 | | | | 34 | 33 |
| | | | | | | 73 | | | | 32 | | 30 | | | | 26 | 25 | | | 22 | 21 | | 19 | 18 | 17 |
| | | | | | | | 15 | 14 | | | | | | | | 10 | 9 | | | 6 | 5 | 4 | | | 1 |
| SALEABLE | NOT APPLICABLE | 34566-6783 | 0 | B | ST GRY | 72 | | 70 | | 68 | | 66 | | | | | | 60 | 59 | | | | 55 | 54 | 53 |
| | | | | | | 52 | | 50 | | 48 | | 46 | | | 43 | | | 40 | 39 | | | | 35 | 34 | 33 |
| | | | | | | 73 | | | | 32 | 31 | 30 | 29 | 28 | 27 | 26 | 25 | 24 | 23 | | | | | | 17 |
| | | | | | | | | | | 16 | | | | | | 10 | | 8 | 7 | | | | | 2 | 1 |
| SALEABLE | NOT APPLICABLE | 34566-6793 | 0 | B | ST GRY | 72 | | 70 | | 68 | | 66 | | 64 | 63 | | | 60 | 59 | | | | 55 | 54 | 53 |
| | | | | | | 52 | | 50 | | 48 | | 46 | | | 43 | | | 40 | 39 | | | | 35 | 34 | 33 |
| | | | | | | 73 | | | | 32 | 31 | 30 | 29 | 28 | 27 | 26 | 25 | 24 | 23 | | | 20 | | | 17 |
| | | | | | | | | | | 16 | | | | | | 10 | | 8 | 7 | | 5 | 4 | | 2 | 1 |
| SALEABLE | NOT APPLICABLE | 34566-6813 | 9 | A | BLACK | | 71 | 70 | 69 | 68 | 67 | | 65 | 64 | 63 | 62 | 61 | 60 | | 58 | 57 | 56 | 55 | 54 | 53 |
| | | | | | | 52 | 51 | 50 | 49 | 48 | 47 | | 45 | 44 | 43 | 42 | 41 | 40 | 39 | | 37 | 36 | | 34 | |
| | | | | | | 73 | | | | 32 | | 30 | 29 | 28 | 27 | 26 | 25 | 24 | | | 21 | | | 18 | |
| | | | | | | | | | | 16 | 15 | 14 | 13 | 12 | 11 | 10 | 9 | 8 | | | 5 | | 3 | | |
| SALEABLE | NOT APPLICABLE | 34566-6823 | 9 | C | BLUE | 72 | | 70 | | 68 | 67 | 66 | | | 63 | 62 | | | 59 | | 57 | | | | 53 |
| | | | | | | 52 | 51 | | 49 | 48 | 47 | 46 | | 44 | | | 41 | 40 | 39 | | 37 | 36 | 35 | 34 | 33 |
| | | | | | | 73 | | | | 32 | | 30 | | | 27 | 26 | 25 | 24 | | 22 | 21 | 20 | | | |
| | | | | | | | 15 | 14 | 13 | | | | | | | 10 | 9 | 8 | | 6 | 5 | 4 | | 2 | |
| SALEABLE | NOT APPLICABLE | 34566-6833 | 0 | A | BLACK | | | 70 | 69 | | | | | | 63 | | | 60 | 59 | 58 | 57 | 56 | 55 | 54 | 53 |
| | | | | | | 52 | 51 | | 49 | 48 | 47 | | | 44 | 43 | 42 | 41 | 40 | | | 37 | 36 | | 34 | 33 |
| | | | | | | 73 | | | | 32 | | | | 28 | | 26 | | | | | | | 19 | 18 | |
| | | | | | | | 16 | 15 | | | | | | 12 | | 10 | | | | | | | 3 | | |
| SALEABLE | NOT APPLICABLE | 34566-6843 | 0 | A | BLACK | 72 | 71 | 70 | 69 | 68 | | 66 | 65 | 64 | 63 | | 61 | 60 | | | 57 | 56 | | 54 | 53 |
| | | | | | | 52 | 51 | 50 | 49 | 48 | | 46 | 45 | 44 | 43 | | | 40 | 39 | 38 | 37 | 36 | | 34 | 33 |
| | | | | | | 73 | | | | 32 | 31 | 30 | 29 | 28 | | 26 | 25 | | 23 | 22 | 21 | 20 | | | 17 |
| | | | | | | | 15 | 14 | 13 | 12 | | | | | | | 9 | | 7 | 6 | 5 | 4 | | 2 | |
| SALEABLE | NOT APPLICABLE | 34566-6853 | 0 | C | BLUE | | | | 69 | | 67 | 66 | | 64 | | 62 | 61 | 60 | | | 57 | | 55 | 54 | |
| | | | | | | 52 | 51 | 50 | 49 | 48 | | 46 | 45 | 44 | | 42 | 41 | | | | 37 | | 35 | 34 | 33 |
| | | | | | | 73 | | | | 32 | | | | 28 | 27 | 26 | 25 | | | | | | 19 | 18 | 17 |
| | | | | | | | | | | 16 | 15 | 14 | 13 | 12 | 11 | 10 | 9 | 8 | 7 | | | | | | |
| SALEABLE | NOT APPLICABLE | 34566-6863 | 0 | A | BLACK | 72 | 71 | 70 | 69 | 68 | | 66 | 65 | 64 | 63 | | 61 | 60 | | | 57 | 56 | | 54 | 53 |
| | | | | | | 52 | 51 | 50 | 49 | 48 | | 46 | 45 | 44 | 43 | 42 | | 40 | 39 | 38 | 37 | 36 | | 34 | 33 |
| | | | | | | 73 | | | | 32 | 31 | 30 | 29 | 28 | | 26 | 25 | | 23 | 22 | 21 | 20 | | | |
| | | | | | | | 15 | 14 | 13 | 12 | | | | | | | 9 | | 7 | 6 | 5 | 4 | | 2 | |
| SALEABLE | NOT APPLICABLE | 34566-6873 | 9 | B | ST GRY | 72 | | | | 68 | 67 | | | | 63 | 62 | 61 | 60 | 59 | | | | 55 | | 53 |
| | | | | | | 52 | | | | 48 | 47 | 46 | | 44 | 43 | | 41 | 40 | | 38 | 37 | 36 | 35 | | |
| | | | | | | 73 | | | | | | 30 | | | 27 | | | | | | | 20 | 19 | 18 | 17 |
| | | | | | | | 16 | 15 | 14 | | | | | | 11 | | | 8 | | | | 4 | | | 1 |
| SALEABLE | NOT APPLICABLE | 34566-6883 | 9 | A | BLACK | 72 | | 70 | | | 67 | | | | 63 | | | 60 | 59 | 58 | 57 | 56 | 55 | | |
| | | | | | | 52 | 51 | | | 48 | 47 | 46 | | | 43 | 42 | | 40 | 39 | 38 | 37 | 36 | 35 | | |
| | | | | | | 73 | | | | | | | | 28 | 27 | | | | | 22 | 21 | | | 18 | 17 |
| | | | | | | | | | | | | | | 12 | 11 | | 9 | | 7 | | 5 | | | 2 | 1 |
| SALEABLE | NOT APPLICABLE | 34566-6893 | 0 | B | ST GRY | 72 | 71 | 70 | 69 | 68 | 67 | 66 | 65 | 64 | 63 | 62 | 61 | 60 | 59 | | 57 | 56 | 55 | | |
| | | | | | | 52 | 51 | 50 | 49 | 48 | 47 | 46 | 45 | 44 | 43 | | 41 | 40 | 39 | 38 | 37 | 36 | 35 | 34 | 33 |
| | | | | | | 73 | | | | 32 | 31 | 30 | 29 | 28 | | 26 | | 24 | 23 | 22 | 21 | 20 | 19 | 18 | 17 |
| | | | | | | | | | | 16 | 15 | 14 | 13 | 12 | 11 | | 9 | 8 | 7 | 6 | 5 | 4 | 3 | 2 | 1 |
| SALEABLE | NOT APPLICABLE | 34566-6913 | 9 | A | BLACK | 72 | 71 | 70 | 69 | 68 | 67 | 66 | 65 | 64 | 63 | | | 60 | 59 | 58 | 57 | 56 | 55 | 54 | |
| | | | | | | 52 | 51 | 50 | 49 | 48 | 47 | 46 | 45 | 44 | 43 | 42 | | 40 | 39 | 38 | 37 | 36 | 35 | 34 | |
| | | | | | | 73 | | | | 32 | 31 | 30 | 29 | 28 | 27 | 26 | 25 | | 23 | 22 | 21 | 20 | | 18 | 17 |
| | | | | | | | 16 | 15 | 14 | 13 | 12 | 11 | | | 9 | | | | 7 | 6 | 5 | 4 | | 2 | 1 |
| SALEABLE | NOT APPLICABLE | 34566-6923 | 9 | C | BLUE | 72 | 71 | 70 | 69 | | 67 | 66 | 65 | 64 | | | 61 | 60 | | 58 | 57 | 56 | | 54 | |
| | | | | | | 52 | 51 | 50 | 49 | 48 | 47 | 46 | 45 | 44 | | | 41 | | 39 | 38 | 37 | | | 34 | 33 |
| | | | | | | 73 | | | | 32 | 31 | 30 | 29 | 28 | 27 | 26 | 25 | 24 | 23 | 22 | 21 | | | 18 | 17 |
| | | | | | | | | | | 16 | 15 | 14 | 13 | 12 | 11 | 10 | 9 | 8 | 7 | 6 | 5 | | | | |

molex

# MX123 52/66/73/80-WAY RECEPTACLE ASSY SEALED PIN OUT SHEET

| STATUS | GM PART # | HRNS CONN ASSY | | | TPA | GROMMET CAP | | | | | | | | | | | | | | | | | |
|---|---|---|---|---|---|---|---|---|---|---|---|---|---|---|---|---|---|---|---|---|---|---|---|
| | | MATERIAL/PART NUMBER | WIRE DRESS OPTION | KEY OPTION Fp | COLOR OPTION Fp | NUMBERS INDICATE CAVITIES OPEN FOR CIRCUITS Fp | | | | | | | | | | | | | | | | | |
| SALEABLE | NOT APPLICABLE | 34566-6933 | 9 | B | ST GRY | 72 | | | | 68 | 67 | | | | 63 | 62 | 61 | 60 | 59 | | | | 55 | | 53 |
| | | | | | | 52 | | | | 48 | 47 | 46 | | 44 | 43 | | 41 | 40 | | 38 | 37 | 36 | 35 | | |
| | | | | | | 73 | | | | | | 30 | | | 27 | | | | | 22 | 21 | 20 | 19 | 18 | 17 |
| | | | | | | | | | | 16 | 15 | 14 | | | 11 | | | 8 | | 6 | | 4 | | | 1 |
| SALEABLE | NOT APPLICABLE | 34566-6943 | 9 | A | BLACK | 72 | 71 | 70 | 69 | 68 | | 66 | 65 | 64 | 63 | | 61 | 60 | | | 57 | 56 | | 54 | 53 |
| | | | | | | 52 | 51 | 50 | 49 | 48 | | 46 | 45 | 44 | 43 | 42 | 41 | 40 | 39 | 38 | 37 | 36 | | 34 | 33 |
| | | | | | | 73 | | | | 32 | 31 | 30 | 29 | 28 | | | | | 23 | 22 | 21 | | | | |
| | | | | | | | | | | | 15 | 14 | 13 | 12 | | | | | 7 | 6 | 5 | | | 2 | 1 |
| SALEABLE | NOT APPLICABLE | 34566-6953 | 0 | A | BLACK | 72 | 71 | 70 | 69 | | | 66 | | 64 | 63 | | 61 | 60 | | | 57 | 56 | | 54 | 53 |
| | | | | | | 52 | 51 | 50 | 49 | | | 46 | 45 | 44 | 43 | | | 40 | 39 | 38 | 37 | 36 | | 34 | 33 |
| | | | | | | 73 | | | | 32 | 31 | 30 | 29 | 28 | | 26 | 25 | | 23 | 22 | 21 | 20 | | | |
| | | | | | | | | | | 16 | 15 | 14 | 13 | 12 | | | 9 | | 7 | 6 | 5 | 4 | | 2 | 1 |
| SALEABLE | NOT APPLICABLE | 34566-6963 | 0 | B | ST GRY | 72 | | 70 | | 68 | 67 | | | | | 62 | 61 | | | | | | 55 | | |
| | | | | | | 52 | | | | 48 | 47 | 46 | | | 43 | | | 40 | | | | | | | |
| | | | | | | 73 | | | | | | 30 | | | | | | | | | | 20 | 19 | 18 | |
| | | | | | | | | | | 16 | 15 | 14 | | | | | | 8 | | | | 4 | | 2 | |
| SALEABLE | NOT APPLICABLE | 34566-6973 | 0 | C | BLUE | | 71 | 70 | 69 | | 67 | | 65 | 64 | | 62 | 61 | 60 | | | 57 | | 55 | 54 | |
| | | | | | | 52 | 51 | 50 | 49 | 48 | 47 | 46 | 45 | 44 | | 42 | 41 | | | | 37 | | 35 | 34 | 33 |
| | | | | | | 73 | | | | 32 | | | | 28 | 27 | 26 | 25 | | | | | | 19 | 18 | 17 |
| | | | | | | | | | | 16 | 15 | 14 | 13 | 12 | 11 | 10 | 9 | 8 | 7 | | | | | | |
| SALEABLE | NOT APPLICABLE | 34566-6983 | 0 | C | BLUE | | 71 | | 69 | | 67 | | 65 | 64 | | 62 | | 60 | | | 57 | | | 54 | |
| | | | | | | 52 | 51 | 50 | | 48 | 47 | 46 | 45 | 44 | | 42 | | | | | 37 | | | 34 | 33 |
| | | | | | | 73 | | | | | | | | 28 | 27 | 26 | | | | | | | | 18 | |
| | | | | | | | | | | 16 | 15 | 14 | 13 | 12 | 11 | 10 | 9 | 8 | 7 | | | | | | |
| SALEABLE | NOT APPLICABLE | 34566-6993 | 0 | G | BLUE | | | 78 | 77 | 76 | | | | | | | | | 67 | 66 | 65 | | | | |
| | | | | | | | | | | | | | | | | | | | | | | | | | |
| | | | | | | 40 | 39 | 38 | 37 | 36 | 35 | 34 | 33 | 32 | | | 29 | 28 | | | 25 | | | | 21 |
| | | | | | | 20 | 19 | 18 | 17 | 16 | 15 | 14 | 13 | 12 | | | | | | | | | 3 | | 1 |
| SALEABLE | NOT APPLICABLE | 34566-7013 | 9 | A | BLACK | | 71 | 70 | 69 | | | | | 64 | 63 | 62 | 61 | 60 | 59 | 58 | 57 | 56 | 55 | 54 | 53 |
| | | | | | | 52 | 51 | 50 | 49 | | | | 45 | 44 | 43 | 42 | 41 | | 39 | | 37 | 36 | | 34 | |
| | | | | | | 73 | | | | 32 | | | 29 | 28 | 27 | 26 | | | | | | | 19 | 18 | |
| | | | | | | | | | | 16 | 15 | 14 | 13 | 12 | 11 | 10 | | | | | | | 3 | | |
| SALEABLE | NOT APPLICABLE | 34566-7023 | 0 | A | BLACK | 72 | 71 | 70 | 69 | 68 | | 66 | 65 | 64 | | | 61 | 60 | | | 57 | 56 | | 54 | 53 |
| | | | | | | 52 | 51 | 50 | 49 | 48 | | 46 | 45 | 44 | 43 | | | 40 | 39 | 38 | 37 | 36 | | 34 | 33 |
| | | | | | | 73 | | | | | 31 | 30 | 29 | 28 | | 26 | 25 | | 23 | 22 | 21 | 20 | | | |
| | | | | | | | | | | | 15 | 14 | 13 | 12 | | | 9 | | 7 | 6 | 5 | 4 | | 2 | |
| SALEABLE | NOT APPLICABLE | 34566-7033 | 0 | A | BLACK | | | 70 | 69 | | | | 65 | | 63 | 62 | 61 | 60 | | 58 | 57 | 56 | 55 | 54 | 53 |
| | | | | | | 52 | 51 | | 49 | | | | | 44 | 43 | 42 | 41 | | | | 37 | 36 | | 34 | |
| | | | | | | 73 | | | | 32 | | | 29 | 28 | 27 | 26 | | | | | 21 | | 19 | 18 | |
| | | | | | | | | | | 16 | 15 | | 13 | 12 | 11 | 10 | | 8 | | | 5 | | 3 | | |
| SALEABLE | NOT APPLICABLE | 34566-7043 | 0 | B | ST GRY | 72 | | | | 68 | 67 | | | | 63 | 62 | 61 | 60 | 59 | | | | 55 | | |
| | | | | | | 52 | | | | | | 46 | | | 43 | | 41 | 40 | | | | | | | |
| | | | | | | 73 | | | | | | | | | 27 | | | | | | | 20 | 19 | 18 | |
| | | | | | | | | | | 16 | | 14 | | | 11 | | | 8 | | | | 4 | | | |
| SALEABLE | NOT APPLICABLE | 34566-7053 | 0 | C | BLUE | | 71 | | 69 | | 67 | | 65 | 64 | | 62 | 61 | 60 | | | 57 | | | 54 | |
| | | | | | | 52 | 51 | 50 | 49 | 48 | 47 | 46 | 45 | 44 | | 42 | 41 | | | | 37 | | | 34 | 33 |
| | | | | | | 73 | | | | | | | | 28 | 27 | 26 | 25 | | | | | | | | |
| | | | | | | | | | | 16 | 15 | 14 | 13 | 12 | 11 | 10 | 9 | 8 | 7 | | | | | | |
| SALEABLE | NOT APPLICABLE | 34566-7063 | 0 | C | BLUE | 72 | | 70 | | 68 | 67 | 66 | | | 63 | 62 | | | 59 | | 57 | | | | 53 |
| | | | | | | 52 | 51 | | | 48 | 47 | 46 | | 44 | | | | 40 | 39 | | | | | 34 | 33 |
| | | | | | | 73 | | | | 32 | | 30 | | | | 26 | 25 | | | 22 | 21 | | | | |
| | | | | | | | | | | | 15 | 14 | 13 | | | 10 | 9 | | | 6 | 5 | 4 | | | |
| SALEABLE | NOT APPLICABLE | 34566-7073 | 9 | F | NATURAL | | | | 69 | 68 | | | | | | | | | | | 58 | 57 | | | |
| | | | | | | | | | | | | | | | 43 | 42 | | | | | 38 | 37 | | | 33 |
| | | | | | | 73 | | | | | | 30 | | | | | | | | | | | 19 | 18 | 17 |
| | | | | | | | | | | | | | | | | | | | | | | | 3 | 2 | 1 |
| SALEABLE | NOT APPLICABLE | 34566-7083 | 9 | B | ST GRY | | | | | | | | | | | | | | | | | | | | |
| | | | | | | | | | | | | | | | | | | | | | | | | | |
| | | | | | | 73 | | | | | | | | | | | | | | | | | | | |
| | | | | | | | | | | 16 | 15 | 14 | 13 | 12 | 11 | 10 | | 8 | 7 | | | | 3 | 2 | 1 |

molex

# MX123 52/66/73/80-WAY RECEPTACLE ASSY SEALED PIN OUT SHEET

| STATUS | GM PART # | HRNS CONN ASSY | | | TPA | GROMMET CAP |
|---|---|---|---|---|---|---|
| | | MATERIAL/PART NUMBER | WIRE DRESS OPTION | KEY OPTION Fp | COLOR OPTION Fp | NUMBERS INDICATE CAVITIES OPEN FOR CIRCUITS Fp |
| SALEABLE | NOT APPLICABLE | 34566-7093 | 9 | B | ST GRY | 72 71 70 69 68 67 66 65 64 63 59 53<br>52 51 50 49 48 47 46 45 44 43 39 34 33<br>73 32 31 30 29 28 27 26 25 24 23 17<br>16 15 14 13 12 11 10 8 7 3 2 1 |
| SALEABLE | NOT APPLICABLE | 34566-7113 | 9 | G | BLUE | 80 79 78 76 71 67<br>60 59 58 57 54 51 50 49 48 47 44 41<br>40 39 37 33 32 30 29 28 27 25 24<br>20 19 18 12 11 9 8 5 3 2 |
| SALEABLE | NOT APPLICABLE | 34566-7123 | 9 | G | BLUE | 80 79 78 71 67<br>60 59 58 57 54 51 50 49 48 47 44 41<br>40 39 33 32 30 29 28 27 25 24<br>20 19 18 12 11 9 8 5 3 2 |
| SALEABLE | NOT APPLICABLE | 34566-7133 | 9 | B | ST GRY | 58 54 53<br>42<br>73 27 25<br>10 |
| SALEABLE | NOT APPLICABLE | 34566-7143 | 0 | A | BLACK | 70 69 63 60 59 58 57 56 55 54 53<br>52 51 49 48 47 44 43 42 41 37 36 34 33<br>73 32 28 26 19 18<br>16 15 12 10 3 |
| SALEABLE | NOT APPLICABLE | 34566-7153 | 0 | C | BLUE | 72 70 68 66 63 62 59 58 57 53<br>52 51 49 48 47 46 44 42 40 39 37 36 34 33<br>73 32 30 26 25 24 22 21 19 18 17<br>15 14 10 9 8 6 5 4 2 1 |
| SALEABLE | NOT APPLICABLE | 34566-7163 | 0 | A | BLACK | 72 70 69 68 67 61 60 56 55 54 53<br>52 50 49 48 47 45 44 43 41 40 35 34 33<br>73 29 28 25 24 20 19 18 17<br>16 15 11 9 8 7 6 5 4 3 2 1 |
| SALEABLE | NOT APPLICABLE | 34566-7173 | 0 | B | ST GRY | 68 67 66 65 64 63 58 55<br>46 45 43 38 34<br>73 32 30 29 28 27 22 17<br>16 10 |
| SALEABLE | NOT APPLICABLE | 34566-7183 | 0 | B | ST GRY | 72 71 70 69 68 67 66 65 64 63 62 61 60 59 58 57 56 55 54 53<br>52 51 50 49 48 47 46 45 44 43 42 41 40 39 38 37 36 35 34 33<br>73 32 31 30 29 28 27 26 25 24 22 21 20 19 18 17<br>16 15 14 13 12 11 10 9 8 7 6 5 4 3 2 1 |
| SALEABLE | NOT APPLICABLE | 34566-7193 | 0 | A | BLACK | 72 70 69 63 62 61 60 58 57 56 55 54 53<br>52 51 49 44 43 42 41 37 36 34<br>73 32 29 28 27 26 19 18 17<br>16 15 13 12 11 10 3 2 1 |
| SALEABLE | NOT APPLICABLE | 34566-7213 | 0 | A | BLACK | 70 69 63 58 56 54<br>52 51 49 47 44 43 42 41 39 36 34<br>73 32 28 26 19 18 17<br>16 12 10 3 2 1 |
| SALEABLE | NOT APPLICABLE | 34566-7223 | 0 | C | BLUE | 72 70 68 66 63 62 59 57 53<br>52 51 48 47 46 44 42 40 39 37 36 34 33<br>73 32 30 26 25 24 22 21 20<br>15 14 13 10 9 8 6 5 4 2 |
| SALEABLE | NOT APPLICABLE | 34566-7233 | 9 | A | BLACK | 72 62 61 57 56 55 54<br>52 51 46 45 43 40 37 35 34<br>73 32 30 29 25 20<br>16 15 13 11 10 9 4 |
| SALEABLE | NOT APPLICABLE | 34566-7243 | 9 | A | BLACK | 72 62 61 58 57 56 55 54<br>52 51 48 46 45 43 41 40 37 35 34<br>73 32 30 29 25 20<br>16 15 13 11 10 9 4 3 |
| SALEABLE | TBD | 34822-0073 | 0 | A | BLACK | 63 62 61 60 59 54 53 51 49 66<br>47 38 37 35 33<br>65 28 25 22 21 20 19 18 17<br>15 14 13 8 7 3 2 1 |

# MX123 52/66/73/80-WAY RECEPTACLE ASSY SEALED PIN OUT SHEET

| STATUS | GM PART # | HRNS CONN ASSY | | | TPA | GROMMET CAP |
|---|---|---|---|---|---|---|
| | | MATERIAL/PART NUMBER | WIRE DRESS OPTION | KEY OPTION Fp | COLOR OPTION Fp | NUMBERS INDICATE CAVITIES OPEN FOR CIRCUITS Fp |
| SALEABLE | TBD | 34822-0083 | 9 | A | BLACK | 63 62 61 60 59 54 53 51 49 66<br>47 39 38 37 35 33<br>65 28 25 22 21 20 19 18 17<br>15 14 13 8 7 3 2 1 |
| SALEABLE | NOT APPLICABLE | 34566-7253 | 0 | B | ST GRY | 72 62 61<br>52 48 47 46 44 43 41 40<br>73 30 20 19 18<br>16 14 4 |
| SALEABLE | NOT APPLICABLE | 34566-7263 | 0 | C | BLUE | 69 67 66 64 62 60 57 54<br>52 51 50 48 46 45 44 42 37 34 33<br>73 28 27 26 18<br>16 15 14 13 12 11 10 9 8 7 |
| SALEABLE | NOT APPLICABLE | 34566-7273 | 0 | C | BLUE | 69 67 66 64 62 60 57 55 54<br>52 51 50 48 46 45 44 42 37 35 34 33<br>73 32 28 27 26 19 18 17<br>16 15 14 13 12 11 10 9 8 7 |
| SALEABLE | NOT APPLICABLE | 34566-7283 | 0 | C | BLUE | 69 67 66 64 61 60 57 54<br>52 51 50 49 48 46 45 44 41 37 34 33<br>73 28 27 25 18<br>16 15 14 13 12 11 10 9 8 7 |
| SALEABLE | NOT APPLICABLE | 34566-7293 | 9 | A | BLACK | 72 71 70 69 68 67 66 65 64 63 59 53<br>52 51 50 49 48 47 46 45 44 43 39 34 33<br>73 32 31 30 29 28 27 26 25 24 23 17<br>16 15 14 13 12 11 10 8 7 3 2 1 |
| SALEABLE | NOT APPLICABLE | 34566-7313 | 0 | B | ST GRY | 72 67 62 61 55<br>52 48 47 46 43 40<br>73 30 22 21 20 19 18<br>16 14 6 4 |
| SALEABLE | NOT APPLICABLE | 34566-7333 | 9 | B | ST GRY | 72 71 70 69 68 67 66 65 64 63 62 61 60 59 57 56 55<br>52 51 50 49 48 47 46 45 44 43 41 40 39 38 37 36 35 34 33<br>73 32 31 30 29 28 26 24 23 22 21 20 19 18 17<br>16 15 14 13 12 9 8 7 6 5 4 3 2 1 |
| SALEABLE | NOT APPLICABLE | 34566-7343 | 9 | B | ST GRY | 68 67 64 63 59 58 55 54<br>46 45 44 43 39 38 35<br>73 32 30 29 28 27 23 22 19 17<br>15 13 12 10 9 6 4 1 |
| SALEABLE | NOT APPLICABLE | 34566-7353 | 9 | C | BLUE | 69 67 66 64 62 60 57 55 54<br>52 51 50 48 47 46 45 44 42 37 35 34 33<br>73 32 28 27 26 19 18 17<br>16 15 14 13 12 11 10 9 8 7 |
| SALEABLE | NOT APPLICABLE | 34566-7363 | 0 | B | ST GRY | 72 70 68 62 61 60 59 55<br>52 46 44 43 41 40<br>73 20 19 18 17<br>16 15 14 8 4 |
| SALEABLE | NOT APPLICABLE | 34566-7373 | 0 | A | BLACK | 72 71 70 69 68 66 65 64 61 60 57 56 54 53<br>52 51 50 49 48 46 45 44 43 42 40 39 38 37 36 34 33<br>73 31 30 29 28 26 25 23 22 21 20<br>15 14 13 12 9 7 6 5 4 2 |
| SALEABLE | NOT APPLICABLE | 34566-7383 | 0 | C | BLUE | 71 70 67 66 65 64 61 60 57 54<br>52 51 50 49 48 47 45 44 41 37 34 33<br>73 32 28 27 25 17<br>16 15 14 13 12 11 10 9 8 7 |
| SALEABLE | NOT APPLICABLE | 34566-7393 | 0 | B | ST GRY | 72 62 61 55<br>52 48 47 46 44 43 40<br>73 20 19 18<br>16 15 14 4 |
| SALEABLE | NOT APPLICABLE | 34566-7413 | 0 | A | BLACK | 72 71 70 69 68 66 65 64 63 61 60 57 56 54 53<br>51 50 49 48 46 45 44 43 42 40 39 38 37 36 34 33<br>73 32 31 30 29 28 26 25 23 22 21 20<br>15 14 13 12 9 7 6 5 4 2 |

# MX123 52/66/73/80-WAY RECEPTACLE ASSY SEALED PIN OUT SHEET

| STATUS | GM PART # | HRNS CONN ASSY | | | TPA | GROMMET CAP |
|---|---|---|---|---|---|---|
| | | MATERIAL/PART NUMBER | WIRE DRESS OPTION | KEY OPTION Fp | COLOR OPTION Fp | NUMBERS INDICATE CAVITIES OPEN FOR CIRCUITS Fp |
| SALEABLE | NOT APPLICABLE | 34566-7423 | 0 | C | BLUE | 73: 70 69 67 64 61 60 57 54 / 52 51 50 49 48 47 46 45 44 41 37 34 33 / 32 28 27 25 18 17 / 16 15 14 13 12 11 10 9 8 7 |
| SALEABLE | NOT APPLICABLE | 34566-7433 | 0 | B | ST GRY | 73: 72 68 62 61 60 59 55 / 52 48 47 46 44 43 41 40 38 37 36 35 / 30 20 19 18 17 / 16 15 14 8 4 1 |
| SALEABLE | NOT APPLICABLE | 34566-7443 | 0 | A | BLACK | 73: 72 71 70 69 68 66 65 64 63 60 57 56 54 / 52 51 50 49 48 46 45 44 43 42 40 39 38 37 36 34 / 31 30 29 28 26 25 23 22 21 20 / 15 14 13 12 9 7 6 5 4 2 |
| SALEABLE | NOT APPLICABLE | 34566-7453 | 0 | C | BLUE | 73: 71 70 67 66 65 64 61 60 58 57 54 / 52 51 50 49 48 47 45 44 41 38 37 34 33 / 32 28 27 25 18 17 / 16 15 14 13 12 11 10 9 8 7 |
| SALEABLE | NOT APPLICABLE | 34566-7463 | 0 | B | ST GRY | 73: 72 68 62 61 55 / 52 48 47 46 43 40 / 30 22 21 20 19 18 / 16 15 14 8 6 4 2 |
| SALEABLE | NOT APPLICABLE | 34566-7473 | 0 | B | ST GRY | 73: 72 68 67 63 62 61 55 / 52 48 47 46 43 40 / 30 27 22 21 20 19 18 / 16 14 11 8 6 4 |
| SALEABLE | NOT APPLICABLE | 34566-7483 | 0 | B | ST GRY | 73: 72 68 62 61 55 / 52 48 47 46 43 40 / 30 22 21 20 19 18 17 / 16 15 14 8 6 4 2 |
| SALEABLE | NOT APPLICABLE | 34566-7493 | 0 | C | BLUE | 73: 69 67 64 62 60 57 55 54 / 52 51 50 48 47 46 45 44 42 37 35 34 33 / 32 28 27 26 19 18 17 / 16 15 14 13 12 11 10 9 8 7 |
| SALEABLE | NOT APPLICABLE | 34566-7513 | 9 | A | BLACK | 73: 72 71 70 69 68 66 65 64 63 61 60 57 56 54 53 / 52 51 50 49 48 46 45 44 43 40 39 38 37 36 34 33 / 32 31 30 29 28 23 22 21 20 / 15 14 13 12 7 6 5 4 2 |
| SALEABLE | NOT APPLICABLE | 34566-7523 | 0 | A | BLACK | 73: 72 64 62 61 59 58 57 56 55 54 / 52 51 48 47 46 45 43 41 40 37 33 / 32 30 29 27 26 25 24 20 / 16 15 13 11 10 9 4 |
| SALEABLE | NOT APPLICABLE | 34566-7533 | 0 | G | BLUE | 73: 80 79 78 71 70 67 / 60 59 58 57 54 51 50 49 48 47 45 44 42 41 / 40 39 37 36 34 33 32 30 29 28 27 25 24 23 22 21 / 20 19 18 13 12 11 9 8 5 3 2 1 |
| ~~SALEABLE~~ | ~~NOT APPLICABLE~~ | 34566-7543 SAME AS P/N 34566-1553 | 0 | A | BLACK | 73: |
| ~~SALEABLE~~ | ~~NOT APPLICABLE~~ | 34566-7553 SAME AS P/N 34566-1983 | 0 | B | ST GRY | 73: |
| ~~SALEABLE~~ | ~~NOT APPLICABLE~~ | 34566-7563 SAME AS P/N 34566-1993 | 0 | C | BLUE | 73: |
| SALEABLE | NOT APPLICABLE | 34566-7573 | 0 | B | ST GRY | 73: 72 70 68 62 61 55 / 52 48 47 46 43 40 / 30 22 21 20 19 18 17 / 16 15 14 8 6 4 2 |

# MX123 52/66/73/80-WAY RECEPTACLE ASSY SEALED PIN OUT SHEET

| STATUS | GM PART # | HRNS CONN ASSY | | | TPA | GROMMET CAP |
|---|---|---|---|---|---|---|
| | | MATERIAL/PART NUMBER | WIRE DRESS OPTION | KEY OPTION Fp | COLOR OPTION Fp | NUMBERS INDICATE CAVITIES OPEN FOR CIRCUITS Fp |
| SALEABLE | NOT APPLICABLE | 34566-7583 | 9 | A | BLACK | 72 70 67 63 60 58 57<br>52 48 47 46 43 42 40 39 38 37<br>73 32 31 30 29 28 27 22 21<br>16 15 14 13 12 11 9 7 2 1 |
| SALEABLE | NOT APPLICABLE | 34566-7593 | 9 | A | BLACK | 72 70 69 68 64 62 61 59 58 57 56 55 54 53<br>52 51 50 48 47 46 45 43 41 40 37 35 33<br>73 32 30 29 27 26 25 24 20 19 18<br>16 15 14 13 12 11 10 9 8 5 4 3 2 1 |
| SALEABLE | TBD | 34822-0093 | 9 | A | BLACK | 63 62 61 60 59 54 53 51 49 66<br>47 38 37 35 33<br>65 28 25 22 21 20 19 18 17<br>15 14 13 8 7 3 2 1 |
| SALEABLE | TBD | 34822-0103 | 0 | A | BLACK | 63 58 57 56 55 54 53 51 49 66<br>47 41 40 38 37 35 33<br>65 28 27 26 25 22 18 17<br>14 7 4 3 2 1 |
| SALEABLE | TBD | 34822-0113 | 9 | A | BLACK | 61 60 59 58 56 55 51 49 66<br>42<br>65 17<br>10 8 2 |
| SALEABLE | NOT APPLICABLE | 34822-0123 | 9 | C | BLUE | 64 63 62 61 60 55 54 66<br>48 47 46 45 42 39 36 35<br>65 31 27 19<br>16 10 6 4 1 |
| SALEABLE | NOT APPLICABLE | 34566-7613 | 9 | H | ST GRY | 80 79 78 75 71 70 67<br>60 59 57 54 51 50 49 48 47 45 44 42 41<br>40 39 37 36 34 33 32 30 29 28 27 25 24 23 22 21<br>20 18 13 12 11 9 8 5 3 2 1 |
| SALEABLE | NOT APPLICABLE | 34566-7623 | 9 | G | BLUE | 80 79 78 75 71 70 67<br>60 59 58 57 54 51 50 49 48 47 45 44 42 41<br>40 39 37 36 34 33 32 30 29 28 27 25 24 23 22 21<br>20 19 18 13 12 11 9 8 5 3 2 1 |
| SALEABLE | TBD | 34822-0133 | 0 | C | BLUE | 64 63 62 61 60 55 54 66<br>48 47 46 45 42 39 36 35<br>65 31 27 19<br>16 10 6 4 1 |
| SALEABLE | NOT APPLICABLE | 34566-7633 | 9 | A | BLACK | 72 71 70 69 68 67 66 65 64 63 60 59 58 57 56 55 54<br>52 51 50 49 48 47 46 45 44 43 42 41 40 39 38 37 36 35 34<br>73 32 31 30 29 28 27 26 25 23 22 21 20 18 17<br>16 15 14 13 12 11 9 7 6 5 4 2 1 |
| SALEABLE | NOT APPLICABLE | 34566-7643 | 9 | B | ST GRY | 68 67 64 59 58<br>46 45 39 38<br>73 32 30 29 28 27 23 22 17<br>10 7 1 |
| SALEABLE | TBD | 34822-0143 | 0 | A | BLACK | 61 60 59 58 56 55 51 49 66<br>42<br>65 32 17<br>16 10 8 2 |
| SALEABLE | NOT APPLICABLE | 34566-7653 | 0 | B | ST GRY | 72 70 62 61 55<br>52 48 47 46 43 40<br>73 30 22 21 20 19 18<br>16 15 14 6 4 2 |
| SALEABLE | NOT APPLICABLE | 34566-7663 | 0 | B | ST GRY | 72 70 68 62 61 60 59 55<br>52 48 47 46 44 43 41 40 38 37 36 35 33<br>73 30 22 21 20 19 18 17<br>16 15 14 8 6 4 1 |
| SALEABLE | NOT APPLICABLE | 34566-7673 | 0 | C | BLUE | 71 70 69 67 66 65 64 61 60 59 58 57 54<br>52 51 50 49 48 47 46 45 44 41 39 38 37 34 33<br>73 32 28 27 25 23 18 17<br>16 15 14 13 12 11 10 9 8 7 |

molex

# MX123 52/66/73/80-WAY RECEPTACLE ASSY SEALED PIN OUT SHEET

| STATUS | GM PART # | HRNS CONN ASSY | | | TPA | GROMMET CAP |
|---|---|---|---|---|---|---|
| | | MATERIAL/PART NUMBER | WIRE DRESS OPTION | KEY OPTION Fp | COLOR OPTION Fp | NUMBERS INDICATE CAVITIES OPEN FOR CIRCUITS Fp |
| SALEABLE | NOT APPLICABLE | 34566-7683 | 9 | B | ST GRY | 72 71 70 69 68 67 66 65 64 63 62 61 60 59 57 56 55<br>52 51 50 49 48 47 46 45 44 43 41 40 39 38 37 36 35 34 33<br>73 32 31 30 29 28 26 25 24 23 22 21 20 19 18 17<br>16 15 14 13 12 11 9 8 7 6 5 4 3 2 1 |
| SALEABLE | NOT APPLICABLE | 34566-7693 | 9 | A | BLACK | 72 64 62 61 57 56 55 54<br>52 51 46 45 43 40 37 35 34<br>73 32 30 29 27 25 20<br>16 15 13 11 10 9 4 |
| SALEABLE | NOT APPLICABLE | 34566-7713 | 9 | A | BLACK | 72 64 62 61 58 57 56 55 54<br>52 51 48 46 45 43 41 40 37 35 34<br>73 32 30 29 27 25 20<br>16 15 13 11 10 9 4 3 |
| SALEABLE | NOT APPLICABLE | 34566-7723 | 9 | A | BLACK | 72 64 62 61 57 56 55 54 53<br>52 51 46 45 43 40 37<br>73 32 30 29 27 25 20<br>16 15 13 11 10 9 4 |
| SALEABLE | NOT APPLICABLE | 34566-7733 | 9 | A | BLACK | 72 64 62 61 58 57 56 55 54 53<br>52 51 48 46 45 43 41 40 37<br>73 32 30 29 27 25 20<br>16 15 13 11 10 9 4 3 |
| SALEABLE | NOT APPLICABLE | 34566-7743 | 0 | C | BLUE | 72 70 68 67 66 63 62 59 57 53<br>52 51 49 48 47 46 44 41 40 39 37 36 35 34 33<br>73 32 30 27 26 25 24 22 21 20<br>15 14 13 10 9 8 6 5 4 2 |
| SALEABLE | NOT APPLICABLE | 34566-7753 | 0 | A | BLACK | 71 70 69 68 67 64 63 62 61 60 59 58 57 56 55 54 53<br>52 51 50 49 45 44 43 42 41 39 38 37 36 34<br>73 32 31 29 28 27 26 25 19 18<br>16 15 14 13 12 11 10 9 8 3 |
| SALEABLE | NOT APPLICABLE | 34566-7763 | 0 | F | NATURAL | 73 |
| SALEABLE | NOT APPLICABLE | 34566-7773 | 0 | B | ST GRY | 72 70 67 63 62 61 60 59<br>52 46 43 41 40<br>73 27 22 21 20 19 18<br>16 14 11 6 4 |
| SALEABLE | TBD | 34822-0153 | 9 | A | BLACK | 63 62 61 60 59 54 53 51 49 66<br>47 38 37 35 33<br>65 28 25 22 21 20 19 18 17<br>15 14 13 8 7 3 2 1 |
| SALEABLE | NOT APPLICABLE | 34566-7783 | 0 | A | BLACK | 72 71 70 69 68 66 65 64 63 60 57 56 54<br>52 51 50 49 48 46 45 44 43 42 41 40 39 38 37 36 34<br>73 32 31 30 29 28 26 25 23 22 21<br>15 14 13 12 9 7 6 5 2 1 |
| SALEABLE | NOT APPLICABLE | 34566-7793 | 0 | A | BLACK | 72 70 67 66 65 63 60 59 58 57 56 55<br>52 51 49 48 47 46 45 43 42 40 39 38 37 36 35<br>73 28 27 23 22 21 18 17<br>12 11 9 2 1 |
| SALEABLE | NOT APPLICABLE | 34566-7813 | 0 | A | BLACK | 70 69 68 67 63 62 61 60 59 58 57 56 55 54 53<br>52 51 50 49 44 43 42 41 40 39 38 37 36 34<br>73 32 29 28 27 26 25 21 19 18<br>16 15 14 13 12 11 10 9 8 5 3 |
| SALEABLE | NOT APPLICABLE | 34566-7823 | 0 | B | ST GRY | 72 68 67 63 62 61 60 59<br>52 48 47 46 44 43 41 40 38 37 36 35<br>73 30 27 20 19 18<br>16 14 11 8 4 1 |
| SALEABLE | NOT APPLICABLE | 34566-7833 | 0 | B | ST GRY | 72 71 70 69 68 67 66 65 64 63 61 60 59 57 56 55<br>52 51 50 49 48 47 46 45 44 43 41 40 39 38 37 36 35 34 33<br>73 32 31 30 29 28 26 25 24 23 22 21 20 19 18 17<br>16 15 14 13 12 8 7 6 5 4 3 2 1 |

# MX123 52/66/73/80-WAY RECEPTACLE ASSY SEALED PIN OUT SHEET

| STATUS | GM PART # | HRNS CONN ASSY | | | TPA | GROMMET CAP | | | | | | | | | | | | | | | | | | | |
|---|---|---|---|---|---|---|---|---|---|---|---|---|---|---|---|---|---|---|---|---|---|---|---|---|---|
| | | MATERIAL/PART NUMBER | WIRE DRESS OPTION | KEY OPTION Fp | COLOR OPTION Fp | NUMBERS INDICATE CAVITIES OPEN FOR CIRCUITS Fp | | | | | | | | | | | | | | | | | | | |
| SALEABLE | NOT APPLICABLE | 34566-7843 | 9 | C | BLUE | | 71 | | | | 67 | | 65 | 64 | | 62 | 61 | 60 | | 58 | 57 | | | 54 | |
| | | | | | | 52 | 51 | 50 | 49 | 48 | 47 | | 45 | 44 | | 42 | 41 | | | 38 | 37 | | | 34 | 33 |
| | | | | | | 73 | | | | | | | | 28 | 27 | 26 | 25 | | | | | | | 18 | |
| | | | | | | | | | | 16 | 15 | 14 | 13 | 12 | 11 | 10 | 9 | | | | | | | | |
| SALEABLE | NOT APPLICABLE | 34566-7853 | 9 | C | BLUE | 72 | 71 | 70 | 69 | | 67 | 66 | | 64 | | | | | | | | | | 54 | |
| | | | | | | 52 | 51 | 50 | 49 | | 47 | 46 | | 44 | | | | | 39 | 38 | | | | | |
| | | | | | | 73 | | | | | | 30 | 29 | 28 | 27 | 26 | 25 | 24 | 23 | 22 | 21 | | | | 17 |
| | | | | | | | | | | 16 | 15 | 14 | 13 | 12 | 11 | 10 | 9 | 8 | 7 | 6 | 5 | | | | |
| SALEABLE | NOT APPLICABLE | 34566-7863 | 9 | C | BLUE | 72 | | 70 | | 68 | 67 | 66 | | | 63 | 62 | | | 59 | | 57 | | | | 53 |
| | | | | | | 52 | 51 | | | 48 | 47 | 46 | | 44 | | | | 40 | 39 | | 37 | 36 | 35 | 34 | 33 |
| | | | | | | 73 | | | | 32 | | 30 | | | 27 | 26 | 25 | 24 | | 22 | 21 | | | | |
| | | | | | | | | | | | 15 | 14 | | | | 10 | 9 | 8 | | 6 | 5 | 4 | | 2 | |
| SALEABLE | NOT APPLICABLE | 34566-7873 | 9 | A | BLACK | | 71 | | 69 | | | | 65 | 64 | | | 61 | 60 | | 58 | | 56 | 55 | 54 | |
| | | | | | | | | 50 | | | | | 45 | | 43 | 42 | | | | 38 | | | 35 | | |
| | | | | | | 73 | | | | | 31 | | 29 | 28 | | | | | 23 | | | | 19 | 18 | 17 |
| | | | | | | | | | | 16 | | | | 12 | 11 | | | | | | | | 3 | | 1 |
| SALEABLE | NOT APPLICABLE | 34566-7883 | 9 | A | BLACK | 72 | | | | 68 | 67 | 66 | 65 | | | | | | | | | | | | |
| | | | | | | | | | | 48 | 47 | | | | | | | 40 | | 38 | | | 35 | | 33 |
| | | | | | | 73 | | | | | 31 | 30 | | | | | 25 | 24 | 23 | 22 | 21 | 20 | 19 | | 17 |
| | | | | | | | | | | | | | | | | | 9 | 8 | 7 | 6 | 5 | 4 | | 2 | 1 |
| SALEABLE | NOT APPLICABLE | 34566-7893 | 9 | A | BLACK | 72 | 71 | 70 | 69 | 68 | | 66 | 65 | 64 | 63 | | 61 | 60 | | | 57 | 56 | | 54 | 53 |
| | | | | | | 52 | 51 | 50 | 49 | 48 | | 46 | 45 | 44 | 43 | 42 | | 40 | 39 | 38 | 37 | 36 | | 34 | 33 |
| | | | | | | 73 | | | | 32 | 31 | 30 | 29 | 28 | | | | | 23 | 22 | 21 | 20 | | | |
| | | | | | | | | | | | 15 | 14 | 13 | 12 | | | | | 7 | 6 | 5 | 4 | | 2 | |
| SALEABLE | TBD | 34822-0163 | 0 | A | BLACK | 64 | 63 | | | | | | | | | 54 | 53 | | 51 | | 49 | 66 | | | |
| | | | | | | | | | | | | | | | | 38 | 37 | | 35 | | 33 | | | | |
| | | | | | | 65 | | | | | | | | 28 | | | | | 23 | | 21 | 20 | 19 | 18 | 17 |
| | | | | | | | | | | | 15 | 14 | 13 | | | | | 8 | 7 | | | 4 | 3 | 2 | 1 |
| SALEABLE | NOT APPLICABLE | 34566-7913 | 9 | G | BLUE | 80 | 79 | 78 | | | 75 | | | | 71 | 70 | | | 67 | | | | | | 61 |
| | | | | | | 60 | 59 | 58 | 57 | | | 54 | | | 51 | 50 | 49 | 48 | 47 | | 45 | 44 | | 42 | 41 |
| | | | | | | 40 | 39 | | 37 | 36 | | 34 | 33 | 32 | | 30 | 29 | 28 | 27 | | 25 | 24 | 23 | 22 | 21 |
| | | | | | | 20 | 19 | 18 | | | | | 13 | 12 | 11 | | 9 | 8 | | | 5 | | 3 | 2 | 1 |
| SALEABLE | NOT APPLICABLE | 34566-7923 | 0 | C | BLUE | | 71 | 70 | | | 67 | | | 64 | | | 61 | 60 | | | 57 | | | 54 | |
| | | | | | | 52 | 51 | 50 | 49 | 48 | 47 | | 45 | 44 | | | 41 | | | | 37 | | | 34 | 33 |
| | | | | | | 73 | | | | 32 | | | | 28 | 27 | | 25 | | | | | | | 18 | 17 |
| | | | | | | | | | | 16 | 15 | 14 | 13 | 12 | 11 | 10 | 9 | 8 | 7 | | | | | | |
| SALEABLE | NOT APPLICABLE | 34566-7933 | 0 | A | BLACK | 72 | 71 | 70 | 69 | 68 | | 66 | 65 | 64 | 63 | | 61 | 60 | | | 57 | 56 | | 54 | 53 |
| | | | | | | 52 | 51 | 50 | 49 | 48 | | 46 | 45 | 44 | 43 | | | 40 | 39 | 38 | 37 | 36 | | 34 | 33 |
| | | | | | | 73 | | | | 32 | 31 | 30 | 29 | 28 | | | | | 23 | 22 | 21 | 20 | | | |
| | | | | | | | | | | | 15 | 14 | 13 | 12 | | | | | 7 | 6 | 5 | 4 | | 2 | |
| SALEABLE | NOT APPLICABLE | 34566-7943 | 0 | B | ST GRY | 72 | | | | | | | | | | 62 | 61 | 60 | 59 | | | | 55 | | |
| | | | | | | 52 | | | | 48 | 47 | 46 | | | 43 | | 41 | 40 | | 38 | 37 | 36 | 35 | | |
| | | | | | | 73 | | | | | 31 | 30 | | | | | | | | 22 | 21 | 20 | 19 | 18 | 17 |
| | | | | | | | | | | 16 | 15 | 14 | | | | | | | | 6 | | 4 | | | 1 |
| SALEABLE | NOT APPLICABLE | 34566-7953 | 0 | B | ST GRY | 72 | | | | | | | | | | 62 | 61 | 60 | 59 | | | | 55 | | |
| | | | | | | 52 | | | | 48 | 47 | 46 | | | 43 | | 41 | 40 | | 38 | 37 | 36 | 35 | | |
| | | | | | | 73 | | | | | 31 | 30 | | | | | | | | 22 | 21 | 20 | 19 | 18 | 17 |
| | | | | | | | | | | 16 | 15 | 14 | | | | | | | | 6 | | 4 | | 2 | |
| SALEABLE | NOT APPLICABLE | 34566-7963 | 9 | A | BLACK | 72 | 71 | 70 | 69 | 68 | | 66 | 65 | 64 | 63 | | 61 | 60 | | | 57 | 56 | | 54 | 53 |
| | | | | | | 52 | 51 | 50 | 49 | 48 | | 46 | 45 | 44 | 43 | 42 | | 40 | 39 | 38 | 37 | 36 | | 34 | 33 |
| | | | | | | 73 | | | | 32 | 31 | 30 | 29 | 28 | | 26 | 25 | | 23 | 22 | 21 | 20 | | | |
| | | | | | | | | | | | 15 | 14 | 13 | 12 | | | 9 | | 7 | 6 | 5 | 4 | | 2 | |
| SALEABLE | NOT APPLICABLE | 34566-7973 | 9 | B | ST GRY | 72 | | | | | | | | | | 62 | 61 | 60 | 59 | | | | 55 | | |
| | | | | | | 52 | | 50 | 49 | 48 | 47 | 46 | 45 | | 43 | | 41 | 40 | | 38 | 37 | 36 | 35 | 34 | |
| | | | | | | 73 | | | | | | 30 | 29 | | | | | | | 22 | 21 | 20 | 19 | 18 | 17 |
| | | | | | | | | | | 16 | 15 | 14 | | | | | | | | 6 | | 4 | | | 1 |
| SALEABLE | NOT APPLICABLE | 34566-7983 | 9 | B | ST GRY | 72 | | | | | | | | | | 62 | 61 | 60 | 59 | | | | 55 | | |
| | | | | | | 52 | | 50 | 49 | 48 | 47 | 46 | 45 | | 43 | | 41 | 40 | | | | | | 34 | 33 |
| | | | | | | 73 | | | | | | 30 | 29 | | | | | | | 22 | 21 | 20 | 19 | 18 | 17 |
| | | | | | | | | | | 16 | 15 | 14 | | | | | | | | 6 | | 4 | | | |

molex

# MX123 52/66/73/80-WAY RECEPTACLE ASSY SEALED PIN OUT SHEET

| STATUS | GM PART # | HRNS CONN ASSY | | | TPA | GROMMET CAP |
|---|---|---|---|---|---|---|
| | | MATERIAL/PART NUMBER | WIRE DRESS OPTION | KEY OPTION Fp | COLOR OPTION Fp | NUMBERS INDICATE CAVITIES OPEN FOR CIRCUITS Fp |
| SALEABLE | NOT APPLICABLE | 34566-7993 | 9 | C | BLUE | 70 69 67 66 64 61 60 57 54<br>52 51 50 49 48 47 46 45 44 41 37 34 33<br>73 32 28 27 25 18 17<br>16 15 14 13 12 11 10 9 8 7 |
| SALEABLE | NOT APPLICABLE | 34566-8013 | 9 | C | BLUE | 71 67 65 64 61 60 59 57 54<br>52 51 50 48 47 45 44 41 39 37 34 33<br>73 32 28 27 25 23 18<br>16 15 14 13 12 11 10 9 8 7 |
| SALEABLE | TBD | 34822-0173 | 9 | A | BLACK | 64 58 57 56 55 54 52 50 66<br>48 46 45 44 43 42 41 40 36 34<br>65 32 31 30 29 27 26 24 23<br>16 12 11 10 9 6 5 4 |
| SALEABLE | NOT APPLICABLE | 34566-8023 | 9 | C | BLUE | 72 69 68 63 62 59 56 55 53<br>46 43 42 40 39 36 35<br>73 31 30 29 26 24 23 22 21 20 19<br>8 7 6 5 4 3 2 1 |
| SALEABLE | NOT APPLICABLE | 34566-8033 | 9 | B | ST GRY | 71 70 69 67 66 65 64 63 58 57 56 54<br>51 50 49 45 42 39 34 33<br>73 32 31 29 28 27 26 25 24 23<br>13 12 11 10 9 7 5 3 2 |
| SALEABLE | NOT APPLICABLE | 34566-8043 | 9 | A | BLACK | 67 62 61 59 58 55 53<br>47 42 35 33<br>73 27 26 25 24 20 19 18 17<br>16 11 10 9 8 4 3 1 |
| SALEABLE | NOT APPLICABLE | 34566-8053 | 9 | A | BLACK | 72 68 67 66 59<br>46 40 38 35 33<br>73 31 25 23 22 21 20 19 17<br>9 8 7 6 5 4 2 1 |
| SALEABLE | NOT APPLICABLE | 34566-8063 | 9 | C | BLUE | 71 69 65 64 61 60 58 56 55 54<br>50 45 43 42 38 35<br>73 31 29 28 23 19 18 17<br>16 12 11 7 3 1 |
| SALEABLE | NOT APPLICABLE | 34566-8073 | 9 | B | ST GRY | 69 65 64 63<br>49 45 44 43<br>73 23 22 21 20 19<br>12 11 9 7 6 5 4 |
| SALEABLE | NOT APPLICABLE | 34566-8083 | 9 | B | ST GRY | 62 59 58 54 53<br>42 39<br>73 27<br>10 9 |
| SALEABLE | NOT APPLICABLE | 34566-8093 | 9 | A | BLACK | 71 69 68 66 65 64 62 61 54 53<br>50 49 45 44 41 34 33<br>73 32 31 30 29 26 25 24 23 20 19<br>16 15 14 13 10 8 6 4 3 |
| SALEABLE | NOT APPLICABLE | 34566-8113 | 9 | C | BLUE | 68 63 62 61 60 59 58 57 55 53<br>48 43 42 41 40 37 36 35 33<br>73 32 27 24 20 19 18<br>11 10 8 5 4 3 2 1 |
| SALEABLE | NOT APPLICABLE | 34566-8123 | 0 | G | BLUE | 80 79 73 72 70 69 68 67 66 65 64 62 61<br>59 53 52 46 44 42 41<br>36 35 34 25 24 23 22 21<br>19 16 15 14 |
| SALEABLE | NOT APPLICABLE | 34566-8133 | 0 | G | BLUE | 80 79 78 77 75 72 71 70 69 68 66<br>60 59 58 57 56 55 53 51 50 49 48 47 46 45 44<br>40 39 37 36 35 34 32 31 30 29 28 26 24 23 22 21<br>19 18 17 11 4 3 1 |
| SALEABLE | NOT APPLICABLE | 34566-8143 | 0 | G | BLUE | 80 79 78 77 76 75 74 73 72 70 69 68 67 66 65 64 63 62 61<br>60 59 58 57 56 55 54 53 52 51 50 48 47 46 45 44 43 42 41<br>40 39 38 37 36 35 34 33 32 31 30 29 28 27 26 25 24 23 22 21<br>20 19 18 17 16 15 14 13 12 11 10 9 8 7 6 5 4 3 2 1 |

# MX123 52/66/73/80-WAY RECEPTACLE ASSY SEALED PIN OUT SHEET

| STATUS | GM PART # | HRNS CONN ASSY | | | TPA | GROMMET CAP | | | | | | | | | | | | | | | | | | |
|---|---|---|---|---|---|---|---|---|---|---|---|---|---|---|---|---|---|---|---|---|---|---|---|---|
| | | MATERIAL/PART NUMBER | WIRE DRESS OPTION | KEY OPTION Fp | COLOR OPTION Fp | NUMBERS INDICATE CAVITIES OPEN FOR CIRCUITS Fp | | | | | | | | | | | | | | | | | | |
| SALEABLE | NOT APPLICABLE | 34566-8153 | 0 | C | BLUE | 72 | 71 | 70 | 69 | 68 | 67 | 66 | 65 | 64 | 63 | 62 | 61 | 60 | 59 | 58 | 57 | 56 | 55 | | |
| | | | | | | 52 | 51 | 50 | | | | | | | | 42 | 41 | | | | | | 35 | 34 | 33 |
| | | | | | | 73 | | | | | | | | 28 | 27 | | | | | | | | | 18 | |
| | | | | | | | | | | 16 | | 14 | 13 | | | | | | | | | | 3 | | |
| SALEABLE | NOT APPLICABLE | 34566-8163 | 9 | B | ST GRY | | | | | 68 | 67 | | | 64 | 63 | | | | 59 | 58 | | | 55 | 54 | |
| | | | | | | | | | | | 47 | 46 | 45 | 44 | 43 | | | | 39 | 38 | | | 35 | | |
| | | | | | | 73 | | | | 32 | 31 | 30 | 29 | 28 | 27 | | | | 23 | 22 | | | 19 | | 17 |
| | | | | | | | | | | | 15 | | 13 | 12 | 11 | 10 | 9 | | | 6 | | 4 | | | 1 |
| SALEABLE | NOT APPLICABLE | 34566-8173 | 0 | B | ST GRY | 72 | | 70 | | 68 | 67 | | | | 63 | 62 | 61 | 60 | 59 | | | | | | |
| | | | | | | 52 | | | | | | 46 | | | 43 | | 41 | 40 | | | | | | | |
| | | 73 | | | | | | | | | | | | | 27 | | | | | 22 | 21 | 20 | 19 | 18 | |
| | | | | | | | | | | 16 | | 14 | | | 11 | | | 8 | | 6 | | 4 | | | |
| SALEABLE | NOT APPLICABLE | 34566-8183 | 9 | H | ST GRY | | | | | | | | | | 71 | | | | | | | | | | |
| | | | | | | | | | | | | | | | | | 49 | | | | | | | | |
| | | | | | | | | | | | | | | | | | | | | | | | | | |
| | | | | | | | | | | | | | | | | | | | | | | | | | |
| SALEABLE | NOT APPLICABLE | 34566-8193 | 0 | G | BLUE | | 79 | 78 | 77 | 76 | 75 | 74 | | | 71 | | | | 67 | | 65 | | 63 | | |
| | | | | | | 60 | 59 | 58 | 57 | 56 | 55 | 54 | | 52 | | | | | 47 | | 45 | | 43 | | |
| | | | | | | 40 | | 38 | 37 | | | | 33 | 32 | 31 | 30 | 29 | | 27 | 26 | | | | | |
| | | | | | | 20 | | 18 | 17 | | | | | | 11 | 10 | 9 | 8 | 7 | 6 | 5 | 4 | 3 | 2 | 1 |
| SALEABLE | NOT APPLICABLE | 34566-8213 | 0 | H | ST GRY | | | | | | | 74 | 73 | | | | | | 67 | | 65 | 64 | 63 | 62 | 61 |
| | | | | | | | | | | | | | 53 | 52 | | | | | | | | 44 | 43 | 42 | 41 |
| | | | | | | | | 38 | | | | | 33 | | | | | | 27 | | 25 | | | | |
| | | | | | | 20 | | | | 16 | 15 | 14 | 13 | 12 | | 10 | 9 | 8 | | 6 | 5 | | | 2 | |
| SALEABLE | NOT APPLICABLE | 34566-8223 | 9 | A | BLACK | 72 | | | | | | | | | | 62 | 61 | | 59 | | 57 | | 55 | | |
| | | | | | | 52 | 51 | | | | | | | | | | | 40 | | | 37 | | | | |
| | | 73 | | | | | | | | 32 | | | 29 | | | | 25 | | | | | 20 | | | |
| | | | | | | | | | | 16 | 15 | 14 | | 12 | 11 | 10 | 9 | | | | | | | | |
| SALEABLE | NOT APPLICABLE | 34566-8233 | 9 | G | BLUE | | | | 77 | 76 | 75 | 74 | 73 | 72 | | 70 | 69 | 68 | | 66 | 65 | 64 | 63 | 62 | 61 |
| | | | | | | | | | | 56 | 55 | | 53 | 52 | | | | | | 46 | 45 | | 43 | 42 | |
| | | | | | | | | 38 | 37 | 36 | 35 | 34 | | | 31 | | | | | 26 | | | 23 | 22 | 21 |
| | | | | | | 20 | 19 | | 17 | 16 | 15 | 14 | 13 | | | 10 | | | 7 | 6 | | 4 | | | 1 |
| SALEABLE | NOT APPLICABLE | 34566-8243 | 9 | G | BLUE | | | | 77 | | 75 | 74 | 73 | 72 | | 70 | 69 | 68 | | 66 | 65 | 64 | 63 | 62 | 61 |
| | | | | | | | | | | 56 | 55 | | 53 | 52 | | | | | | 46 | 45 | | 43 | 42 | |
| | | | | | | | | 38 | | 36 | 35 | 34 | | | 31 | | | | | 26 | | | 23 | 22 | 21 |
| | | | | | | 20 | 19 | | 17 | 16 | 15 | 14 | 13 | | | 10 | | | 7 | 6 | | 4 | | | 1 |
| SALEABLE | NOT APPLICABLE | 34566-8253 | 9 | G | BLUE | | | | 77 | 76 | 75 | 74 | 73 | 72 | | 70 | 69 | 68 | | 66 | 65 | 64 | 63 | 62 | 61 |
| | | | | | | | | | | 56 | 55 | | 53 | 52 | | | | | | 46 | 45 | | 43 | 42 | |
| | | | | | | | | 38 | 37 | 36 | 35 | 34 | | | 31 | | | | | 26 | | | 23 | 22 | 21 |
| | | | | | | | | | 17 | 16 | 15 | 14 | 13 | | | 10 | | | 7 | 6 | | 4 | | | 1 |
| SALEABLE | NOT APPLICABLE | 34566-8263 | 9 | G | BLUE | | | | 77 | | 75 | 74 | 73 | 72 | | 70 | 69 | 68 | | 66 | 65 | 64 | 63 | 62 | 61 |
| | | | | | | | | | | 56 | 55 | | 53 | 52 | | | | | | 46 | 45 | | 43 | 42 | |
| | | | | | | | | 38 | | 36 | 35 | 34 | | | 31 | | | | | 26 | | | 23 | 22 | 21 |
| | | | | | | | | | 17 | 16 | 15 | 14 | 13 | | | 10 | | | 7 | 6 | | 4 | | | 1 |
| SALEABLE | NOT APPLICABLE | 34566-8273 | 9 | G | BLUE | 80 | 79 | 78 | | | | | | | 71 | | | | 67 | | | | | | |
| | | | | | | 60 | 59 | 58 | 57 | | | 54 | | | 51 | 50 | 49 | 48 | 47 | | | 44 | | | 41 |
| | | | | | | 40 | 39 | | | | | | 33 | 32 | | 30 | 29 | 28 | 27 | | 25 | 24 | | | |
| | | | | | | | | 18 | | | | | | 12 | 11 | | 9 | 8 | | | 5 | | 3 | 2 | |
| SALEABLE | NOT APPLICABLE | 34566-8283 | 9 | G | BLUE | 80 | 79 | 78 | | 76 | | | | | 71 | | | | 67 | | | | | | |
| | | | | | | 60 | 59 | 58 | 57 | | | 54 | | | 51 | 50 | 49 | 48 | 47 | | | 44 | | | 41 |
| | | | | | | 40 | 39 | | 37 | | | | 33 | 32 | | 30 | 29 | 28 | 27 | | 25 | 24 | | | |
| | | | | | | | | 18 | | | | | | 12 | 11 | | 9 | 8 | | | 5 | | 3 | 2 | |
| SALEABLE | NOT APPLICABLE | 34566-8293 | 9 | A | BLACK | | 71 | 70 | 69 | 68 | 67 | 66 | 65 | | 63 | | | 60 | 59 | 58 | | | | | |
| | | | | | | | | 50 | 49 | 48 | 47 | | | 44 | | 42 | | | 39 | 38 | | 36 | 35 | 34 | 33 |
| | | 73 | | | | | | | | | 31 | | | 28 | | 26 | | 24 | 23 | 22 | 21 | | 19 | 18 | 17 |
| | | | | | | | | | | | | 14 | | 12 | | | | 8 | 7 | 6 | 5 | | 3 | 2 | 1 |
| SALEABLE | NOT APPLICABLE | 34566-8313 | 9 | A | BLACK | | 71 | 70 | 69 | | 67 | 66 | 65 | | 63 | | | 60 | 59 | 58 | | | | | |
| | | | | | | | | 50 | 49 | 48 | 47 | | | 44 | | 42 | 41 | | 39 | 38 | | 36 | 35 | 34 | 33 |
| | | 73 | | | | | | | | | 31 | | | 28 | | 26 | | 24 | 23 | 22 | 21 | | 19 | 18 | 17 |
| | | | | | | | | | | | | | | 12 | | | | 8 | 7 | 6 | | | 3 | 2 | 1 |

# MX123 52/66/73/80-WAY RECEPTACLE ASSY SEALED PIN OUT SHEET

| STATUS | GM PART # | HRNS CONN ASSY | | | TPA | GROMMET CAP |
|---|---|---|---|---|---|---|
| | | MATERIAL/PART NUMBER | WIRE DRESS OPTION | KEY OPTION Fp | COLOR OPTION Fp | NUMBERS INDICATE CAVITIES OPEN FOR CIRCUITS Fp |
| SALEABLE | NOT APPLICABLE | 34566-8323 | 9 | A | BLACK | 71 70 69 68 67 66 65 63 60 53<br>50 49 47 44 42 39 38 36 33<br>73 31 28 26 24 23 22 21 19 18 17<br>14 12 8 7 6 5 2 1 |
| SALEABLE | NOT APPLICABLE | 34566-8333 | 9 | A | BLACK | 71 70 69 68 67 66 65 63 60 58 53<br>50 49 48 47 44 42 41 39 38 36 33<br>73 31 28 26 24 23 22 21 19 18 17<br>14 12 8 7 6 5 3 2 1 |
| SALEABLE | NOT APPLICABLE | 34566-8343 | 9 | A | BLACK | 71 70 69 68 67 66 65 63 60 59<br>50 49 47 44 42 39 38 36 35 34 33<br>73 31 28 26 24 23 22 21 19 18 17<br>14 12 8 7 6 5 2 1 |
| SALEABLE | NOT APPLICABLE | 34566-8353 | 9 | A | BLACK | 72 64 62 61 57 56 55 54 53<br>52 51 46 45 43 41 40 37<br>73 32 30 29 27 25 20<br>16 15 13 11 10 9 4 |
| SALEABLE | NOT APPLICABLE | 34566-8363 | 9 | A | BLACK | 72 68 64 62 61 57 56 55 54 53<br>52 51 46 45 43 40 37<br>73 32 30 29 27 25 20<br>16 15 14 13 11 10 9 5 4 |
| SALEABLE | NOT APPLICABLE | 34566-8373 | 9 | A | BLACK | 72 64 62 61 59 58 57 56 55 54<br>52 51 48 46 45 43 41 40 37 35 34<br>73 32 30 29 27 25 20<br>16 15 13 11 10 9 4 3 |
| SALEABLE | NOT APPLICABLE | 34566-8383 | 9 | A | BLACK | 72 64 62 61 59 57 56 55 54<br>52 51 46 45 43 40 37 35 34<br>73 32 30 29 27 25 20<br>16 15 13 11 10 9 4 |
| SALEABLE | NOT APPLICABLE | 34566-8393 | 0 | A | BLACK | 72 70 63 62 56 55 54 53<br>52 51 49 48 43 36 35 34 33<br>73 31 30 29 28 27 24 23 22 21 20 19 18 17<br>16 15 14 13 12 10 9 8 7 6 3 2 1 |
| SALEABLE | NOT APPLICABLE | 34566-8413 | 0 | A | BLACK | 72 70 63 62 56 55 54 53<br>52 51 49 48 43 36 35 34 33<br>73 31 30 29 28 27 24 23 22 21 20 19 18 17<br>16 15 14 12 10 9 8 7 6 3 2 1 |
| SALEABLE | NOT APPLICABLE | 34566-8423 | 0 | C | BLUE | 69 67 64 62 61 60 57 54<br>52 51 50 49 48 46 45 44 42 41 37 34 33<br>73 28 27 26 25<br>16 15 14 13 12 11 10 9 8 7 |
| SALEABLE | NOT APPLICABLE | 34566-8433 | 0 | H | ST GRY | 79 78 77 76 75 74 73 69 61<br>20 9 5 1 |
| SALEABLE | NOT APPLICABLE | 34566-8443 | 0 | C | BLUE | 71 70 67 66 65 64 61 60 59 58 57 54<br>52 51 50 48 47 45 44 41 39 38 37 34 33<br>73 32 28 27 25 23 18 17<br>16 15 14 13 12 11 10 9 8 7 6 5 |
| SALEABLE | NOT APPLICABLE | 34566-8453 | 0 | A | BLACK | 72 71 70 69 68 66 65 64 63 60 57 56 54<br>52 51 50 49 48 46 45 44 43 42 40 39 38 37 36 34<br>73 32 31 30 29 28 23 22 21 20<br>15 14 13 12 7 6 5 4 2 |
| SALEABLE | NOT APPLICABLE | 34566-8463 | 0 | B | ST GRY | 72 70 68 62 61 60 59 55<br>52 48 47 46 44 43 41 40 38 37 36 35<br>73 30 22 21 20 19 18<br>16 15 14 8 6 4 1 |
| SALEABLE | NOT APPLICABLE | 34566-8473 | 0 | C | BLUE | 71 70 67 66 65 64 62 61 60 58 57 55 54<br>52 51 50 49 48 47 45 44 42 41 38 37 35 34 33<br>73 32 28 27 26 25 19 18 17<br>16 15 14 13 12 11 10 9 8 7 6 5 |

molex

# MX123 52/66/73/80-WAY RECEPTACLE ASSY SEALED PIN OUT SHEET

| STATUS | GM PART # | HRNS CONN ASSY | | | TPA | GROMMET CAP |
|---|---|---|---|---|---|---|
| | | MATERIAL/PART NUMBER | WIRE DRESS OPTION | KEY OPTION Fp | COLOR OPTION Fp | NUMBERS INDICATE CAVITIES OPEN FOR CIRCUITS Fp |
| SALEABLE | NOT APPLICABLE | 34566-8483 | 0 | A | BLACK | 72 71 70 69 68 66 65 64 63 61 60 57 56 54 53<br>52 51 50 49 48 46 45 44 43 42 40 39 38 37 36 34 33<br>73 32 31 30 29 28 23 22 21 20<br>15 14 13 12 7 6 5 4 2 |
| SALEABLE | NOT APPLICABLE | 34566-8493 | 0 | B | ST GRY | 72 70 68 67 62 61 60 59 55<br>52 48 47 46 44 43 40 33<br>73 30 22 21 20 19 18 17<br>16 15 14 8 6 4 |
| SALEABLE | NOT APPLICABLE | 34566-8513 | 9 | A | BLACK | 72 71 70 69 68 66 65 64 63 61 60 57 56 54 53<br>52 51 50 49 48 46 45 44 43 40 39 38 37 36 34 33<br>73 32 31 30 29 28 24 23 22<br>15 14 13 12 7 6 5 2 |
| SALEABLE | NOT APPLICABLE | 34566-8523 | 9 | B | ST GRY | 72 70 68 62 61 55<br>52 48 47 46 43 40<br>73 30 22 21 20 19 18 17<br>16 15 14 8 6 4 2 |
| SALEABLE | NOT APPLICABLE | 34566-8533 | 9 | C | BLUE | 70 67 66 65 64 61 60 57 54<br>52 51 50 49 48 47 45 44 41 37 34 33<br>73 32 28 27 25 18 17<br>16 15 14 13 12 11 10 |
| SALEABLE | NOT APPLICABLE | 34566-8543 | 9 | C | BLUE | 71 69 67 66 65 64 60 57 54<br>52 51 50 49 48 47 46 45 44 37 34 33<br>73 32 28 27<br>16 15 14 13 12 11 10 9 8 7 |
| SALEABLE | NOT APPLICABLE | 34566-8553 | 0 | B | ST GRY | 72 68 62 61 60 59 55<br>52 46 43 41 40<br>73 22 21 20<br>16 15 14 8 6 4 |
| SALEABLE | NOT APPLICABLE | 34566-8563 | 0 | A | BLACK | 72 70 67 63 60 59 58 57 56 55<br>52 51 48 47 46 43 42 40 39 38 37 36 35<br>73 28 22 21 18 17<br>12 11 9 7 2 1 |
| SALEABLE | NOT APPLICABLE | 34566-8573 | 0 | B | ST GRY | 72 71 70 69 68 67 66 65 64 63 61 60 59 57 56 55<br>52 51 50 49 48 47 46 45 44 43 41 40 39 38 37 36 35 33<br>73 32 31 30 29 28 26 24 23 22 21 20 19<br>16 15 14 13 12 9 8 7 6 5 4 3 |
| SALEABLE | NOT APPLICABLE | 34566-8583 | 0 | C | BLUE | 72 71 70 69 67 66 65 64 60 56 54<br>52 51 50 49 47 46 45 44 40 39 38 34<br>73 31 30 28 26 25 24 23 22 21 17<br>16 15 14 13 12 9 8 7 6 5 |
| SALEABLE | NOT APPLICABLE | 34566-8593 | 0 | B | ST GRY | 72 68 62 61 60 59 55<br>52 48 47 46 43 41 40 38 37 36 35<br>73 30 22 21 20 19 18<br>16 15 14 8 6 4 1 |
| SALEABLE | TBD | 34822-0183 | 0 | A | BLACK | 64 63 62 61 60 59 54 53 51 49 66<br>38 37 35 33<br>65 24 23 22 21 20 19 18 17<br>15 14 13 8 7 4 3 2 1 |
| SALEABLE | TBD | 34822-0193 | 0 | A | BLACK | 64 63 54 53 51 49 66<br>38 37 35 33<br>65 28 24 23 21 20 19 18 17<br>15 14 13 8 7 4 3 2 1 |
| SALEABLE | TBD | 34822-0203 | 0 | A | BLACK | 64 63 62 61 60 59 54 53 51 49 66<br>38 37 35 33<br>65 31 28 24 23 22 21 20 19 18 17<br>15 14 13 8 7 4 2 1 |
| SALEABLE | TBD | 34822-0213 | 0 | A | BLACK | 64 63 62 61 60 59 54 53 51 49 66<br>38 37 35 33<br>65 31 24 23 22 21 20 19 18 17<br>15 14 13 8 7 4 3 2 1 |

# MX123 52/66/73/80-WAY RECEPTACLE ASSY SEALED PIN OUT SHEET

| STATUS | GM PART # | HRNS CONN ASSY | | | TPA | GROMMET CAP | | | | | | | | | | | | | | | | | | | |
|---|---|---|---|---|---|---|---|---|---|---|---|---|---|---|---|---|---|---|---|---|---|---|---|---|---|
| | | MATERIAL/PART NUMBER | WIRE DRESS OPTION | KEY OPTION Fp | COLOR OPTION Fp | NUMBERS INDICATE CAVITIES OPEN FOR CIRCUITS Fp | | | | | | | | | | | | | | | | | | | |
| SALEABLE | NOT APPLICABLE | 34566-8613 | 0 | C | BLUE | | 71 | 70 | | | 67 | 66 | 65 | 64 | | | 61 | 60 | 59 | 58 | 57 | | | 54 | |
| | | | | | | 52 | 51 | 50 | | 48 | 47 | | 45 | 44 | | | 41 | | 39 | 38 | 37 | | | 34 | 33 |
| | | | | | | 73 | | | | 32 | | | | 28 | 27 | | 25 | | 23 | | | | | 18 | 17 |
| | | | | | | | | | | 16 | 15 | 14 | 13 | 12 | 11 | 10 | 9 | 8 | 7 | | | | | | |
| SALEABLE | NOT APPLICABLE | 34566-8623 | 9 | C | BLUE | | | | | 68 | | | 65 | | 63 | 62 | 61 | | 59 | 58 | 57 | 56 | 55 | | 53 |
| | | | | | | | | | | 48 | | | 45 | | 43 | 42 | 41 | | | | 37 | 36 | 35 | 34 | 33 |
| | | | | | | 73 | | | | 32 | 31 | | | | | | | | | | | 20 | 19 | 18 | |
| | | | | | | | | | | | | | | | | | | | | | | 4 | 3 | 2 | 1 |
| SALEABLE | NOT APPLICABLE | 34566-8633 | 0 | B | ST GRY | 72 | | | | | | | | | | 62 | 61 | | | | | | | | |
| | | | | | | 52 | | | | 48 | 47 | 46 | | | 43 | | | 40 | | | | | | | |
| | | | | | | 73 | | | | | | 30 | | | | | | | | 22 | 21 | 20 | 19 | 18 | 17 |
| | | | | | | | | | | 16 | 15 | 14 | | | | | | | | 6 | | 4 | | | |
| SALEABLE | NOT APPLICABLE | 34566-8643 | 0 | C | BLUE | | 71 | 70 | | | 67 | 66 | | 64 | | | 61 | 60 | | | 57 | | | 54 | |
| | | | | | | 52 | 51 | 50 | 49 | 48 | | | 45 | 44 | | | 41 | | | | 37 | | | 34 | 33 |
| | | | | | | 73 | | | | 32 | | | | 28 | 27 | | 25 | | | | | | | 18 | 17 |
| | | | | | | | | | | 16 | 15 | 14 | 13 | 12 | 11 | 10 | 9 | 8 | 7 | | | | | | |
| SALEABLE | NOT APPLICABLE | 34566-8653 | 9 | C | BLUE | | 71 | | 69 | | 67 | 66 | 65 | 64 | 63 | | 61 | 60 | | | 57 | | | | |
| | | | | | | 52 | 51 | 50 | | 48 | 47 | 46 | 45 | | 43 | | 41 | | | | 37 | | | 34 | 33 |
| | | | | | | 73 | | | | | | | | 28 | 27 | | 25 | | | | | | | | |
| | | | | | | | | | | 16 | 15 | 14 | 13 | 12 | 11 | 10 | 9 | 8 | 7 | | | | | | |
| SALEABLE | NOT APPLICABLE | 34566-8663 | 0 | B | ST GRY | 72 | 71 | 70 | 69 | | | | | 64 | 63 | | 61 | 60 | | 58 | 57 | 56 | 55 | | |
| | | | | | | 52 | 51 | 50 | 49 | | | | | | 43 | | | | | 38 | 37 | 36 | | | 33 |
| | | | | | | 73 | | | | 32 | | 30 | 29 | 28 | | 26 | 25 | 24 | 23 | 22 | 21 | 20 | | | |
| | | | | | | | | | | 16 | 15 | 14 | 13 | 12 | 11 | 10 | 9 | 8 | 7 | 6 | 5 | 4 | | | |
| SALEABLE | NOT APPLICABLE | 34822-0223 | 0 | A | BLACK | 64 | 63 | 62 | 61 | 60 | 59 | | | | | 54 | 53 | | 51 | | 49 | 66 | | | |
| | | | | | | | | | | | | | | | | 38 | 37 | | 35 | | 33 | | | | |
| | | | | | | 65 | | | | | 31 | | | 28 | | | | 24 | 23 | 22 | 21 | 20 | 19 | 18 | 17 |
| | | | | | | | | | | | 15 | 14 | 13 | | | | | 8 | 7 | | | 4 | 3 | 2 | 1 |
| SALEABLE | NOT APPLICABLE | 34566-8673 | 0 | F | NATURAL | 72 | | 70 | | 68 | 67 | 66 | | | 63 | 62 | | | 59 | | 57 | | | | 53 |
| | | | | | | 52 | 51 | | 49 | 48 | 47 | 46 | | 44 | | | 41 | 40 | 39 | | 37 | 36 | 35 | 34 | 33 |
| | | | | | | 73 | | | | 32 | | 30 | | | 27 | 26 | 25 | 24 | | 22 | 21 | 20 | | | |
| | | | | | | | | | | | 15 | 14 | 13 | | | 10 | 9 | 8 | | 6 | 5 | 4 | | 2 | |
| SALEABLE | NOT APPLICABLE | 34566-8683 | 0 | B | ST GRY | 72 | | 70 | | 68 | 67 | 66 | | | 63 | 62 | | | 59 | | 57 | | | | 53 |
| | | | | | | 52 | 51 | | 49 | 48 | 47 | 46 | | 44 | | | 41 | 40 | 39 | | 37 | 36 | 35 | 34 | 33 |
| | | | | | | 73 | | | | 32 | | 30 | | | 27 | 26 | 25 | 24 | | 22 | 21 | 20 | | | |
| | | | | | | | | | | | 15 | 14 | 13 | | | 10 | 9 | 8 | | 6 | 5 | 4 | | 2 | |
| SALEABLE | NOT APPLICABLE | 34566-8693 | 0 | A | BLACK | 72 | | 70 | | 68 | 67 | 66 | | | 63 | 62 | | | 59 | | 57 | | | | 53 |
| | | | | | | 52 | 51 | | 49 | 48 | 47 | 46 | | 44 | | | 41 | 40 | 39 | | 37 | 36 | 35 | 34 | 33 |
| | | | | | | 73 | | | | 32 | | 30 | | | 27 | 26 | 25 | 24 | | 22 | 21 | 20 | | | |
| | | | | | | | | | | | 15 | 14 | 13 | | | 10 | 9 | 8 | | 6 | 5 | 4 | | 2 | |
| SALEABLE | NOT APPLICABLE | 34566-8713 | 9 | B | ST GRY | 72 | 71 | 70 | 69 | | | | | 64 | 63 | | 61 | 60 | | 58 | 57 | 56 | 55 | | |
| | | | | | | 52 | 51 | 50 | 49 | | | | | | 43 | | | | | 38 | 37 | 36 | | | 33 |
| | | | | | | 73 | | | | 32 | | 30 | 29 | 28 | | 26 | 25 | 24 | 23 | 22 | 21 | 20 | | | |
| | | | | | | | | | | 16 | 15 | 14 | 13 | 12 | 11 | 10 | 9 | 8 | 7 | 6 | 5 | 4 | | | |
| SALEABLE | NOT APPLICABLE | 34566-8723 | 0 | C | BLUE | | 71 | 70 | | | | 66 | | 64 | | | 61 | 60 | | | 57 | | | 54 | |
| | | | | | | 52 | 51 | 50 | 49 | 48 | | | 45 | 44 | | | 41 | | | | 37 | | | 34 | 33 |
| | | | | | | 73 | | | | 32 | | | | 28 | 27 | | 25 | | | | | | | 18 | 17 |
| | | | | | | | | | | 16 | 15 | 14 | 13 | 12 | 11 | 10 | 9 | 8 | 7 | | | | | | |
| SALEABLE | NOT APPLICABLE | 34566-8733 | 0 | A | BLACK | 72 | 71 | 70 | 69 | 68 | | 66 | 65 | 64 | 63 | | | 60 | | | 57 | 56 | | 54 | |
| | | | | | | 52 | 51 | 50 | 49 | 48 | | 46 | 45 | 44 | 43 | 42 | | 40 | 39 | 38 | 37 | 36 | | 34 | |
| | | | | | | 73 | | | | 32 | 31 | 30 | 29 | 28 | | | | | 23 | 22 | 21 | 20 | | | |
| | | | | | | | | | | | 15 | 14 | 13 | 12 | | | | | 7 | 6 | 5 | 4 | 3 | 2 | |
| SALEABLE | NOT APPLICABLE | 34566-8743 | 0 | C | BLUE | 72 | 71 | 70 | 69 | | 67 | 66 | | 64 | | | | | | | | | | 54 | |
| | | | | | | 52 | 51 | 50 | 49 | | 47 | 46 | | 44 | | | | | 39 | 38 | | | | | |
| | | | | | | 73 | | | | | | 30 | 29 | 28 | 27 | 26 | 25 | 24 | 23 | 22 | 21 | | | | 17 |
| | | | | | | | | | | 16 | 15 | 14 | 13 | 12 | 11 | 10 | 9 | 8 | 7 | 6 | 5 | | | | |
| SALEABLE | NOT APPLICABLE | 34566-8753 | 0 | B | ST GRY | 72 | 71 | 70 | 69 | 68 | 67 | 66 | 65 | 64 | 63 | | 61 | 60 | | 58 | 57 | 56 | 55 | 54 | 53 |
| | | | | | | 52 | 51 | 50 | 49 | 48 | 47 | 46 | 45 | 44 | 43 | | | 40 | | | 37 | 36 | 35 | 34 | 33 |
| | | | | | | 73 | | | | 32 | | 30 | 29 | 28 | | 26 | 25 | 24 | | | 21 | | 19 | | |
| | | | | | | | | | | 16 | | 14 | 13 | 12 | 11 | 10 | 9 | 8 | | 6 | 5 | | | 2 | 1 |

# MX123 52/66/73/80-WAY RECEPTACLE ASSY SEALED PIN OUT SHEET

| STATUS | GM PART # | HRNS CONN ASSY | | | TPA | GROMMET CAP |
|---|---|---|---|---|---|---|
| | | MATERIAL/PART NUMBER | WIRE DRESS OPTION | KEY OPTION Fp | COLOR OPTION Fp | NUMBERS INDICATE CAVITIES OPEN FOR CIRCUITS Fp |
| SALEABLE | NOT APPLICABLE | 34566-8763 | 0 | A | BLACK | 72 71 70 67 66 59 58 57 56 55 54 53<br>52 51 50 47 46 39 37 36 35 33<br>73 32 31 30 29 28 27 26 21 18 17<br>16 15 14 13 12 11 10 8 7 3 2 1 |
| SALEABLE | 12672857 | 34822-0243 | 9 | A | BLACK | 64 63 62 61 60 59 54 53 51 49<br>47 38 37 35 33<br>65 28 25 24 22 21 20 19 18 17<br>15 14 13 12 8 7 4 3 2 1 |
| SALEABLE | NOT APPLICABLE | 34822-0253 | 0 | A | BLACK | 63 62 61 60 59 54 53 51 49<br>38 37 35 33<br>65 31 28 24 23 22 21 20 19 18 17<br>15 14 13 8 7 4 3 2 1 |
| SALEABLE | NOT APPLICABLE | 34822-0263 | 9 | C | BLUE | 64 63 62 60 59 57 56 55 54 53 52 51 50 49<br>48 47 46 45 42 39 37 36 35 34 33<br>65 32 30 29 28 27 26 25 24 23 22 21 19 18 17<br>16 15 14 13 12 11 10 9 8 7 6 3 2 1 |
| SALEABLE | NOT APPLICABLE | 34822-0273 | 9 | A | BLACK | 64 63 54 53 51 49<br>47 38 37 35 33<br>65 28 22 20 19 18 17<br>15 14 13 12 8 7 4 3 2 1 |
| SALEABLE | NOT APPLICABLE | 34822-0283 | 0 | A | BLACK | 61 60 59 58 56 55 51 49<br>42<br>65 32 17<br>16 8 2 |
| SALEABLE | NOT APPLICABLE | 34822-0293 | 0 | A | BLACK | 64 63 54 53 51 49<br>47 38 37 35 33<br>65 28 22 20 19 18 17<br>15 14 13 12 8 7 4 3 2 1 |
| SALEABLE | NOT APPLICABLE | 34566-8773 | 9 | B | ST GRY | 72 70 68 62 61 60 59 55<br>52 48 47 46 43 41 40<br>73 30 22 21 20 19 18 17<br>16 15 14 8 6 4 2 |
| SALEABLE | NOT APPLICABLE | 34566-8783 | 9 | A | BLACK | 72 71 70 69 68 66 65 64 63 61 60 57 56 54 53<br>52 51 50 49 48 46 45 44 43 40 39 38 37 36 34 33<br>73 32 31 30 29 28 23 22 21<br>15 14 13 12 7 6 5 2 |
| SALEABLE | NOT APPLICABLE | 34566-8793 | 9 | C | BLUE | 71 70 67 66 65 61 60 57 54<br>52 51 50 49 48 47 45 44 41 37 34 33<br>73 32 28 27 25 18 17<br>16 15 14 13 12 11 10 9 8 7 |
| SALEABLE | NOT APPLICABLE | 34566-8813 | 9 | B | ST GRY | 72 71 70 69 68 67 65 64 63 61 60 59 57 56 55 54 53<br>52 51 50 49 48 47 46 45 44 43 42 40 39 36 35 34 33<br>73 32 31 30 29 28 27 26 25 24 23 22 21<br>16 15 14 13 12 11 10 9 8 7 6 4 3 2 |
| SALEABLE | NOT APPLICABLE | 34566-8823 | 9 | C | BLUE | 72 71 70 69 67 66 64 60 54 53<br>52 51 50 49 47 46 44 40 39<br>73 30 29 28 27 26 25 24 23 22 21 17<br>16 15 14 13 12 11 10 9 8 7 6 5 |
| SALEABLE | NOT APPLICABLE | 34566-8833 | 9 | C | BLUE | 72 70 68 67 66 63 62 59 57 54 53<br>52 51 49 48 47 46 44 41 40 39 37 36 35 34 33<br>73 32 30 27 26 25 24 22 21 20 17<br>15 14 13 10 9 8 7 6 5 4 2 1 |
| SALEABLE | NOT APPLICABLE | 34566-8843 | 0 | C | BLUE | 72 71 70 69 67 66 64 54<br>52 51 50 49 47 46 44 41 39 38<br>73 30 29 28 27 26 25 24 23 22 21 17<br>16 15 14 13 12 11 10 9 8 7 6 5 |
| SALEABLE | NOT APPLICABLE | 34566-8853 | 0 | B | ST GRY | 72 68 67 63 62 61 60 59 55<br>52 48 47 46 44 43 41 40 38 37 36 35<br>73 30 27 22 21 20 19 18<br>16 14 11 8 6 4 1 |

# MX123 52/66/73/80-WAY RECEPTACLE ASSY SEALED PIN OUT SHEET

| STATUS | GM PART # | HRNS CONN ASSY | | | TPA | GROMMET CAP |
|---|---|---|---|---|---|---|
| | | MATERIAL/PART NUMBER | WIRE DRESS OPTION | KEY OPTION Fp | COLOR OPTION Fp | NUMBERS INDICATE CAVITIES OPEN FOR CIRCUITS Fp |
| SALEABLE | NOT APPLICABLE | 34566-8863 | 0 | B | ST GRY | 72 71 70 69 64 63 61 58 57 56 55<br>52 51 50 49 43 38 37 36 33<br>73 32 30 29 28 26 25 24 23 22 21 20<br>16 14 13 12 11 10 9 8 7 6 5 4 |
| SALEABLE | NOT APPLICABLE | 34566-8873 | 0 | B | ST GRY | 72 71 70 69 64 63 61 58 57 56 55<br>52 51 50 49 43 38 37 36 33<br>73 32 31 30 29 28 26 25 24 23 22 21 20<br>16 15 14 13 12 11 10 9 8 7 6 5 4 |
| SALEABLE | NOT APPLICABLE | 34566-8883 | 0 | B | ST GRY | 72 71 70 69 68 67 66 65 64 63 61 60 59 58 57 56 55<br>52 51 50 49 48 47 46 45 44 43 41 40 39 38 37 36 35 34 33<br>73 32 31 30 29 28 27 26 25 24 23 22 21 20 19 18 17<br>16 15 14 13 12 11 10 9 8 7 6 5 4 3 2 1 |
| SALEABLE | NOT APPLICABLE | 34566-8893 | 0 | A | BLACK | 72 70 67 66 65 63 60 59 58 57 56 55<br>52 51 49 48 47 46 45 43 42 40 39 38 37 36 35<br>73 28 27 23 22 21 18 17<br>12 11 9 7 2 1 |
| SALEABLE | NOT APPLICABLE | 34566-8913 | 0 | A | BLACK | 72 71 70 69 68 66 65 64 63 60 57 56 54<br>52 51 50 49 48 46 45 44 43 42 41 40 39 38 37 36 34<br>73 32 31 30 29 28 23 22 21<br>15 14 13 12 7 6 5 2 1 |
| SALEABLE | NOT APPLICABLE | 34566-8923 | 0 | A | BLACK | 71 70 69 68 67 64 63 62 61 60 59 57 56 55 54 53<br>52 51 50 49 46 45 44 43 42 41 40 39 38 37 36 34<br>73 32 29 28 27 26 25 21 18<br>16 15 14 13 12 11 10 9 8 5 3 |
| SALEABLE | NOT APPLICABLE | 34566-8933 | 0 | C | BLUE | 72 71 69 68 66 65 63 59 58 56 53<br>43 39 38 36<br>73 31 30 29 24 23 22 21 20<br>6 5 4 3 2 1 |
| SALEABLE | NOT APPLICABLE | 34566-8943 | 0 | B | ST GRY | 72 68 62 61 55<br>52 46 43 40<br>73 22 21 20 19 18 17<br>16 15 14 8 6 4 3 2 |
| SALEABLE | NOT APPLICABLE | 34566-8953 | 9 | C | BLUE | 72 71 70 69 67 66 64 60 54<br>52 51 50 49 47 46 44 40 39 38<br>73 30 29 28 27 26 25 24 23 22 21 17<br>16 15 14 13 12 11 10 9 8 7 6 5 |
| SALEABLE | NOT APPLICABLE | 34566-8963 | 0 | B | ST GRY | 72 62 61 60 59 55<br>52 48 47 46 43 41 40 38 37 36 35<br>73 30 22 21 20 19 18 17<br>16 15 14 6 4 1 |
| SALEABLE | NOT APPLICABLE | 34566-8973 | 0 | A | BLACK | 72 71 70 69 68 66 65 64 63 60 57 56 54<br>52 51 50 49 48 46 45 44 43 42 40 39 38 37 36 34<br>73 32 31 30 29 28 23 22 21 17<br>15 14 13 12 7 6 5 2 |
| SALEABLE | NOT APPLICABLE | 34566-8983 | 0 | C | BLUE | 71 70 67 66 64 61 60 57 54<br>52 51 50 49 48 47 45 44 41 37 34 33<br>73 32 28 27 25 18 17<br>16 15 14 13 12 11 10 9 8 7 |
| SALEABLE | NOT APPLICABLE | 34822-0303 | 0 | A | BLACK | 66<br>65 |
| SALEABLE | NOT APPLICABLE | 34822-0313 | 0 | A | BLACK | 63 62 61 60 59 54 53 49<br>38 37 35 33<br>66<br>65 31 28 24 23 22 21 20 19 18 17<br>16 15 14 13 8 7 4 3 2 1 |
| SALEABLE | NOT APPLICABLE | 34566-8993 | 0 | B | ST GRY | 66 62 58<br>41 38 37<br>73 19 18 17<br>5 1 |

molex

# MX123 52/66/73/80-WAY RECEPTACLE ASSY SEALED PIN OUT SHEET

| STATUS | GM PART # | HRNS CONN ASSY | | | TPA | GROMMET CAP |
|---|---|---|---|---|---|---|
| | | MATERIAL/PART NUMBER | WIRE DRESS OPTION | KEY OPTION Fp | COLOR OPTION Fp | NUMBERS INDICATE CAVITIES OPEN FOR CIRCUITS Fp |
| SALEABLE | NOT APPLICABLE | 34566-9013 | 0 | A | BLACK | 69 68 65 64 63 62 61 60<br>49 48 45 44 43 42 41 40 38 34<br>73 25 24 23 22 20 19<br>9 6 5 4 |
| SALEABLE | NOT APPLICABLE | 34566-9023 | 0 | B | ST GRY | 62 59<br>42 41 39 38<br>73 31 27 23 22 20 18 17<br>15 7 4 3 |
| SALEABLE | NOT APPLICABLE | 34822-0323 | 9 | A | BLACK | 62 61 60 59 58 57 56 55 52 50 66<br>48 47 46 45 44 43 42 41 40 39 36 34<br>65 32 31 30 29 27 26 25 23 21<br>11 10 9 6 5 |
| SALEABLE | NOT APPLICABLE | 34566-9033 | 0 | C | BLUE | 72 70 67 63 60 59 58 57 56 55<br>52 51 50 49 47 46 45 44 39 38 34<br>73 31 30 29 28 26 25 24 23 22 21 17<br>16 15 14 13 12 9 8 7 6 5 |
| SALEABLE | NOT APPLICABLE | 34566-9043 | 0 | C | BLUE | 72 71 70 69 67 66 65 64 54<br>52 51 50 49 47 46 45 44 39 38<br>73 30 29 28 26 25 24 23 22 21 17<br>16 15 14 13 12 9 8 7 6 5 |
| SALEABLE | NOT APPLICABLE | 34566-9053 | 0 | C | BLUE | 72 71 70 69 68 66 65 64 61 60 57 56 54 53<br>52 51 50 49 48 46 45 44 43 42 40 39 38 37 36 34 33<br>73 31 30 29 28 23 22 21 20<br>15 14 13 12 7 6 5 4 2 |
| SALEABLE | NOT APPLICABLE | 34566-9063 | 0 | B | ST GRY | 72 68 62 61 60 59 55<br>52 46 44 43 41 40<br>73 22 21 20 19 18 17<br>16 15 14 8 6 4 |
| SALEABLE | NOT APPLICABLE | 34566-9073 | 0 | B | ST GRY | 72 71 70 69 68 67 66 65 64 63 61 60 59 57 56 55<br>52 51 50 49 48 47 46 45 44 43 41 40 39 38 37 36 35 34 33<br>73 32 31 30 29 28 26 24 23 22 21 20 19 18 17<br>16 15 14 13 12 9 8 7 6 5 4 3 2 1 |
| SALEABLE | NOT APPLICABLE | 34566-9083 | 0 | A | BLACK | 72 70 67 63 60 59 58 57 56 55<br>52 51 48 47 46 43 42 40 39 38 37 36 35<br>73 28 27 22 21 18 17<br>12 11 9 7 2 1 |
| SALEABLE | NOT APPLICABLE | 34566-9093 | 0 | A | BLACK | 72 70 67 63 60 59 58 57 56 55<br>52 51 48 47 46 43 42 40 39 38 37 36 35<br>73 28 27 22 21 18 17<br>12 11 9 7 2 1 |
| SALEABLE | NOT APPLICABLE | 34566-9113 | 0 | A | BLACK | 72 71 70 69 68 66 65 64 61 60 57 56 54 53<br>52 51 50 49 48 46 45 44 43 42 40 39 38 37 36 34 33<br>73 31 30 29 28 23 22 21 20<br>15 14 13 12 10 7 6 5 4 2 |
| SALEABLE | NOT APPLICABLE | 34566-9123 | 0 | G | BLUE | 78 77 76 75 74 72 70 64 63<br>60 58 57 56 55 54 52 51 50 49 47 45<br>40 39 38 37 33 32 31 27 26<br>20 19 18 17 10 9 8 6 4 3 2 1 |
| SALEABLE | NOT APPLICABLE | 34822-0333 | 0 | A | BLACK | 58 57 56 55 52 50 66<br>48 46 45 44 43 42 41 40 39 36 34<br>65 32 31 30 29 27 26 23<br>16 11 10 9 6 5 |
| SALEABLE | NOT APPLICABLE | 34822-0343 | 0 | A | BLACK | 61 58 66<br>44 43 41 40 38<br>65 31<br>5 4 |
| SALEABLE | NOT APPLICABLE | 34822-0353 | 0 | A | BLACK | 64 58 57 56 55 52 50 66<br>48 47 46 45 44 43 42 41 40 39 36 34<br>65 32 30 29 27 26<br>16 12 11 10 9 6 5 |

# MX123 52/66/73/80-WAY RECEPTACLE ASSY SEALED PIN OUT SHEET

| STATUS | GM PART # | HRNS CONN ASSY | | | TPA | GROMMET CAP |
|---|---|---|---|---|---|---|
| | | MATERIAL/PART NUMBER | WIRE DRESS OPTION | KEY OPTION Fp | COLOR OPTION Fp | NUMBERS INDICATE CAVITIES OPEN FOR CIRCUITS Fp |
| SALEABLE | NOT APPLICABLE | 34566-9143 | 9 | F | NATURAL | 72 71 70 67 66 65 64 63 62 61 56 55 54 53<br>52 51 50 49 48 47 46 45 44 41 40 39 36 35 34<br>73 32 31 29 28 27 26 25 24 23 22 21 20<br>16 15 14 13 12 11 10 9 8 7 6 5 4 |
| SALEABLE | NOT APPLICABLE | 34566-9153 | 9 | B | ST GRY | 66 62 58<br>41 38 37<br>73 20 19 18 17<br>8 5 1 |
| SALEABLE | NOT APPLICABLE | 34566-9163 | 9 | B | ST GRY | 68 67 66 65 62 60 59 54 53<br>48 47 46 45 44 42 41 40 39 35 34<br>73 31 27 19 18 17<br>15 3 2 1 |
| SALEABLE | NOT APPLICABLE | 34566-9173 | 0 | B | ST GRY | 65 62 58<br>41 38 37<br>73 19 18 17<br>5 1 |
| SALEABLE | NOT APPLICABLE | 34822-0363 | 9 | C | BLUE | 61 58 66<br>44 43 41 40 38<br>65 31 20<br>5 4 |
| SALEABLE | NOT APPLICABLE | 34822-0373 | 9 | A | BLACK | 64 63 62 61 60 55 52 51 49 66<br>48 47 46 45 38<br>65 32 30 29 27 22 21 20 19 18 17<br>12 11 10 5 4 3 2 1 |
| SALEABLE | NOT APPLICABLE | 34822-0383 | 9 | A | BLACK | 64 63 62 61 60 57 52 51 49 66<br>48 47 46 45 40<br>65 32 30 29 27 22 21 20 19 18 17<br>12 11 10 5 4 3 2 1 |
| SALEABLE | NOT APPLICABLE | 34822-0393 | 0 | A | BLACK | 64 63 62 61 60 57 52 51 49 66<br>48 47 46 45 38<br>65 32 30 29 27 22 21 20 19 18 17<br>12 11 10 5 4 3 2 1 |
| SALEABLE | NOT APPLICABLE | 34822-0403 | 9 | A | BLACK | 64 63 54 53 51 49 66<br>38 37 35 33<br>65 31 28 22 20 19 18 17<br>15 14 13 12 11 8 7 4 3 2 1 |
| SALEABLE | NOT APPLICABLE | 34822-0413 | 0 | A | BLACK | 64 63 54 53 51 49 66<br>38 37 35 33<br>65 28 22 20 19 18 17<br>15 14 13 12 8 7 4 3 2 1 |
| SALEABLE | NOT APPLICABLE | 34822-0423 | 9 | A | BLACK | 59 58 57 56 54 53 50 66<br>44 43 42 41 40 39 37 36 35 34 33<br>65 31 28 26 25 24 23<br>16 15 14 13 9 8 7 6 |
| SALEABLE | NOT APPLICABLE | 34566-9183 | 9 | B | ST GRY | 72 71 70 69 68 67 65 64 63 62 61 60 59 58 57 56 55 54 53<br>52 51 50 49 48 47 46 45 44 43 42 40 39 36 35 34 33<br>73 32 31 30 29 28 27 26 25 24 23 22 21 19<br>16 15 14 13 12 11 10 9 7 6 4 3 2 |
| SALEABLE | NOT APPLICABLE | 34566-9193 | 9 | F | NATURAL | 69 68 58 57<br>43 42 38 37 33<br>73 30 19 18 17<br>8 3 2 1 |
| SALEABLE | NOT APPLICABLE | 34822-0433 | 0 | A | BLACK | 64 63 62 60 59 57 56 55 54 53 52 51 50 49 66<br>48 47 46 45 42 39 37 36 35 34 33<br>65 32 30 29 28 27 26 25 24 23 22 21 20 19 18 17<br>16 15 14 13 12 11 10 9 8 7 6 3 2 1 |
| SALEABLE | NOT APPLICABLE | 34822-0443 | 0 | A | BLACK | 64 63 62 60 59 57 56 55 54 53 52 51 50 49 66<br>48 47 46 45 42 39 37 36 35 34 33<br>65 32 31 30 29 28 27 26 25 24 23 22 21 20 19 18 17<br>16 15 14 13 12 11 10 9 8 7 6 3 2 1 |

# MX123 52/66/73/80-WAY RECEPTACLE ASSY SEALED PIN OUT SHEET

| STATUS | GM PART # | HRNS CONN ASSY | | | TPA | GROMMET CAP |
|---|---|---|---|---|---|---|
| | | MATERIAL/PART NUMBER | WIRE DRESS OPTION | KEY OPTION Fp | COLOR OPTION Fp | NUMBERS INDICATE CAVITIES OPEN FOR CIRCUITS Fp |
| SALEABLE | NOT APPLICABLE | 34822-0453 | 0 | A | BLACK | 59 56 54 53 50 66<br>44 43 42 41 40 39 37 36 35 34 33<br>65 31 28 26 25 24 23<br>16 15 14 13 9 8 7 6 |
| SALEABLE | NOT APPLICABLE | 34566-9213 | 0 | B | ST GRY | 68 67 66 65 64 59 58 57 55 54 53<br>51 50 49 48 46 45 43 42 41 40 39 38 37 35 33<br>73 32 31 30 26 24 23 22 20<br>16 13 10 9 8 7 6 5 4 3 2 |
| SALEABLE | NOT APPLICABLE | 34566-9223 | 9 | B | ST GRY | 72 62 61 60 59 55<br>52 48 47 46 41 40 38 37 36 35<br>73 30 22 21 20 19 18<br>16 15 14 6 4 3 1 |
| SALEABLE | NOT APPLICABLE | 34566-9233 | 9 | C | BLUE | 71 67 65 64 61 60 59 57 54<br>52 51 50 48 47 45 44 41 39 37 34 33<br>73 32 28 27 25 23 18<br>16 15 14 13 12 11 10 9 8 7 6 5 |
| SALEABLE | NOT APPLICABLE | 34566-9243 | 9 | B | ST GRY | 72 71 70 69 64 63 61 58 57 56 55<br>52 51 50 49 43 38 37 36 33<br>73 32 30 29 28 26 25 24 23 22 21 20<br>16 14 13 12 11 10 9 8 7 6 5 4 |
| SALEABLE | NOT APPLICABLE | 34566-9253 | 9 | B | ST GRY | 72 71 70 69 68 67 65 64 63 62 61 60 59 57 56 55 54 53<br>52 51 50 49 48 47 46 45 44 43 42 40 39 36 35 34 33<br>73 32 31 30 29 28 27 26 25 24 23 22 21<br>16 15 14 13 12 11 10 9 7 6 4 3 2 |
| SALEABLE | NOT APPLICABLE | 34566-9263 | 9 | B | ST GRY | 72 68 62 61 60 59 55<br>52 46 43 41 40<br>73 22 21 20<br>16 15 14 8 6 4 |
| SALEABLE | NOT APPLICABLE | 34566-9313 | 9 | A | BLACK | 64 63 62 60 59 57 56 55 54 53 52 51 50 49 66<br>48 47 46 45 43 42 39 37 36 35 34 33<br>65 32 30 29 28 27 26 25 24 23 22 21 20 19 18 17<br>16 15 14 13 12 11 10 9 8 7 6 3 2 1 |
| SALEABLE | NOT APPLICABLE | 34822-0463 | 0 | A | BLACK | 64 63 62 60 59 57 56 55 54 53 52 51 50 49 66<br>48 47 46 45 43 42 39 37 36 35 34 33<br>65 32 30 29 28 27 26 25 24 23 22 21 20 19 18 17<br>16 15 14 13 12 11 10 9 8 7 6 3 2 1 |
| SALEABLE | NOT APPLICABLE | 34822-0473 | 9 | C | BLUE | 64 63 62 60 59 57 56 55 54 53 51 49 66<br>48 47 46 45 42 39 37 35 33<br>65 32 21 19 18 17<br>16 15 3 2 1 |
| SALEABLE | NOT APPLICABLE | 34822-0483 | 9 | A | BLACK | 64 63 54 53 51 49 66<br>38 37 35 33<br>65 28 24 23 21 20 19 18 17<br>15 14 13 8 7 4 3 2 1 |
| SALEABLE | NOT APPLICABLE | 34566-9273 | 9 | B | ST GRY | 72 71 70 69 68 67 65 64 63 61 60 59 57 56 55 54 53<br>50 49 48 47 46 44 43 42 40 39 36 35 34 33<br>73 32 31 30 29 28 27 26 25 24 23 22 21<br>16 15 14 13 12 11 10 9 7 6 4 3 2 |
| SALEABLE | NOT APPLICABLE | 34822-0493 | 0 | C | BLUE | 64 63 62 60 59 57 56 55 54 53 52 51 50 49 66<br>48 47 46 45 42 39 37 36 35 34 33<br>65 32 30 29 28 27 26 25 24 23 22 21 20 19 18 17<br>16 15 14 13 12 11 10 9 8 7 6 3 2 1 |
| SALEABLE | NOT APPLICABLE | 34566-9283 | 9 | G | BLUE | 80 79 78 71 67<br>60 59 58 57 54 51 50 49 48 47 44 41<br>40 39 37 33 32 30 29 28 27 25 24<br>18 12 11 9 8 5 3 2 |
| SALEABLE | NOT APPLICABLE | 34566-9293 | 9 | G | BLUE | 80 79 78 71 67<br>60 59 58 57 54 51 50 49 48 47 44 41<br>40 39 37 33 32 30 29 28 27 25 24<br>20 19 18 12 11 9 8 5 3 2 |
| SALEABLE | NOT APPLICABLE | 34566-9313 | 9 | A | BLACK | 72 64 62 61 58 57 56 55 54 53<br>52 51 48 46 45 43 41 40 37<br>73 32 30 29 27 25 20<br>16 15 13 11 10 9 4 |

# MX123 52/66/73/80-WAY RECEPTACLE ASSY SEALED PIN OUT SHEET

| STATUS | GM PART # | HRNS CONN ASSY | | | TPA | GROMMET CAP | | | | | | | | | | | | | | | | | |
|---|---|---|---|---|---|---|---|---|---|---|---|---|---|---|---|---|---|---|---|---|---|---|---|
| | | MATERIAL/PART NUMBER | WIRE DRESS OPTION | KEY OPTION Fp | COLOR OPTION Fp | NUMBERS INDICATE CAVITIES OPEN FOR CIRCUITS Fp | | | | | | | | | | | | | | | | | |
| SALEABLE | NOT APPLICABLE | 34566-9323 | 9 | A | BLACK | 72 | | | | | | | | 64 | | 62 | 61 | | 59 | 58 | 57 | 56 | 55 | 54 | 53 |
| | | | | | | 52 | 51 | | | 48 | | 46 | 45 | | 43 | | 41 | 40 | | | 37 | | 35 | 34 | |
| | | | | | | 73 | | | | 32 | | 30 | 29 | | 27 | | 25 | | | | | 20 | | | |
| | | | | | | | | | | 16 | 15 | | 13 | | 11 | 10 | 9 | | | | | 4 | 3 | | |
| SALEABLE | NOT APPLICABLE | 34566-9333 | 9 | A | BLACK | 72 | | | | | | | | 64 | | 62 | 61 | | 59 | 58 | 57 | 56 | 55 | 54 | |
| | | | | | | 52 | 51 | | | 48 | | 46 | 45 | | 43 | | 41 | 40 | | | 37 | | 35 | 34 | |
| | | | | | | 73 | | | | 32 | | 30 | 29 | | 27 | | 25 | | | | | 20 | | | |
| | | | | | | | | | | 16 | 15 | | 13 | | 11 | 10 | 9 | | | | | 4 | | | |
| SALEABLE | NOT APPLICABLE | 34566-9343 | 9 | C | BLUE | 72 | | 70 | 69 | 68 | | 66 | | | 63 | 62 | | | | 58 | | 56 | 55 | | 53 |
| | | | | | | | | | 49 | | | 46 | | | 43 | 42 | | 40 | | 38 | | 36 | 35 | | |
| | | | | | | 73 | | | | | 31 | 30 | 29 | | | 26 | | 24 | | 22 | 21 | 20 | 19 | | 17 |
| | | | | | | | | | | | | | | | | | | | | | | 4 | 3 | 2 | 1 |
| SALEABLE | NOT APPLICABLE | 34822-0503 | 0 | A | BLACK | 64 | | 62 | 61 | 60 | 59 | 58 | | | | 54 | 53 | | 51 | | | 66 | | | |
| | | | | | | 48 | 47 | | | | | | | | | 38 | 37 | 36 | | 34 | | | | | |
| | | | | | | 65 | | | | | | 30 | 29 | 28 | | 26 | | 24 | | | 21 | | | | 17 |
| | | | | | | | | | | | 15 | | 13 | | | | 9 | | 7 | | | 4 | 3 | 2 | 1 |
| SALEABLE | NOT APPLICABLE | 34822-0513 | 9 | A | BLACK | | 63 | 62 | 61 | | 59 | | | | | 54 | 53 | | | | 49 | 66 | | | |
| | | | | | | | | | | | | | | | | 38 | 37 | | 35 | | 33 | | | | |
| | | | | | | 65 | | | | | 31 | | | 28 | | | | 24 | | 22 | 21 | 20 | 19 | 18 | 17 |
| | | | | | | | | | | | 15 | 14 | 13 | 12 | | | | 8 | 7 | | | 4 | 3 | 2 | 1 |
| SALEABLE | NOT APPLICABLE | 34566-9353 | 9 | A | BLACK | 72 | | | | | | | | 64 | | 62 | 61 | | | 58 | 57 | 56 | 55 | 54 | 53 |
| | | | | | | 52 | 51 | | | 48 | | 46 | 45 | | 43 | | 41 | 40 | | | 37 | | 35 | 34 | |
| | | | | | | 73 | | | | 32 | | 30 | 29 | | 27 | | 25 | | | | | 20 | | | |
| | | | | | | | | | | 16 | 15 | | 13 | | 11 | 10 | 9 | | | | | 4 | | | |
| SALEABLE | NOT APPLICABLE | 34566-9363 | 9 | A | BLACK | 72 | | | | | | | | 64 | | 62 | 61 | | | | 57 | 56 | 55 | 54 | 53 |
| | | | | | | 52 | 51 | | | | | 46 | 45 | | 43 | | | 40 | | | 37 | | 35 | 34 | |
| | | | | | | 73 | | | | 32 | | 30 | 29 | | 27 | | 25 | | | | | 20 | | | |
| | | | | | | | | | | 16 | 15 | | 13 | | 11 | 10 | 9 | | | | | 4 | | | |
| SALEABLE | NOT APPLICABLE | 34566-9373 | 9 | G | BLUE | 80 | | | | | | | | | 71 | | | | | 66 | | 64 | | | |
| | | | | | | | 59 | | 57 | | | | | | | | 49 | | | | | | | | |
| | | | | | | | 39 | | | | | | | | | 30 | | | | | | | | | |
| | | | | | | 20 | | | | | | | | | | | | | | | | | | | |
| SALEABLE | NOT APPLICABLE | 34566-9383 | 9 | A | BLACK | 72 | 71 | 70 | 69 | 68 | | | | 64 | 63 | 62 | 61 | | 59 | 58 | 57 | 56 | 55 | 54 | 53 |
| | | | | | | 52 | 51 | 50 | | 48 | 47 | 46 | 45 | 44 | 43 | | 41 | 40 | 39 | 38 | 37 | | 35 | 34 | 33 |
| | | | | | | 73 | | | | 32 | | 30 | 29 | | 27 | 26 | 25 | 24 | | | | 20 | 19 | 18 | 17 |
| | | | | | | | | | | 16 | 15 | 14 | 13 | 12 | 11 | 10 | 9 | 8 | 7 | | | 4 | 3 | 2 | 1 |
| SALEABLE | NOT APPLICABLE | 34566-9393 | 0 | B | ST GRY | 72 | 71 | 70 | 69 | 68 | 67 | | 65 | 64 | 63 | | 61 | 60 | 59 | | 57 | 56 | 55 | 54 | 53 |
| | | | | | | 52 | 51 | 50 | 49 | 48 | 47 | 46 | 45 | 44 | 43 | 42 | | 40 | 39 | | | 36 | 35 | 34 | 33 |
| | | | | | | 73 | | | | 32 | 31 | 30 | 29 | 28 | 27 | 26 | 25 | 24 | 23 | 22 | 21 | 20 | | | |
| | | | | | | | | | | 16 | 15 | 14 | 13 | 12 | 11 | 10 | 9 | 8 | 7 | 6 | | 4 | 3 | 2 | |
| SALEABLE | NOT APPLICABLE | 34566-9413 | 9 | H | ST GRY | | | | | | | | | | | | | | | | | | | | |
| | | | | | | | | | | | | | | | | | | | | | | | | | |
| | | | | | | | | | | | | | | | | | | | | | | | | | |
| | | | | | | | | | | | | | | | | | | | | | | | | | |
| SALEABLE | NOT APPLICABLE | 34566-9423 | 0 | A | BLACK | 72 | 71 | 70 | | | 67 | 66 | | | | | | | | 58 | 57 | 56 | 55 | 54 | 53 |
| | | | | | | 52 | 51 | 50 | | | 47 | 46 | | | | | | | 39 | | 37 | 36 | 35 | | 33 |
| | | | | | | 73 | | | | 32 | 31 | 30 | 29 | 28 | 27 | 26 | | | | | | | | 18 | 17 |
| | | | | | | | | | | 16 | 15 | 14 | 13 | 12 | 11 | 10 | | 8 | 7 | | | | 3 | 2 | 1 |
| SALEABLE | NOT APPLICABLE | 34566-9433 | 0 | B | ST GRY | 72 | 71 | 70 | 69 | 68 | 67 | 66 | 65 | 64 | 63 | | 61 | | | 58 | 57 | 56 | 55 | 54 | 53 |
| | | | | | | 52 | 51 | 50 | 49 | 48 | 47 | 46 | 45 | 44 | | | | 40 | 39 | | 37 | 36 | 35 | 34 | 33 |
| | | | | | | 73 | | | | | | 30 | 29 | 28 | 27 | 26 | 25 | 24 | | | 21 | | | | |
| | | | | | | | | | | 16 | | 14 | 13 | 12 | | 10 | 9 | 8 | | 6 | 5 | | | 2 | 1 |
| SALEABLE | NOT APPLICABLE | 34566-9443 | 9 | B | ST GRY | 72 | 71 | 70 | 69 | 68 | 67 | | 65 | 64 | 63 | 62 | 61 | 60 | 59 | | 57 | 56 | 55 | 54 | 53 |
| | | | | | | | | 50 | 49 | 48 | 47 | 46 | | 44 | 43 | 42 | | 40 | 39 | | | 36 | 35 | 34 | 33 |
| | | | | | | 73 | | | | 32 | 31 | 30 | 29 | 28 | 27 | 26 | 25 | 24 | 23 | 22 | 21 | | | | |
| | | | | | | | | | | 16 | 15 | 14 | 13 | 12 | 11 | 10 | 9 | | 7 | 6 | | 4 | 3 | 2 | |
| SALEABLE | NOT APPLICABLE | 34566-9453 | 0 | A | BLACK | 72 | 71 | 70 | 69 | | 67 | | | 64 | | | 61 | 60 | 59 | | 57 | 56 | 55 | 54 | 53 |
| | | | | | | 52 | 51 | | | 48 | | | 45 | 44 | | | 41 | 40 | 39 | 38 | 37 | 36 | 35 | 34 | |
| | | | | | | 73 | | | | | 31 | 30 | 29 | | 27 | 26 | 25 | | | 22 | | | 19 | 18 | |
| | | | | | | | | | | 16 | 15 | 14 | 13 | 12 | 11 | 10 | 9 | 8 | 7 | 6 | 5 | | | 2 | |

# MX123 52/66/73/80-WAY RECEPTACLE ASSY SEALED PIN OUT SHEET

| STATUS | GM PART # | HRNS CONN ASSY | | | TPA | GROMMET CAP |
|---|---|---|---|---|---|---|
| | | MATERIAL/PART NUMBER | WIRE DRESS OPTION | KEY OPTION Fp | COLOR OPTION Fp | NUMBERS INDICATE CAVITIES OPEN FOR CIRCUITS Fp |
| SALEABLE | NOT APPLICABLE | 34566-9463 | 0 | G | BLUE | 80 79 78 75 66 65 64<br>59 46 43 42 41<br>39 38 37 35 30 26 25 24 22 21<br>20 18 17 16 12 8 7 6 5 3 2 1 |
| SALEABLE | NOT APPLICABLE | 34566-9473 | 0 | G | BLUE | 80 79 78 75 66 65 64 62<br>59 53 46 43 42 41<br>39 38 37 35 30 26 25 24 22 21<br>20 18 17 16 12 8 7 6 5 3 2 1 |
| SALEABLE | NOT APPLICABLE | 34566-9483 | 0 | G | BLUE | 80 79 78 75 66 65 64<br>46 43 42 41<br>39 38 37 35 30 26 25 24 22 21<br>20 18 17 16 12 8 7 6 5 3 2 1 |
| SALEABLE | NOT APPLICABLE | 34566-9493 | 0 | G | BLUE | 80 79 78 75 66 65<br>59 46 43 42 41<br>39 38 37 35 30 26 25 24 22 21<br>20 18 17 16 12 8 7 6 5 3 2 1 |
| SALEABLE | NOT APPLICABLE | 34566-9513 | 0 | G | BLUE | 80 79 78 77 76 75 74 73 72 71 70 69 68 67 66 65 64 63 62 61<br>60 59 58 57 56 55 54 53 52 51 50 49 48 46 43 42 41<br>39 38 37 35 30 26 25 24 22 21<br>20 18 17 16 12 8 7 6 5 3 2 1 |
| SALEABLE | NOT APPLICABLE | 34566-9523 | 0 | G | BLUE | 80 79 78 75 66 65 64 62<br>59 57 53 46 43 42 41<br>39 38 37 35 33 30 26 25 24 22 21<br>20 18 17 16 8 7 6 5 3 2 1 |
| SALEABLE | NOT APPLICABLE | 34822-0523 | 0 | C | BLUE | 64 63 62 60 59 57 56 55 54 53 52 51 50 49<br>48 47 46 45 42 39 37 36 35 34 33 66<br>65 32 30 29 28 27 26 25 24 23 22 19 18 17<br>16 15 14 13 12 11 10 9 8 7 6 3 2 1 |
| SALEABLE | NOT APPLICABLE | 34566-9543 | 0 | A | BLACK | 49 48 47 46 45 44 43 40 38 37 36 34<br>73 32 31 29 28 27 25 24 23 22 20 19 18 17<br>16 15 12 10 9 6 5 2 1 |
| SALEABLE | NOT APPLICABLE | 34566-9553 | 0 | C | BLUE | 52 51 50 49 66 65 64 63 62 60 59 57 56 55 54 53<br>48 47 46 45 42 39 37 36 35 34 33<br>73 32 30 29 28 27 26 25 24 23 22 19 18 17<br>16 15 14 13 12 11 10 9 8 7 6 3 2 1 |
| SALEABLE | NOT APPLICABLE | 34566-9563 | 0 | C | BLUE | 72 71 70 69 67 66 65 64 60 56 54<br>52 51 50 49 48 47 46 45 44 40 39 38 34<br>73 31 30 28 26 25 24 23 22 21 20 17<br>16 15 14 13 12 9 8 7 6 5 4 |
| SALEABLE | NOT APPLICABLE | 34566-9573 | 0 | B | ST GRY | 72 71 70 69 68 67 65 64 63 61 60 59 57 56 55 54 53<br>52 51 50 49 48 47 46 45 44 43 42 40 39 36 35 34 33<br>73 32 31 30 29 28 27 26 25 24 23 22 21<br>16 15 14 13 12 11 10 9 8 7 6 4 3 2 |
| SALEABLE | NOT APPLICABLE | 34566-9583 | 0 | B | ST GRY | 72 71 70 69 68 67 66 65 64 63 61 60 59 57 56 55 54<br>52 51 50 49 48 47 46 45 44 43 41 40 39 38 37 36 35 34 33<br>73 32 31 30 29 28 26 24 23 22 21 20 19 18 17<br>16 15 14 13 12 9 8 7 6 5 4 3 2 1 |
| SALEABLE | NOT APPLICABLE | 34566-9593 | 0 | A | BLACK | 72 70 67 63 60 59 58 57 56 55<br>52 51 48 47 43 42 40 39 38 37 36 35<br>73 28 27 18 17<br>12 11 9 7 2 1 |
| SALEABLE | NOT APPLICABLE | 34566-9613 | 0 | C | BLUE | 71 70 69 67 66 65 64 60 56<br>52 51 50 49 47 46 45 44 40 39 34<br>73 31 30 28 26 25 24 23 22 21 20 19 18 17<br>16 15 14 13 12 9 8 7 6 5 4 |
| SALEABLE | NOT APPLICABLE | 34566-9623 | 9 | B | ST GRY | 72 71 70 64 63 61 58 57 56 55<br>52 51 50 43 38 37 36<br>73 32 30 29 28 26 25 24 23 22 21 20<br>16 14 13 11 10 9 8 7 6 5 4 |

# MX123 52/66/73/80-WAY RECEPTACLE ASSY SEALED PIN OUT SHEET

| STATUS | GM PART # | HRNS CONN ASSY | | | TPA | GROMMET CAP |
|---|---|---|---|---|---|---|
| | | MATERIAL/PART NUMBER | WIRE DRESS OPTION | KEY OPTION Fp | COLOR OPTION Fp | NUMBERS INDICATE CAVITIES OPEN FOR CIRCUITS Fp |
| SALEABLE | NOT APPLICABLE | 34566-9633 | 9 | B | ST GRY | 72 71 70 69 68 67 65 64 63 61 60 59 57 56 55 54 53<br>52 51 50 49 48 47 46 45 44 43 42 40 39 36 35 34 33<br>73 32 31 30 29 28 27 26 25 24 23 22 21 20<br>16 15 14 13 12 11 10 9 7 6 3 2 |
| SALEABLE | NOT APPLICABLE | 34566-9643 | 9 | A | BLACK | 69 64 63 61 59<br>52 48 44 43 41 39 38 35 34<br>73 30 29<br>10 5 2 |
| SALEABLE | NOT APPLICABLE | 34566-9653 | 9 | G | BLUE | 80 66 65<br>59 57<br>39 30<br>20 |
| SALEABLE | NOT APPLICABLE | 34566-9663 | 0 | B | ST GRY | 72 71 70 69 68 67 66 65 64 63 61 58 57 56 55 54 53<br>52 51 50 49 48 47 46 45 44 40 37 36 35 34 33<br>73 32 30 29 28 26 25 24 21<br>16 14 13 12 10 9 8 6 5 2 1 |
| SALEABLE | NOT APPLICABLE | 34822-0533 | 9 | C | BLUE | 64 63 60 59 57 56 55 53 52 51 50 49 66<br>48 47 46 45 42 39 38 36 35 34 33<br>65 32 30 29 28 27 26 25 24 23 22 20 18 17<br>16 14 13 12 11 10 9 8 7 6 3 2 1 |
| SALEABLE | NOT APPLICABLE | 34822-0543 | 0 | A | BLACK | 64 63 62 61 60 59 54 53 51 49 66<br>47 38 37 35 33<br>65 28 25 24 22 21 20 19 18 17<br>15 14 13 12 8 7 4 3 2 1 |
| SALEABLE | NOT APPLICABLE | 34822-0553 | 0 | A | BLACK | 64 63 54 53 51 49 66<br>38 37 35 33<br>65 31 28 24 23 21 20 19 18 17<br>15 14 13 8 7 4 3 2 1 |
| SALEABLE | NOT APPLICABLE | 34822-0563 | 0 | C | BLUE | 64 63 62 60 59 57 56 55 54 53 52 51 50 49 66<br>48 47 46 45 42 39 37 36 35 34 33<br>65 32 30 29 28 27 26 24 23 22 19 18 17<br>16 15 14 13 12 11 10 9 8 7 6 3 2 1 |
| SALEABLE | NOT APPLICABLE | 34566-9673 | 0 | C | BLUE | 72 71 70 69 67 66 65 64 60 56 54<br>52 51 50 49 47 46 45 44 40 39 38 34<br>73 31 30 28 26 25 24 23 22 21 20 17<br>16 15 14 13 12 9 8 7 6 5 4 |
| SALEABLE | NOT APPLICABLE | 34566-9683 | 0 | B | ST GRY | 72 71 70 69 68 67 66 65 64 63 61 60 57 56 55 54<br>52 51 50 49 48 47 46 45 44 43 41 40 38 37 36 35 33<br>73 32 31 30 29 28 26 24 23 22 21 20 19 17<br>16 15 14 13 12 9 8 7 6 5 4 3 1 |
| SALEABLE | NOT APPLICABLE | 34566-9693 | 0 | A | BLACK | 72 70 67 63 60 59 58 57 56 55 53<br>52 51 48 47 43 42 40 39 38 37 36 35 33<br>73 28 18 17<br>12 11 2 1 |
| SALEABLE | NOT APPLICABLE | 34566-9713 | 0 | B | ST GRY | 68 67 66 65 64 59 58 57 55 54 53<br>51 50 49 48 46 45 43 42 40 39 38 37 35 33<br>73 32 31 30 26 24 23 22 20<br>16 13 10 9 8 7 6 5 4 3 2 |
| SALEABLE | NOT APPLICABLE | 34566-9723 | 0 | B | ST GRY | 72 71 70 69 68 67 66 65 64 63 61 58 57 56 55<br>52 51 50 49 48 47 46 45 43 40 37 36<br>73 32 30 29 28 26 25 24 21 19<br>16 14 13 12 11 10 9 8 6 5 |
| SALEABLE | NOT APPLICABLE | 34566-9733 | 0 | A | BLACK | 72 71 70 67 66 59 53<br>52 51 50 47 46 39 37 35 33<br>73 30 29 28 27 26 24 23 21 17<br>16 13 11 10 8 7 3 1 |
| SALEABLE | NOT APPLICABLE | 34822-0573 | 0 | A | BLACK | 64 63 54 53 51 49 66<br>38 37 35 33<br>65 28 24 22 20 19 18 17<br>15 14 13 12 8 7 4 3 2 1 |

molex

# MX123 52/66/73/80-WAY RECEPTACLE ASSY SEALED PIN OUT SHEET

| STATUS | GM PART # | HRNS CONN ASSY | | | TPA | GROMMET CAP |
|---|---|---|---|---|---|---|
| | | MATERIAL/PART NUMBER | WIRE DRESS OPTION | KEY OPTION Fp | COLOR OPTION Fp | NUMBERS INDICATE CAVITIES OPEN FOR CIRCUITS Fp |
| SALEABLE | NOT APPLICABLE | 34822-0583 | 0 | A | BLACK | 65 |
| SALEABLE | NOT APPLICABLE | 34822-0593 | 0 | A | BLACK | 65 |
| SALEABLE | NOT APPLICABLE | 34566-9743 | 0 | B | ST GRY | 73 |
| SALEABLE | NOT APPLICABLE | 34566-9753 | 0 | C | BLUE | 73 |
| SALEABLE | NOT APPLICABLE | 34566-9763 | 0 | G | BLUE | |
| SALEABLE | NOT APPLICABLE | 34566-9773 | 0 | A | BLACK | 73 |
| SALEABLE | NOT APPLICABLE | 34566-9783 | 0 | B | ST GRY | 73 |
| SALEABLE | NOT APPLICABLE | 34822-0603 | 0 | C | BLUE | 65 |
| SALEABLE | NOT APPLICABLE | 34822-0613 | 0 | A | BLACK | 65 |
| SALEABLE | NOT APPLICABLE | 34566-9793 | 9 | B | ST GRY | 73 |
| SALEABLE | NOT APPLICABLE | 34566-9813 | 9 | A | BLACK | 73 |
| SALEABLE | NOT APPLICABLE | 34822-0623 | 0 | A | BLACK | 65 |
| SALEABLE | NOT APPLICABLE | 34566-9823 | 0 | A | BLACK | 73 |
| SALEABLE | NOT APPLICABLE | 34822-0633 | 0 | A | BLACK | 65 |
| SALEABLE | NOT APPLICABLE | 34822-0643 | 9 | C | BLUE | 65 |

molex

# MX123 52/66/73/80-WAY RECEPTACLE ASSY SEALED PIN OUT SHEET

| STATUS | GM PART # | HRNS CONN ASSY | | | TPA | GROMMET CAP |
|---|---|---|---|---|---|---|
| | | MATERIAL/PART NUMBER | WIRE DRESS OPTION | KEY OPTION Fp | COLOR OPTION Fp | NUMBERS INDICATE CAVITIES OPEN FOR CIRCUITS Fp |
| SALEABLE | NOT APPLICABLE | 34822-0653 | 0 | A | BLACK | 64 63 62 61 59 49<br>38 37 35 33<br>65 31 28 24 22 21 20 19 18 17<br>15 14 13 12 8 7 4 3 2 1 |
| SALEABLE | NOT APPLICABLE | 34566-9833 | 9 | B | ST GRY | 72 71 70 69 68 67 64 63 61 58 57 56 55 54 53<br>52 51 50 49 48 47 44 43 41 38 37 36 33<br>73 32 30 29 28 26 25 24 23 22 21 20<br>16 14 13 12 10 9 8 7 6 5 4 |
| SALEABLE | NOT APPLICABLE | 34566-9843 | 9 | A | BLACK | 72 71 70 67 66 65 64 63 62 61 59 55 54 53<br>52 51 50 47 46 45 44 43 42 41 40 39 37 36 35 34 33<br>73 30 29 18 17<br>13 8 7 3 1 |
| SALEABLE | NOT APPLICABLE | 34566-9853 | 9 | B | ST GRY | 72 71 70 69 68 67 65 64 63 62 61 60 59 58 57 56 55 54 53<br>52 51 50 49 48 47 46 45 44 43 42 40 39 36 35 34 33<br>73 32 31 30 29 28 27 26 25 24 23 22 21 20<br>16 15 14 13 12 11 10 9 7 6 3 2 |
| SALEABLE | NOT APPLICABLE | 34566-9863 | 0 | B | ST GRY | 72 71 70 69 68 67 65 64 63 62 61 60 59 57 56 55 54 53<br>52 51 50 49 48 47 46 45 44 43 42 40 39 36 35 34 33<br>73 32 31 30 29 28 27 26 25 24 23 22 21<br>16 15 14 13 12 11 10 9 8 7 6 3 2 |
| SALEABLE | NOT APPLICABLE | 34566-0004 | 0 | A | BLACK | 72 71 70 69 67 64 63 61 60 59 57 56 55 54 53<br>52 51 48 45 44 43 41 40 39 38 37 36 35 34 33<br>73 31 30 29 27 26 25 22 19 18<br>16 15 14 13 12 11 10 9 8 7 6 5 2 1 |
| SALEABLE | NOT APPLICABLE | 34566-0014 | 0 | G | BLUE | 80 79 78 77 75 66 65 64 62<br>59 57 46 43 42 41<br>39 38 37 35 33 26 25 24 22 21<br>20 18 17 16 15 12 8 7 6 5 3 2 1 |
| SALEABLE | NOT APPLICABLE | 34566-0024 | 0 | G | BLUE | |
| SALEABLE | NOT APPLICABLE | 34566-0034 | 0 | G | BLUE | 80 79 78 75 66 65 64 62<br>59 57 53 46 43 42 41<br>39 38 37 35 33 26 25 24 22 21<br>20 18 17 16 12 8 7 6 5 3 2 1 |
| SALEABLE | NOT APPLICABLE | 34566-0044 | 0 | A | BLACK | 72 71 70 69 67 64 61 60 59 57 56 55 54 53<br>52 51 48 45 44 41 40 39 38 37 36 35 34 33<br>73 31 30 29 27 26 25 22 19 18<br>16 15 14 13 12 11 10 9 8 7 6 5 3 2 |
| SALEABLE | NOT APPLICABLE | 34566-0054 | 0 | G | BLUE | 80 79 78 77 75 66 65 64 62<br>59 57 46 43 42 41<br>39 38 37 35 33 26 25 24 22 21<br>20 18 17 16 15 12 8 7 6 5 3 2 1 |
| SALEABLE | NOT APPLICABLE | 34566-0064 | 0 | A | BLACK | 72 71 70 69 67 64 63 61 60 59 57 56 55 54 53<br>52 51 48 45 44 43 41 40 39 38 37 36 35 34<br>73 31 30 29 27 26 25 22 19 18<br>16 15 14 13 12 11 10 9 8 7 6 5 2 1 |
| SALEABLE | NOT APPLICABLE | 34566-0084 | 0 | A | BLACK | 70 69 67 64 61 60 59 57 56 55 54 53<br>52 51 48 45 44 41 40 39 38 37 36 35 34 33<br>73 31 30 29 27 26 25 22 19<br>16 15 14 13 12 11 10 8 7 6 5 3 2 |
| SALEABLE | NOT APPLICABLE | 34566-0094 | 0 | B | ST GRY | 72 71 70 69 68 67 65 64 63 62 61 60 59 57 56 55 54 53<br>52 51 50 49 48 47 46 45 44 43 42 40 39 36 35 34 33<br>73 32 31 30 29 28 27 26 25 24 23 22 21<br>16 15 14 13 12 11 10 9 7 6 4 3 2 |
| SALEABLE | NOT APPLICABLE | 34566-0104 | 0 | B | ST GRY | 72 71 70 69 68 67 65 64 63 62 61 60 59 57 56 55 54 53<br>50 49 48 47 46 44 43 42 40 39 36 35 34 33<br>73 32 31 30 29 28 27 26 25 24 23 22 21<br>16 15 14 13 12 11 10 9 7 6 4 3 2 |

molex

# MX123 52/66/73/80-WAY RECEPTACLE ASSY SEALED PIN OUT SHEET

| STATUS | GM PART # | HRNS CONN ASSY | | | TPA | GROMMET CAP |
|---|---|---|---|---|---|---|
| | | MATERIAL/PART NUMBER | WIRE DRESS OPTION | KEY OPTION Fp | COLOR OPTION Fp | NUMBERS INDICATE CAVITIES OPEN FOR CIRCUITS Fp |
| SALEABLE | NOT APPLICABLE | 34566-0114 | 0 | B | ST GRY | 72 71 70 69 — — — — 64 63 — 61 — — 58 57 56 55 — —<br>52 51 50 49 — — — — — 43 — — — — 38 37 36 — — 33<br>73 — 32 — 30 29 28 — 26 25 24 23 22 21 20 — — —<br>— 16 15 14 13 12 11 10 9 8 7 6 5 4 — — 1 |
| SALEABLE | NOT APPLICABLE | 34566-0124 | 0 | B | ST GRY | 72 — — — — — — — 62 61 60 59 — — — 55 — —<br>52 — — — 48 47 46 — — — — — 40 — — — — — 33<br>73 — — 30 — — — — — — 22 21 20 19 18 17<br>— 16 15 14 — — — — — — 6 — 4 3 — — |
| SALEABLE | NOT APPLICABLE | 34566-0134 | 0 | B | ST GRY | 72 — — — — — — — 62 61 60 59 — — — 55 — —<br>52 — — — 48 47 46 — — — — 41 40 — 38 37 36 35 — —<br>73 — — 30 — — — — — — 22 21 20 19 18 —<br>— 16 15 14 — — — — — — 6 — 4 3 — 1 |
| SALEABLE | NOT APPLICABLE | 34566-0144 | 9 | B | ST GRY | — — — — — — 66 — — — — — — — 58 — — — —<br>— — — — — — — — — — — 41 — — 38 37 — — — —<br>73 — — — — — — — — — — — — — 20 19 18 17<br>— — — — — — — — — — — — 8 — — 5 4 — — 1 |
| SALEABLE | NOT APPLICABLE | 34822-0663 | 9 | C | BLUE | — — — 61 60 — 58 — — — 54 — — — — — 66<br>— — — — 44 43 — — — — — 37 — — — — — —<br>65 — 31 — — — — — — — — — 21 20 19 — —<br>— — — — — — — — — — — — — 5 4 — — — |
| SALEABLE | NOT APPLICABLE | 34822-0673 | 0 | A | BLACK | 64 — — — — — 58 57 56 55 — — 52 51 50 — 66<br>48 47 46 45 44 43 42 41 40 39 — — 36 — 34 —<br>65 — 32 — 30 29 — 27 26 25 — — — — — — — —<br>— — 16 — — — 12 11 10 9 — — 6 5 — — — — |
| SALEABLE | NOT APPLICABLE | 34822-0683 | 9 | A | BLACK | — 63 62 61 60 59 — — — — 54 53 — — — 49 66<br>— — — — 44 — — — — — 38 37 — 35 — 33<br>65 — 31 — — 28 — — — 24 23 22 21 20 19 18 17<br>— — 15 14 13 — — — — 8 7 — — 4 3 2 1 |
| SALEABLE | NOT APPLICABLE | 34822-0693 | 9 | C | BLUE | — — 62 61 — — 58 — — — 54 — — — — — 66<br>— — — — 44 43 — 41 40 — — 37 — — — — —<br>65 — 31 — — — — — — — — — 20 19 — —<br>— — — — — — — — — — — — 5 4 — — |
| SALEABLE | NOT APPLICABLE | 34566-0154 | 9 | B | ST GRY | 72 71 70 69 68 67 66 65 64 63 62 61 60 59 — 57 56 55 54 53<br>52 51 50 49 48 47 46 45 44 43 42 — 40 39 — — 36 35 34 33<br>73 — 32 31 30 29 28 27 26 25 24 23 22 21 — — — —<br>— 16 15 14 13 12 11 10 9 8 7 6 — — 3 2 — |
| SALEABLE | NOT APPLICABLE | 34566-0164 | 0 | G | BLUE | 80 79 78 77 — 75 — — — — — — — — 66 65 64 — 62 —<br>— 59 — 57 — — — 53 — — — — — — 46 — 44 43 42 41<br>— 39 38 37 — 35 — 33 32 — 30 — — — 26 25 24 — 22 21<br>20 — 18 17 16 — — — 12 11 — — 8 7 6 5 — 3 2 1 |
| SALEABLE | NOT APPLICABLE | 34566-0174 | 9 | B | ST GRY | 72 71 70 — — 67 66 — — — — — 60 — — 57 — — — 53<br>52 51 50 — — 47 46 — — — — — — 39 — 37 — 35 — 33<br>73 — — 30 29 28 — — 25 24 23 22 — 20 19 — 17<br>— — — — 13 12 — — — 8 7 — — — 3 — 1 |
| SALEABLE | NOT APPLICABLE | 34566-0184 | 9 | B | ST GRY | 72 71 70 69 68 67 66 65 64 63 — 61 — — 58 57 56 55 54 53<br>52 51 50 49 48 47 46 45 44 43 42 41 40 — — 37 36 — — —<br>73 — 32 — 30 29 28 — 26 25 24 — — 21 — — — —<br>— 16 — 14 13 12 11 10 9 8 — 6 5 — — — 1 |