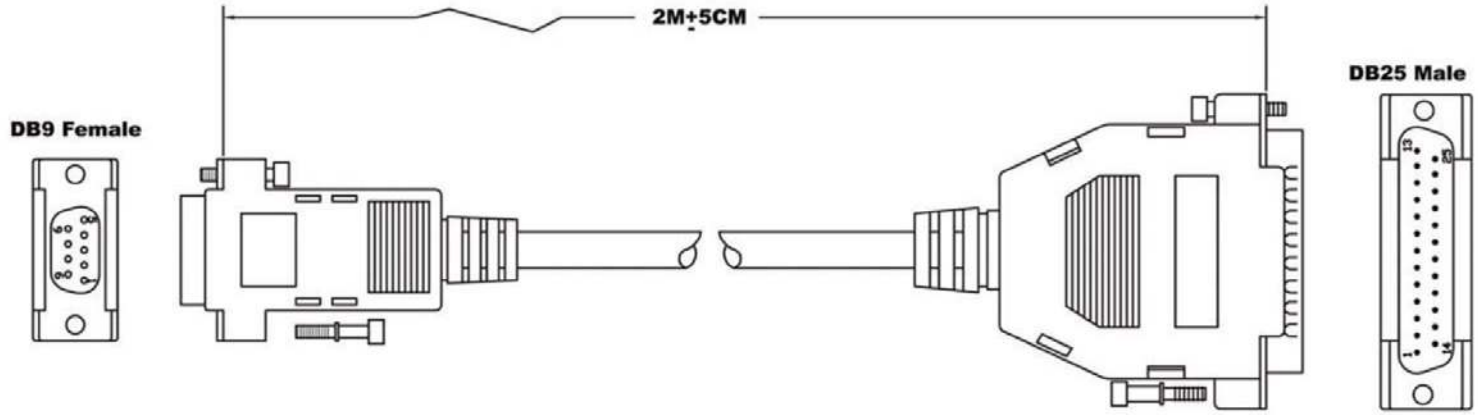

Configuration:

DB9F		DB25M
1	———	8
2	———	3
3	———	2
4	———	20
5	———	7
6	———	6
7	———	4
8	———	5
9	———	22
Shield	———	Shield

Material:

1.Cable: #28 9C+1+AL/MY (Beige PVC Jacket) O.D:6.0MM
2.Both connectors with normal type
3.Screw(Metal): #4-40UNC Type
4.Assembly(Speed Hood) Type

Notes:

1.Total Length: 2M±5CM
2.Color: Beige
3.Assembly Type

RoHS Complaint

Scale	1:1
TOLERANCE	
X.X	±0.40
X.XX	±0.25
X.XXX	±0.15
Angle	±3°

Modification	Date	Name

		Name
Drawn	11.14.11	Chappell
Approved		

ASSMANN WSW components

Item No. **AK125-2 (2.0 M)**
AK128-.25 (0.25M)

Title
Null Modern Cable (AT),
D-Sub 9 Pin Female to D-Sub 25 Pin Male

Drawing No.

rev00

Replace

Sheet