MATERIAL AND FINISH:
Insulator: Polycarbonate, UL-94V-0 rated
Contacts: Brass, Nickel plated

ELECTRICAL SPECIFICATIONS:
Current rating: 16 A
Voltage rating: 250 VAC
Current rating: 20 A
Voltage rating: 250 VAC
Insulation resistance: 100 Mohm min. at 500 VDC
Dielectric withstanding voltage: 2000 VAC for one minute

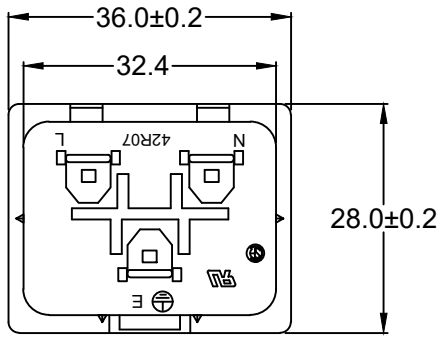

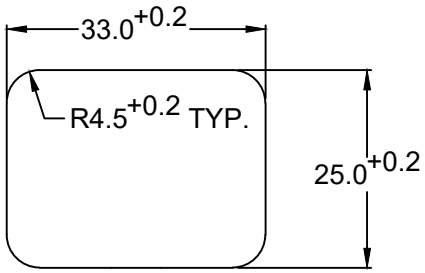

RECOMMENDED PANEL CUTOUT

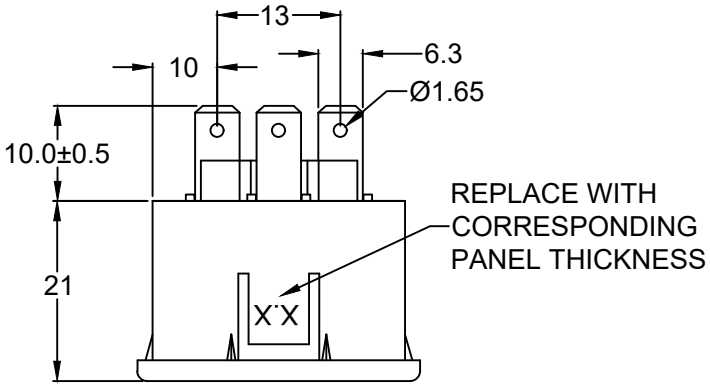

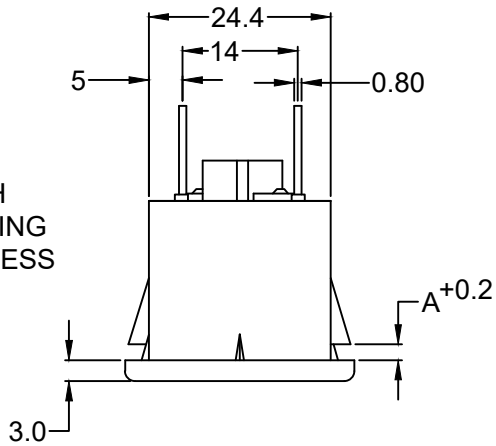

ORDERING CODE:
42R07-3 __ 2 __ - __ __ __
1 2 3

1) COLOR
1 = BLACK
2 = GRAY

2) ELECTRICAL CIRCUIT CONFIGURATION

1 = 20A 250V 70°C 2+GROUND

2 = 20A 250V 155°C 2+GROUND

3 = 20A 250V 70°C 2 POLE

3) PANEL THICKNESS

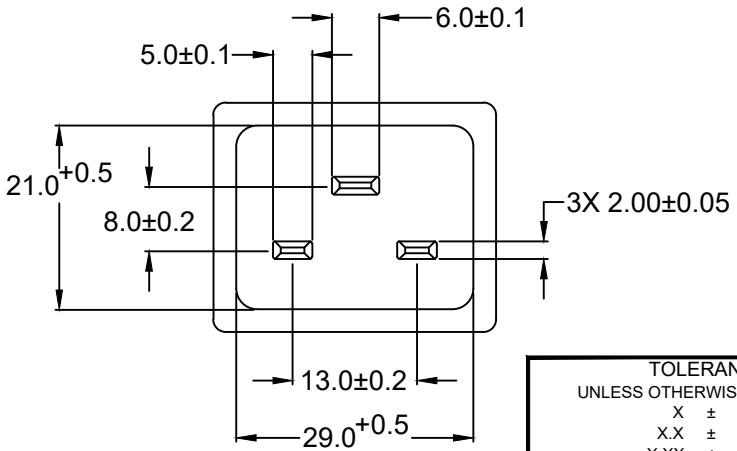

42R07-3X21-XXX SHOWN

P/N	A	MAX. PANEL THICKNESS
42R07-3X2X-150	1.5	1.5
42R07-3X2X-200	2.0	2.0
42R07-3X2X-250	2.5	2.5

ADDITIONAL PANEL THICKNESS AVAILABLE ON REQUEST

REV	DATE	CHANGE	CHNG	CHCK	APPR
A	11/24/04	ADD 13.0, 9.7, 13.6, 5.0 DIM	TD	PB	PB
B	12/2/04	CHG REF DIM TO DIM	TD	PB	PB
C	8/3/07	2 POLE ORDERING CODE WAS 4	PB	PB	

REVISIONS

RoHS COMPLIANT

TOLERANCE
UNLESS OTHERWISE SPECIFIED
X ± 1
X.X ± 0.4
X.XX ± 0.20

DRAWN BY	GQ	DATE:	08/24/01
CHECK BY	TD	DATE:	08/29/01
APPR BY	PB	DATE:	08/29/01

Power Dynamics, Inc.
Phone: 973 560-0019 Whippany, New Jersey Fax: 973 560-0076

PART: 16/20A IEC 60320 APPL. INLET; QC TERMINALS; SNAP-IN, PANEL MOUNT

PART #: 42R07-3X2X-XXX

SHEET 1 of 1

SIZE: A

SCALE: NTS

ALL DIMENSIONS FOR REFERENCE ONLY
DIMENSIONS ARE IN MILLIMETERS

REV: C