used for: D-SUB

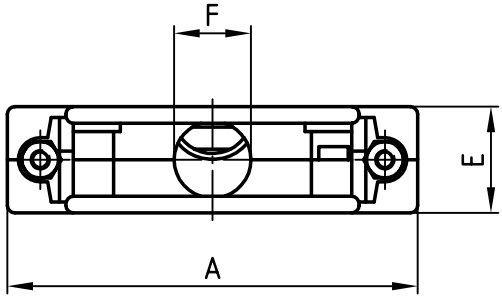

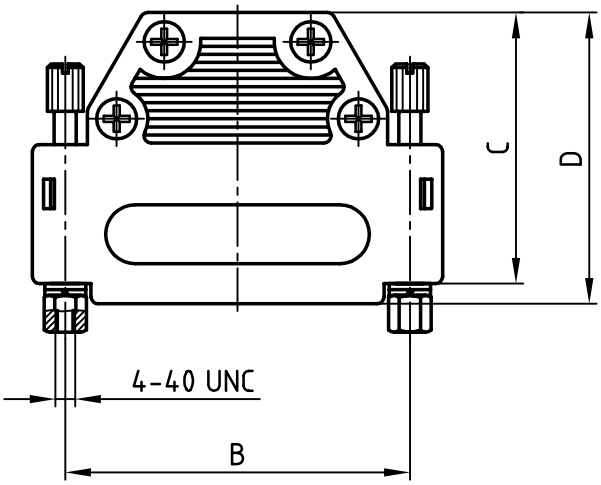

No. of pos.	A	B	C	D	E	F	Part No:
9	34.0	25.0	25.0	27.75	14.5	8.5	**165X14209X**
15	42.3	33.3	37.0	39.75	14.5	10.0	**165X14219X**
25	56.0	47.0	37.0	39.75	14.5	10.5	**165X14229X**
37	72.5	63.5	37.0	39.75	14.5	10.5	**165X14239X**
50	70.0	61.1	50.0	50.00	21.0	10.5	**165X14249X**

NOTES:

1. HOOD MATERIAL: POLYAMID + GF / GREY
2. SCREWLOCK: MATERIAL: BRASS NICKEL-PLATING

Directive 2002/95/EC „RoHS" Compliant

THIS DRAWING MAY NOT BE COPIED OR REPRODUCED IN ANY WAY, AND MAY NOT BE PASSED ON TO A THIRD PARTY WITHOUT WRITTEN PERMISSION. OWNERSHIP AND COPYRIGHT OF CONEC GmbH

DO NOT ALTER CAD DRAWING BY HAND

rev.	description	date	name

tolerance

2002	date	name
drawn	04.03.	Schmidt
appd.	04.03.	Mickenbecker
norm		
d-old	KAT1IY5A	

CONEC®

scale: 1:1

material: SEE NOTES

title: PLASTIC HOOD
with straight cable exit
and screw lock, 9 - 50 pos.

dwg no: 16K1A671

AutoCAD 2000

DIN-A 4

sh: 1/1

part no: SEE TABLE