Alle Rechte vorbehalten/ *All rights reserved*

Harnessing dimensions

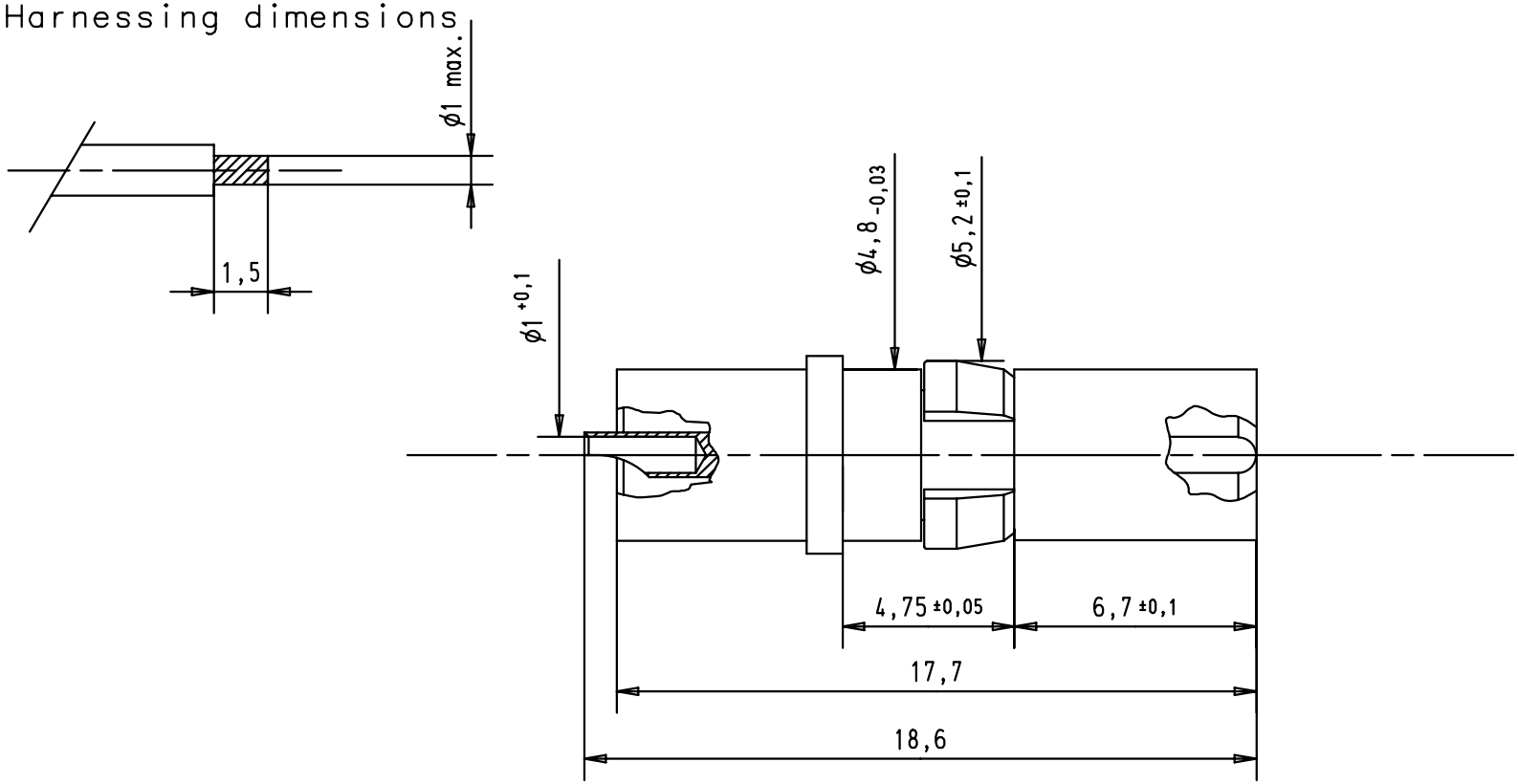


| | Plating |
|---|---|
| Mating area | 1,3 µm Au |
| Termination area | 1,3 µm AU |

| | Dat. | Name |
|---|---|---|
| Detail. | 02/01/02 | AF |
| Insp. | | |
| Stand. | | |

All Dim. in mm
Orig. Size DIN A 4

Female High voltage contact, straight cable termination for AWG 20, solder

Maßstab/ *Scale* 5:1

| Mod. | Dat. | Name |
|---|---|---|
| 29742 | 02/01/02 | AF |

HARTING EURL
F-95972 Paris

TB 09 69 181 2550

Sub.

Blatt/ *Page* 1/1