LM27966 White LED Driver with I2C Compatible Interface

Check for Samples: LM27966

FEATURES

- **91% Peak LED Drive Efficiency**
- **No Inductor Required**
- **0.3% Current Matching**
- **Drives 6 LEDs with up to 30mA per LED**
- **180mA of total driver current**
- **I^2C Compatible Brightness Control Interface**
- **Adaptive 1×- 3/2× Charge Pump**
- **Resistor-Programmable Current Settings**
- **External Chip RESET Pin ($\overline{RESET}$)**
- **Extended Li-Ion Input: 2.7V to 5.5V**
- **Small low profile industry standard leadless package, WQFN 24 : (4mm x 4mm x 0.8mm)**

APPLICATIONS

- **Mobile Phone Display Lighting**
- **PDAs Backlighting**
- **General LED Lighting**

DESCRIPTION

The LM27966 is a highly integrated charge-pump-based display LED driver. The device can drive up to 6 LEDs in parallel with a total output current of 180mA. Regulated internal current sources deliver excellent current and brightness matching in all LEDs.

The LED driver current sources are split into two independently controlled groups. The primary group, which can be configured with 4 or 5 LEDs, can be used to backlight the main phone display. An additional, independently controlled led driver is provided for driving an indicator or other general purpose LED function. The LM27966 has an I^2C compatible interface that allows the user to independently control the brightness on each bank of LEDs.

The device provides excellent efficiency without the use of an inductor by operating the charge pump in a gain of 3/2, or in Pass-Mode. The proper gain for maintaining current regulation is chosen, based on LED forward voltage, so that efficiency is maximized over the input voltage range.

The LM27966 is available in a small 24-pin Leadless Leadframe WQFN-24 package.

Typical Application Circuit

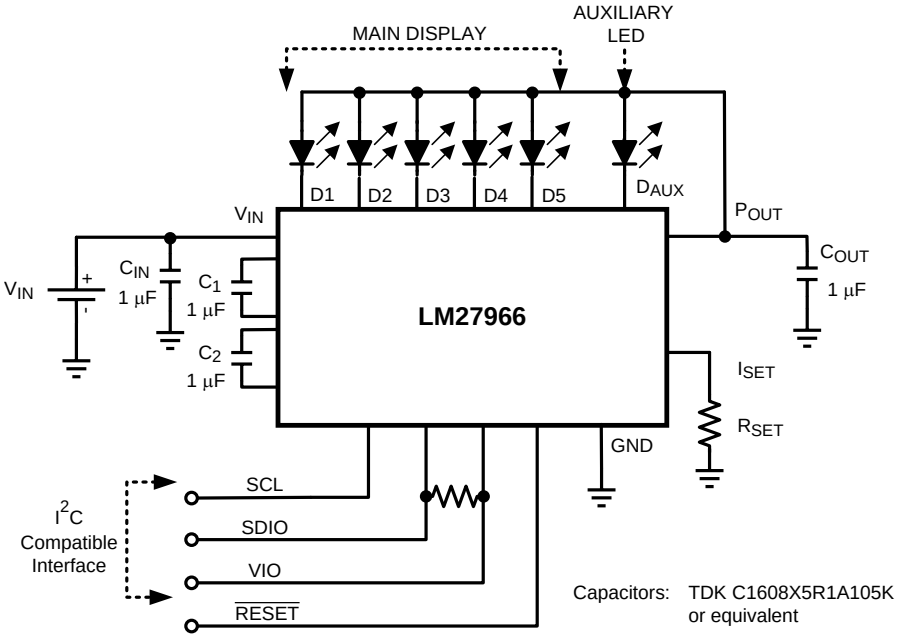

Please be aware that an important notice concerning availability, standard warranty, and use in critical applications of Texas Instruments semiconductor products and disclaimers thereto appears at the end of this data sheet.

All trademarks are the property of their respective owners.

PRODUCTION DATA information is current as of publication date. Products conform to specifications per the terms of the Texas Instruments standard warranty. Production processing does not necessarily include testing of all parameters.

Copyright © 2006–2013, Texas Instruments Incorporated

Connection Diagram

24 Pin Quad WQFN Package
See Package Number RTW0024A

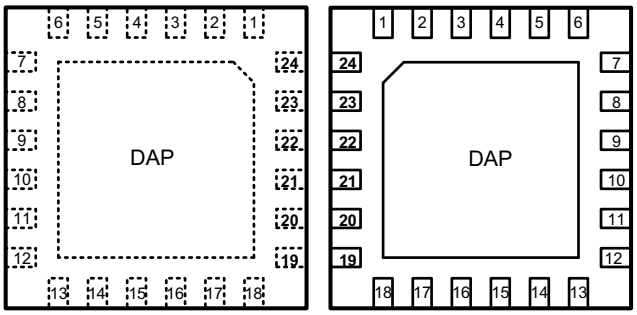

Top View Bottom View

Pin Descriptions

Pin Name	Pin No.	Description
V_{IN}	24	Input voltage. Input range: 2.7V to 5.5V.
P_{OUT}	23	Charge Pump Output Voltage
C1, C2	19, 22 (C1) 20, 21 (C2)	Flying Capacitor Connections
D5, D4, D3, D2, D1	12, 13, 14, 15, 16	LED Drivers - Main Display
D_{AUX}	3	LED Driver - Indicator LED
I_{SET}	17	Placing a resistor (R_{SET}) between this pin and GND sets the full-scale LED current for Dx , and D_{AUX} LEDs. LED Current = 200 × (1.25V ÷ R_{SET})
SCL	1	Serial Clock Pin
SDIO	2	Serial Data Input/Output Pin
VIO	7	Serial Bus Voltage Level Pin
$\overline{RESET}$	10	Harware Reset Pin. High = Normal Operation, Low = RESET
GND	9, 18, DAP	Ground
NC	4, 5, 6, 8, 11	No Connect

These devices have limited built-in ESD protection. The leads should be shorted together or the device placed in conductive foam during storage or handling to prevent electrostatic damage to the MOS gates.

Copyright © 2006–2013, Texas Instruments Incorporated

Absolute Maximum Ratings [1] [2] [3]

V_{IN} pin voltage	-0.3V to 6.0V
SCL, SDIO, VIO, $\overline{RESET}$ pin voltages	-0.3V to (V_{IN}+0.3V)w/ 6.0V max
I_{Dx} Pin Voltages	-0.3V to (V_{POUT}+0.3V)w/ 6.0V max
Continuous Power Dissipation [4]	Internally Limited
Junction Temperature (T_{J-MAX})	150ºC
Storage Temperature Range	-65ºC to +150º C
Maximum Lead Temperature (Soldering)	[5]
ESD Rating [6] Human Body Model	2.0kV

(1) Absolute Maximum Ratings indicate limits beyond which damage to the component may occur. Operating Ratings are conditions under which operation of the device is ensured. Operating Ratings do not imply ensured performance limits. For ensured performance limits and associated test conditions, see the Electrical Characteristics tables.
(2) All voltages are with respect to the potential at the GND pin.
(3) **If Military/Aerospace specified devices are required, please contact the Texas Instruments Sales Office / Distributors for availability and specifications.**
(4) Internal thermal shutdown circuitry protects the device from permanent damage. Thermal shutdown engages at T_J = 170°C (typ.) and disengages at T_J = 165°C (typ.).
(5) For detailed soldering specifications and information, please refer to Application Note 1187: Leadless Leadframe Package (AN-1187).
(6) The human body model is a 100pF capacitor discharged through 1.5kΩ resistor into each pin. (MIL-STD-883 3015.7)

Operating Rating [1] [2]

Input Voltage Range	2.7V to 5.5V
LED Voltage Range	2.0V to 4.0V
Junction Temperature (T_J) Range	-30°C to +100°C
Ambient Temperature (T_A) Range [3]	-30°C to +85°C

(1) Absolute Maximum Ratings indicate limits beyond which damage to the component may occur. Operating Ratings are conditions under which operation of the device is ensured. Operating Ratings do not imply ensured performance limits. For ensured performance limits and associated test conditions, see the Electrical Characteristics tables.
(2) All voltages are with respect to the potential at the GND pin.
(3) In applications where high power dissipation and/or poor package thermal resistance is present, the maximum ambient temperature may have to be derated. Maximum ambient temperature (T_{A-MAX}) is dependent on the maximum operating junction temperature ($T_{J-MAX-OP}$ = 100°C), the maximum power dissipation of the device in the application (P_{D-MAX}), and the junction-to ambient thermal resistance of the part/package in the application (θ_{JA}), as given by the following equation: $T_{A-MAX} = T_{J-MAX-OP} – (\theta_{JA} \times P_{D-MAX})$.

Thermal Properties

Juntion-to-Ambient Thermal Resistance (θ_{JA}), RTW0024A Package [1]	41.3°C/W

(1) Junction-to-ambient thermal resistance is highly dependent on application and board layout. In applications where high maximum power dissipation exists, special care must be paid to thermal dissipation issues in board design. For more information, please refer to Application Note 1187: Leadless Leadframe Package (AN-1187).

Copyright © 2006–2013, Texas Instruments Incorporated

Electrical Characteristics

(1)(2) Limits in standard typeface are for T_J = 25°C, and limits in boldface type apply over the full operating temperature range. Unless otherwise specified: V_{IN} = 3.6V; $V_{\overline{RESET}}$ = V_{IN}; VIO = 1.8V V_{Dx} = 0.4V; V_{DAUX} = 0.4V; R_{SET} = 16.9kΩ; D_x = D_{AUX} = Fullscale Current; EN-MAIN, EN-D5 Bits = "1"; C1=C2=1.0µF, C_{IN}=C_{OUT}=1.0µF; Specifications related to output current(s) and current setting pins (I_{Dx} and I_{SET}) apply to Main Display and Auxiliary LED. (3)

Parameter		Test Conditions		Min	Typ	Max	Units
I_{Dx}	Output Current Regulation Main Display or Auxiliary LED Enabled	3.0V ≤ V_{IN} ≤ 5.5V EN-AUX= '0'		**18.2 (-9.5%)**	20.1	**22.0 (+9.5%)**	mA (%)
		3.0V ≤ V_{IN} ≤ 5.5V EN-AUX = '1' and EN-MAIN = EN-D5 = '0'		**19.2 (-7.7%)**	20.8	**22.4 (+7.7%)**	mA (%)
	Maximum Output Current Regulation Main Display and Auxiliary LED Enabled (4)	3.2V ≤ V_{IN} ≤ 5.5V R_{SET} = 8.33kΩ V_{LED} = 3.6V EN-MAIN = EN-D5 = EN-AUX = "1"			30 Dx		mA
					30 D_{AUX}		
$I_{Dx\text{-}MATCH}$	LED Current Matching	(5)			0.3	**1.7**	%
R_{OUT}	Open-Loop Charge Pump Output Resistance	Gain = 3/2			2.75		Ω
		Gain = 1			1		
V_{DxTH}	V_{Dx} 1x to 3/2x Gain Transition Threshold	V_{Dx} Falling RSET = 16.9kΩ			175		mV
V_{HR}	Current Source Headroom Voltage Requirement (6)	I_{Dxx} = 95% ×I_{Dxx} (nom.) (I_{Dxx} (nom) ≈ 15mA) Gain = 3/2 EN-MAIN = EN-D5 and/or EN-AUX= "1"			110		mV
I_Q	Quiescent Supply Current	Gain = 1.5x, No Load			2.90	**3.32**	mA
I_{SD}	Shutdown Supply Current	All EN-x bits = "0"			3.4	**5.4**	µA
V_{SET}	I_{SET} Pin Voltage	2.7V ≤ V_{IN} ≤ 5.5V			1.25		V
I_{Dx}/ I_{SET}	Output Current to Current Set Ratio Main Display, DAUX				200		
f_{SW}	Switching Frequency			**0.89**	1.27	**1.57**	MHz
t_{START}	Start-up Time	P_{OUT} = 90% steady state			250		µs
f_{PWM}	Internal Diode Current PWM Frequency				20		kHz
$V_{\overline{RESET}}$	Reset Voltage Thresholds	2.7V ≤ V_{IN} ≤ 5.5V	Reset	**0**		**0.45**	V
			Normal Operation	**1.2**		**V_{IN}**	
I^2C Compatible Interface Voltage Specifications (SCL, SDIO, VIO)							
V_{IO}	Serial Bus Voltage Level	2.7V ≤ V_{IN} ≤ 5.5V (7)		**1.4**		**V_{IN}**	V
V_{IL}	Input Logic Low "0"	2.7V ≤ V_{IN} ≤ 5.5V, VIO = 3.0V		**0**		**0.3 × V_{IO}**	V
V_{IH}	Input Logic High "1"	2.7V ≤ V_{IN} ≤ 5.5V, VIO = 3.0V		**0.7 × V_{IO}**		**V_{IO}**	V
V_{OL}	Output Logic Low "0"	I_{LOAD} = 3mA				**400**	mV
I^2C Compatible Interface Timing Specifications (SCL, SDIO, VIO) (8)							
t_1	SCL (Clock Period)			**2.5**			µs
t_2	Data In Setup Time to SCL High			**100**			ns
t_3	Data Out stable After SCL Low			**0**			ns
t_4	SDIO Low Setup Time to SCL Low (Start)			**100**			ns
t_5	SDIO High Hold Time After SCL High (Stop)			**100**			ns

(1) All voltages are with respect to the potential at the GND pin.
(2) Min and Max limits are specified by design, test, or statistical analysis. Typical numbers are not ensured, but do represent the most likely norm.
(3) C_{IN}, C_{POUT}, C_1, and C_2 : Low-ESR Surface-Mount Ceramic Capacitors (MLCCs) used in setting electrical characteristics
(4) The maximum total output current for the LM27966 should be limited to 180mA. The total output current can be split among any of the three banks (I_{DxA} = I_{DxC} = 30mA Max.). Under maximum output current conditions, special attention must be given to input voltage and LED forward voltage to ensure proper current regulation. See the Maximum Output Current section of the datasheet for more information.
(5) For the Main Display group of outputs on a part, the following are determined: the maximum output current in the group (MAX), the minimum output current in the group (MIN), and the average output current of the group (AVG). Two matching numbers are calculated: (MAX-AVG)/AVG and (AVG-MIN)/AVG. The largest number of the two (worst case) is considered the matching figure for the bank. The typical specification provided is the most likely norm of the matching figure for all parts.
(6) For each I_{Dxx} output pin, headroom voltage is the voltage across the internal current sink connected to that pin. For Main and Aux outputs, V_{HR} = V_{OUT} -V_{LED}. If headroom voltage requirement is not met, LED current regulation will be compromised.
(7) SCL and SDIO signals are referenced to VIO and GND for minimum VIO voltage testing.
(8) SCL and SDIO should be glitch-free in order for proper brightness control to be realized.

Copyright © 2006–2013, Texas Instruments Incorporated

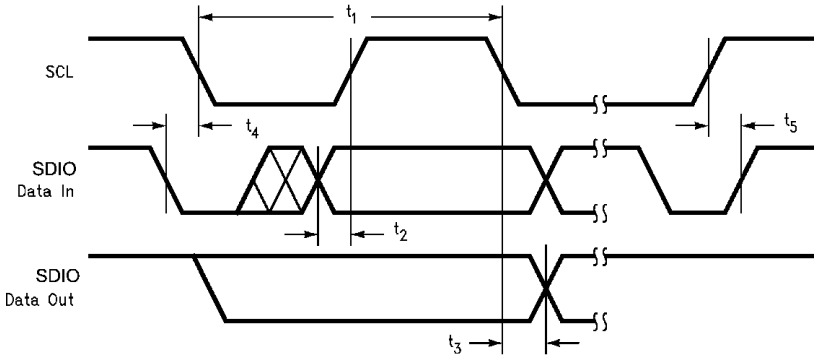

BLOCK DIAGRAM

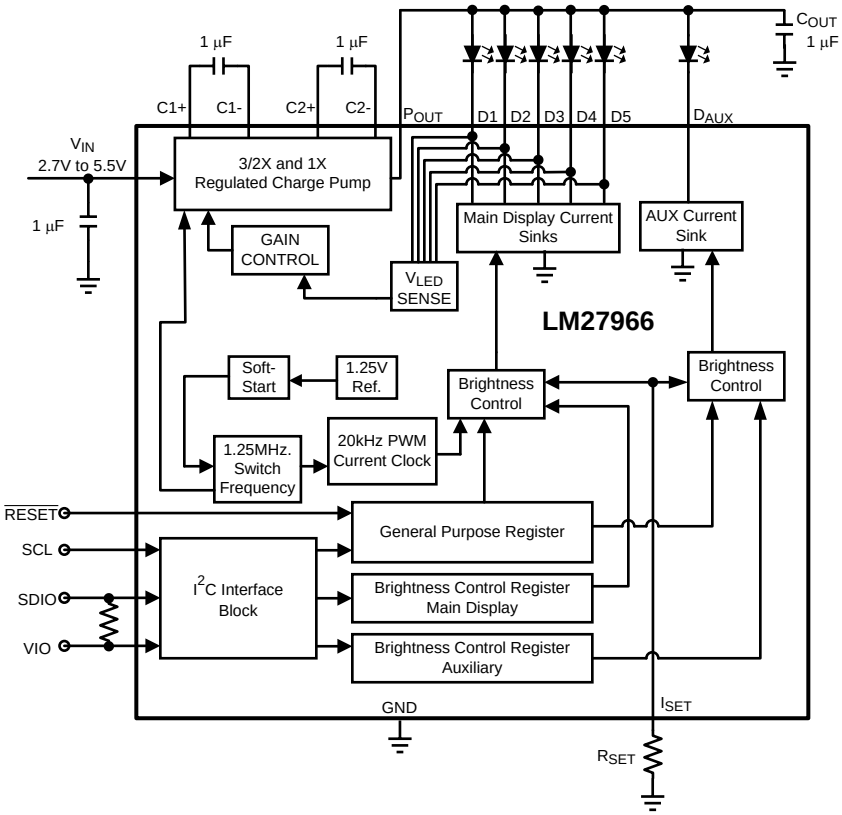

TYPICAL PERFORMANCE CHARACTERISTICS

Unless otherwise specified: T_A = 25°C; V_{IN} = 3.6V; $V_{\overline{RESET}}$ = V_{IN}; V_{LEDx} = V_{LEDAUX} = 3.6V; R_{SET} = 16.9kΩ; C_1=C_2= C_{IN} = C_{POUT} = 1µF; EN = EN5 = '1'.

LED Drive Efficiency vs Input Voltage

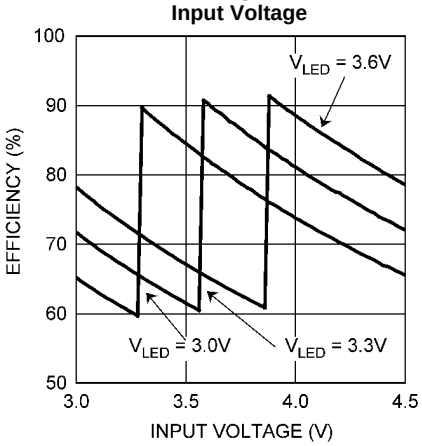

Figure 1.

Input Current vs Input Voltage

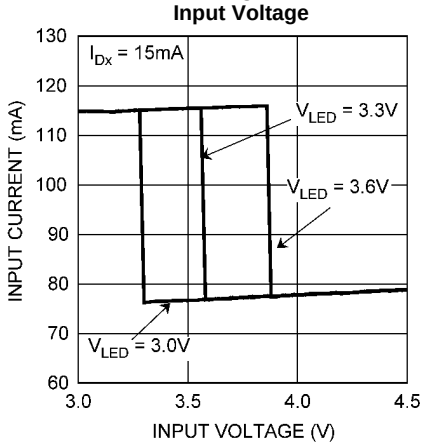

Figure 2.

Main Bank Current Regulation vs Input Voltage

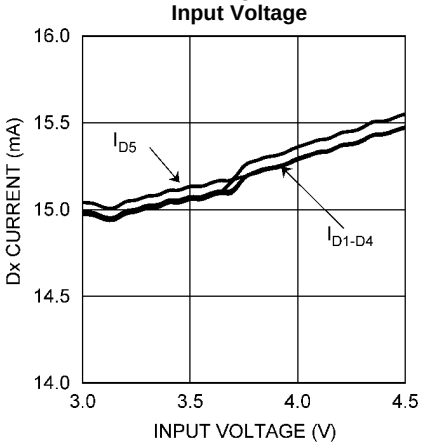

Figure 3.

D_{AUX} Current Regulation vs Input Voltage

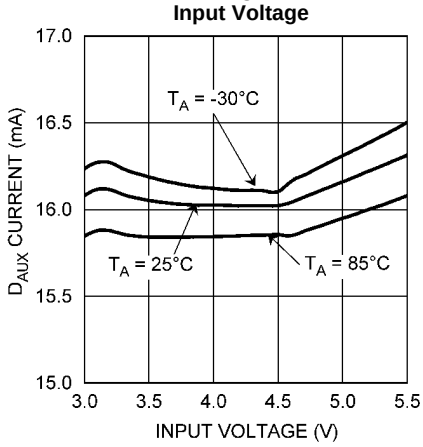

Figure 4.

Main Bank Current Matching vs Input Voltage

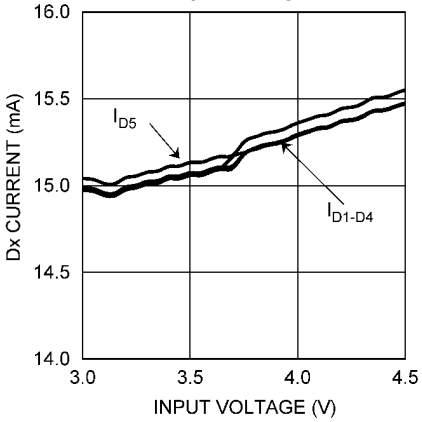

Figure 5.

Main Bank Diode Current vs Brightness Register Code

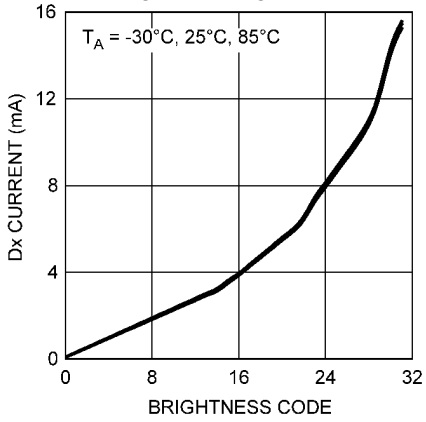

Figure 6.

Copyright © 2006–2013, Texas Instruments Incorporated

CIRCUIT DESCRIPTION

OVERVIEW

The LM27966 is a white LED driver system based upon an adaptive 1.5×/1× CMOS charge pump capable of supplying up to 180mA of total output current. With two controlled banks of constant current sinks (Main and AUX), the LM27966 is an ideal solution for platforms requiring a single white LED driver for main display and indicator lighting. The tightly matched current sinks ensure uniform brightness from the LEDs across the entire small-format display.

Each LED is configured in a common anode configuration, with the peak drive current being programmed through the use of an external R_{SET} resistor. An I^2C compatible interface is used to enable the device and vary the brightness within the individual current sink banks. For Main Display LEDs, 32 levels of brightness control are available. The brightness control is achieved through a mix of analog and pulse width modulated (PWM) methods. D_{AUX} has 4 analog brightness levels available.

CIRCUIT COMPONENTS

Charge Pump

The input to the 1.5x/1x charge pump is connected to the V_{IN} pin, and the regulated output of the charge pump is connected to the V_{OUT} pin. The recommended input voltage range of the LM27966 is 3.0V to 5.5V. The device's regulated charge pump has both open loop and closed loop modes of operation. When the device is in open loop, the voltage at V_{OUT} is equal to the gain times the voltage at the input. When the device is in closed loop, the voltage at V_{OUT} is regulated to 4.6V (typ.). The charge pump gain transitions are actively selected to maintain regulation based on LED forward voltage and load requirements. This allows the charge pump to stay in the most efficient gain (1x) over as much of the input voltage range as possible, reducing the power consumed from the battery.

LED Forward Voltage Monitoring

The LM27966 has the ability to switch converter gains (1x or 1.5x) based on the forward voltage of the LED load. This ability to switch gains maximizes efficiency for a given load. Forward voltage monitoring occurs on all diode pins within Main Display. At higher input voltages, the LM27966 will operate in pass mode, allowing the P_{OUT} voltage to track the input voltage. As the input voltage drops, the voltage on the D_X pins will also drop ($V_{DX} = V_{POUT} - V_{LEDx}$). Once any of the active D_x pins reaches a voltage approximately equal to 175mV, the charge pump will then switch to the gain of 1.5x. This switchover ensures that the current through the LEDs never becomes pinched off due to a lack of headroom on the current sources.

Diode pin D5 can have the diode sensing circuity disabled through the general purpose register if D5 is not going to be used.

D_{AUX} is not a monitored LED current sink.

$\overline{\text{RESET}}$ Pin

The LM27965 has a hardware reset pin ($\overline{\text{RESET}}$) that allows the device to be disabled by an external controller without requiring an I^2C write command. Under normal operation, the $\overline{\text{RESET}}$ pin should be held high (logic '1') to prevent an unwanted reset. When the $\overline{\text{RESET}}$ is driven low (logic '0'), all internal control registers reset to the default states and the part becomes disabled. Please see the *Electrical Characteristics* section of the datasheet for required voltage thresholds.

I^2C Compatible Interface

DATA VALIDITY

The data on SDIO line must be stable during the HIGH period of the clock signal (SCL). In other words, state of the data line can only be changed when CLK is LOW.

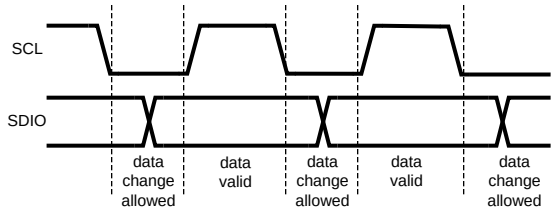

Figure 7. Data Validity Diagram

A pull-up resistor between VIO and SDIO must be greater than [**(VIO-V_{OL}) / 3mA**] to meet the V_{OL} requirement on SDIO. Using a larger pull-up resistor results in lower switching current with slower edges, while using a smaller pull-up results in higher switching currents with faster edges.

START AND STOP CONDITIONS

START and STOP conditions classify the beginning and the end of the I^2C session. A START condition is defined as SDIO signal transitioning from HIGH to LOW while SCL line is HIGH. A STOP condition is defined as the SDIO transitioning from LOW to HIGH while SCL is HIGH. The I^2C master always generates START and STOP conditions. The I^2C bus is considered to be busy after a START condition and free after a STOP condition. During data transmission, the I^2C master can generate repeated START conditions. First START and repeated START conditions are equivalent, function-wise. The data on SDIO line must be stable during the HIGH period of the clock signal (SCL). In other words, the state of the data line can only be changed when CLK is LOW.

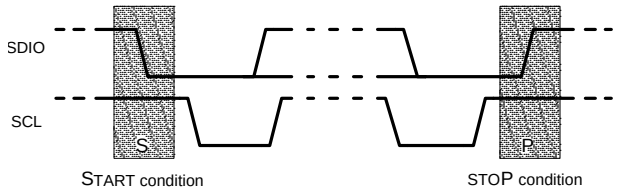

Figure 8. Start and Stop Conditions

TRANSFERING DATA

Every byte put on the SDIO line must be eight bits long, with the most significant bit (MSB) being transferred first. Each byte of data has to be followed by an acknowledge bit. The acknowledge related clock pulse is generated by the master. The master releases the SDIO line (HIGH) during the acknowledge clock pulse. The LM27966 pulls down the SDIO line during the 9th clock pulse, signifying an acknowledge. The LM27966 generates an acknowledge after each byte has been received.

After the START condition, the I^2C master sends a chip address. This address is seven bits long followed by an eighth bit which is a data direction bit (R/W). The LM27966 address is 36h. For the eighth bit, a “0” indicates a WRITE and a “1” indicates a READ. The second byte selects the register to which the data will be written. The third byte contains data to write to the selected register.

 Copyright © 2006–2013, Texas Instruments Incorporated

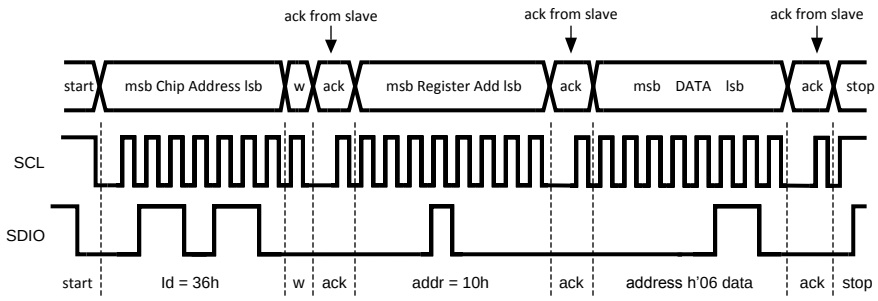

Figure 9. Write Cycle
w = write (SDIO = "0")
r = read (SDIO = "1")
ack = acknowledge (SDIO pulled down by either master or slave)
rs = repeated start
id = chip address, 36h for LM27966

I²C COMPATIBLE CHIP ADDRESS

The chip address for LM27966 is 0110110, or 36h.

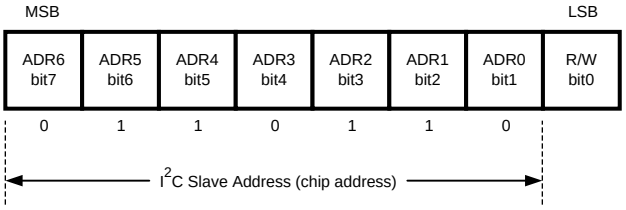

Figure 10. Chip Address

INTERNAL REGISTERS OF LM27966

Register	Internal Hex Address	Power On Value
General Purpose Register	10h	0010 0000
Main Display Brightness Control Register	A0h	1110 0000
Auxiliary LED Brightness Control Register	C0h	1111 1100

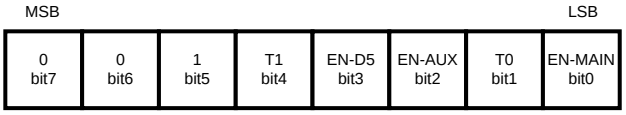

Figure 11. General Purpose Register Description
Internal Hex Address: 10h

NOTE

EN-MAIN: Enables Dx LED drivers (Main Display)

T0: Must be set to '0'

EN-AUX: Enables D_{AUX} LED driver (Indicator Lighting)

EN-D5: Enables D5 LED voltage sense

T1: Must be set to '0'

Main Display Brightness Control
Register Address: 0xA0

MSB							LSB
1 bit7	1 bit6	1 bit5	Dx4 bit4	Dx3 bit3	Dx2 bit2	Dx1 bit1	Dx0 bit0

D_{AUX} Brightness Control
Register Address: 0xC0

MSB							LSB
1 bit7	1 bit6	1 bit5	1 bit4	1 bit3	1 bit2	DAUX-1 bit1	DAUX-0 bit0

Figure 12. Brightness Control Register Description Internal Hex Address: 0xA0 (Main Display), 0xC0 (D_{AUX})

NOTE

Dx4-Dx0: Sets Brightness for Dx pins (Main Display). 11111=Fullscale

Bit7 to Bit 5: Not Used

DAUX1-DAUX0: Sets Brightness for D_{AUX} pin. 11 = Fullscale

Bit7 to Bit2:Not Used

Full-Scale Current set externally by the following equation:

$$I_{Dx} = 200 \times 1.25V / R_{SET}$$

Table 1. Brightness Level Control Table (Main Display)

Brightness Code (hex)	Analog Current (% of Full-Scale)	Duty Cycle (%)	Perceived Brightness Level (%)
00	20	1/16	1.25
01	20	2/16	2.5
02	20	3/16	3.75
03	20	4/16	5
04	20	5/16	6.25
05	20	6/16	7.5
06	20	7/16	8.75
07	20	8/16	10
08	20	9/16	11.25
09	20	10/16	12.5
0A	20	11/16	13.75
0B	20	12/16	15
0C	20	13/16	16.25
0D	20	14/16	17.5
0E	20	15/16	18.75
0F	20	16/16	20
10	40	10/16	25
11	40	11/16	27.5
12	40	12/16	30
13	40	13/16	32.5
14	40	14/16	35
15	40	15/16	37.5
16	40	16/16	40
17	70	11/16	48.125
18	70	12/16	52.5

Copyright © 2006–2013, Texas Instruments Incorporated

Table 1. Brightness Level Control Table (Main Display) (continued)

Brightness Code (hex)	Analog Current (% of Full-Scale)	Duty Cycle (%)	Perceived Brightness Level (%)
19	70	13/16	56.875
1A	70	14/16	61.25
1B	70	15/16	65.625
1C	70	16/16	70
1D	100	13/16	81.25
1E	100	15/16	93.75
1F	100	16/16	100

D_{AUX} Brightness Levels (%of Full-Scale) = 20%, 40%, 70%, 100%

APPLICATION INFORMATION

SETTING LED CURRENT

The current through the LEDs connected to Dx can be set to a desired level simply by connecting an appropriately sized resistor (R_{SET}) between the I_{SET} pin of the LM27966 and GND. The Dx currents are proportional to the current that flows out of the I_{SET} pin and are a factor of 200 times greater than the I_{SET} current. The feedback loops of the internal amplifiers set the voltage of the I_{SET} pin to 1.25V (typ.). The statements above are simplified in the equations below:

$$I_{Dx} = 200 \times (V_{ISET} / R_{SET}) \quad (1)$$

$$R_{SET} = 200 \times (1.25V / I_{Dx})$$

Once the desired R_{SET} value has been chosen, the LM27966 has the ability to internally dim the LEDs using a mix of Pulse Width Modulation (PWM) and analog current scaling. The PWM duty cycle is set through the I^2C compatible interface. LEDs connected to Main Display current sinks (Dx) can be dimmed to 32 different levels/duty-cycles. The internal PWM frequency for Main Display is a fixed 20kHz. D_{AUX} has 4 analog current levels.

Please refer to the I^2C Compatible Interface section of this datasheet for detailed instructions on how to adjust the brightness control registers.

MAXIMUM OUTPUT CURRENT, MAXIMUM LED VOLTAGE, MINIMUM INPUT VOLTAGE

The LM27966 can drive 6 LEDs at 30mA each (Main Display and D_{AUX}) from an input voltage as low as 3.2V, so long as the LEDs have a forward voltage of 3.6V or less (room temperature).

The statement above is a simple example of the LED drive capabilities of the LM27966. The statement contains the key application parameters that are required to validate an LED-drive design using the LM27966: LED current (I_{LEDx}), number of active LEDs (N_x), LED forward voltage (V_{LED}), and minimum input voltage (V_{IN-MIN}).

The equation below can be used to estimate the maximum output current capability of the LM27966:

$$I_{LED_MAX} = [(1.5 \times V_{IN}) - V_{LED} - (I_{DAUX} \times R_{OUT})] / [(N_{MAIN} \times R_{OUT}) + k_{HR}] \text{ (eq. 1)} \quad (2)$$

$$I_{LED_MAX} = [(1.5 \times V_{IN}) - V_{LED} - (I_{DAUX} \times 2.75\Omega)] / [(N_{MAIN} \times 2.75\Omega) + k_{HR}] \quad (3)$$

I_{DAUX} is the additional current that could be delivered to the AUX LED.

R_{OUT} – Output resistance. This parameter models the internal losses of the charge pump that result in voltage droop at the pump output P_{OUT}. Since the magnitude of the voltage droop is proportional to the total output current of the charge pump, the loss parameter is modeled as a resistance. The output resistance of the LM27966 is typically 2.75Ω (V_{IN} = 3.6V, T_A = 25°C). In equation form:

$$V_{POUT} = (1.5 \times V_{IN}) – [N_{MAIN} \times I_{LED-MAIN} \times R_{OUT}] \quad \text{(eq. 2)} \quad (4)$$

k_{HR} – Headroom constant. This parameter models the minimum voltage required to be present across the current sources for them to regulate properly. This minimum voltage is proportional to the programmed LED current, so the constant has units of mV/mA. The typical k_{HR} of the LM27966 is 8mV/mA. In equation form:

$$(V_{POUT} – V_{LEDx}) > k_{HR} \times I_{LEDx} \quad \text{(eq. 3)} \quad (5)$$

Typical Headroom Constant Value k_{HR} = 8mV/mA (6)

The "$I_{LED-MAX}$" equation (eq. 1) is obtained from combining the R_{OUT} equation (eq. 2) with the k_{HR} equation (eq. 3) and solving for I_{LEDx}. Maximum LED current is highly dependent on minimum input voltage and LED forward voltage. Output current capability can be increased by raising the minimum input voltage of the application, or by selecting an LED with a lower forward voltage. Excessive power dissipation may also limit output current capability of an application.

Total Output Current Capability

The maximum output current that can be drawn from the LM27966 is 180mA. Each driver bank has a maximum allotted current per Dx sink that must not be exceeded.

MAXIMUM Dx CURRENT
30mA

Copyright © 2006–2013, Texas Instruments Incorporated

The 180mA load can be distributed in many different configurations. Special care must be taken when running the LM27966 at the maximum output current to ensure proper functionality.

PARALLEL CONNECTED AND UNUSED OUTPUTS

Outputs D1-5 may be connected together to drive one or two LEDs at higher currents. In such a configuration, all five parallel current sinks (Main Display) of equal value can drive a single LED. The LED current programmed for Main Display should be chosen so that the current through each of the outputs is programmed to 20% of the total desired LED current. For example, if 60mA is the desired drive current for a single LED, R_{SET} should be selected such that the current through each of the current sink inputs is 12mA.

Connecting the outputs in parallel does not affect internal operation of the LM27966 and has no impact on the Electrical Characteristics and limits previously presented. The available diode output current, maximum diode voltage, and all other specifications provided in the Electrical Characteristics table apply to this parallel output configuration, just as they do to the standard 5-LED application circuit.

Main Display utilizes LED forward voltage sensing circuitry on each Dxx pin to optimize the charge-pump gain for maximum efficiency. Due to the nature of the sensing circuitry, it is not recommended to leave any of the Dx (D1-D4) pins unused if either diode bank is going to be used during normal operation. Leaving Dx pins unconnected will force the charge-pump into 1.5× mode over the entire V_{IN} range negating any efficiency gain that could be achieve by switching to 1× mode at higher input voltages.

If D5 is not used, it is recommended that the driver pin be grounded and the general purpose register bit EN-D5 be set to 0 to ensure proper gain transitions.

Care must be taken when selecting the proper R_{SET} value. The current on any Dx pin must not exceed the maximum current rating for any given current sink pin.

POWER EFFICIENCY

The efficiency of LED drivers is commonly taken to be the ratio of power consumed by the LEDs (P_{LED}) to the power drawn at the input of the part (P_{IN}). With a 1.5x/1x charge pump, the input current is equal to the charge pump gain times the output current (total LED current). The efficiency of the LM27966 can be predicted as follows:

$$P_{LEDTOTAL} = (V_{LED\text{-}MAIN} \times N_{MAIN} \times I_{LED\text{-}MAIN}) + (V_{LED\text{-}AUX} \times I_{LED\text{-}AUX}) \quad (7)$$

$$P_{IN} = V_{IN} \times I_{IN} \quad (8)$$

$$P_{IN} = V_{IN} \times (GAIN \times I_{LEDTOTAL} + I_Q) \quad (9)$$

$$E = (P_{LEDTOTAL} \div P_{IN}) \quad (10)$$

It is also worth noting that efficiency as defined here is in part dependent on LED voltage. Variation in LED voltage does not affect power consumed by the circuit and typically does not relate to the brightness of the LED. For an advanced analysis, it is recommended that power consumed by the circuit (V_{IN} x I_{IN}) be evaluated rather than power efficiency.

POWER DISSIPATION

The power dissipation (P_{DISS}) and junction temperature (T_J) can be approximated with the equations below. P_{IN} is the power generated by the 1.5x/1x charge pump, P_{LED} is the power consumed by the LEDs, T_A is the ambient temperature, and θ_{JA} is the junction-to-ambient thermal resistance for the WQFN-24 package. V_{IN} is the input voltage to the LM27966, V_{LED} is the nominal LED forward voltage, N is the number of LEDs and I_{LED} is the programmed LED current.

$$P_{DISS} = P_{IN} - P_{LEDA} \quad (11)$$

$$P_{DISS} = (GAIN \times V_{IN} \times I_{LEDA}) - (V_{LEDA} \times N_A \times I_{LEDA}) - (V_{LED} \times I_{DAUX}) \quad (12)$$

$$T_J = T_A + (P_{DISS} \times \theta_{JA}) \quad (13)$$

The junction temperature rating takes precedence over the ambient temperature rating. The LM27966 may be operated outside the ambient temperature rating, so long as the junction temperature of the device does not exceed the maximum operating rating of 100°C. The maximum ambient temperature rating must be derated in applications where high power dissipation and/or poor thermal resistance causes the junction temperature to exceed 100°C.

Copyright © 2006–2013, Texas Instruments Incorporated

THERMAL PROTECTION

Internal thermal protection circuitry disables the LM27966 when the junction temperature exceeds 170°C (typ.). This feature protects the device from being damaged by high die temperatures that might otherwise result from excessive power dissipation. The device will recover and operate normally when the junction temperature falls below 165°C (typ.). It is important that the board layout provide good thermal conduction to keep the junction temperature within the specified operating ratings.

CAPACITOR SELECTION

The LM27966 requires 4 external capacitors for proper operation (C_1 = C_2 = 1µF, C_{IN} = C_{OUT} = 1µF). Surface-mount multi-layer ceramic capacitors are recommended. These capacitors are small, inexpensive and have very low equivalent series resistance (ESR <20mΩ typ.). Tantalum capacitors, OS-CON capacitors, and aluminum electrolytic capacitors are not recommended for use with the LM27966 due to their high ESR, as compared to ceramic capacitors.

For most applications, ceramic capacitors with X7R or X5R temperature characteristic are preferred for use with the LM27966. These capacitors have tight capacitance tolerance (as good as ±10%) and hold their value over temperature (X7R: ±15% over -55°C to 125°C; X5R: ±15% over -55°C to 85°C).

Capacitors with Y5V or Z5U temperature characteristic are generally not recommended for use with the LM27966. Capacitors with these temperature characteristics typically have wide capacitance tolerance (+80%, -20%) and vary significantly over temperature (Y5V: +22%, -82% over -30°C to +85°C range; Z5U: +22%, -56% over +10°C to +85°C range). Under some conditions, a nominal 1µF Y5V or Z5U capacitor could have a capacitance of only 0.1µF. Such detrimental deviation is likely to cause Y5V and Z5U capacitors to fail to meet the minimum capacitance requirements of the LM27966.

The minimum voltage rating acceptable for all capacitors is 6.3V. The recommended voltage rating for the input and output capacitors is 10V to account for DC bias capacitance losses.

PCB LAYOUT CONSIDERATIONS

The WQFN is a leadframe based Chip Scale Package (CSP) with very good thermal properties. This package has an exposed DAP (die attach pad) at the center of the package measuring 2.6mm x 2.5mm. The main advantage of this exposed DAP is to offer lower thermal resistance when it is soldered to the thermal land on the PCB. For PCB layout, National highly recommends a 1:1 ratio between the package and the PCB thermal land. To further enhance thermal conductivity, the PCB thermal land may include vias to a ground plane. For more detailed instructions on mounting WQFN packages, please refer to Application Note AN-1187.

Copyright © 2006–2013, Texas Instruments Incorporated

REVISION HISTORY

Changes from Revision A (May 2013) to Revision B	Page
• Changed layout of National Data Sheet to TI format	14

PACKAGING INFORMATION

Orderable Device	Status (1)	Package Type	Package Drawing	Pins	Package Qty	Eco Plan (2)	Lead finish/ Ball material (6)	MSL Peak Temp (3)	Op Temp (°C)	Device Marking (4/5)	Samples
LM27966SQ/NOPB	ACTIVE	WQFN	RTW	24	1000	RoHS & Green	SN	Level-1-260C-UNLIM	-30 to 85	L27966S	Samples

(1) The marketing status values are defined as follows:
ACTIVE: Product device recommended for new designs.
LIFEBUY: TI has announced that the device will be discontinued, and a lifetime-buy period is in effect.
NRND: Not recommended for new designs. Device is in production to support existing customers, but TI does not recommend using this part in a new design.
PREVIEW: Device has been announced but is not in production. Samples may or may not be available.
OBSOLETE: TI has discontinued the production of the device.

(2) **RoHS:** TI defines "RoHS" to mean semiconductor products that are compliant with the current EU RoHS requirements for all 10 RoHS substances, including the requirement that RoHS substance do not exceed 0.1% by weight in homogeneous materials. Where designed to be soldered at high temperatures, "RoHS" products are suitable for use in specified lead-free processes. TI may reference these types of products as "Pb-Free".
RoHS Exempt: TI defines "RoHS Exempt" to mean products that contain lead but are compliant with EU RoHS pursuant to a specific EU RoHS exemption.
Green: TI defines "Green" to mean the content of Chlorine (Cl) and Bromine (Br) based flame retardants meet JS709B low halogen requirements of <=1000ppm threshold. Antimony trioxide based flame retardants must also meet the <=1000ppm threshold requirement.

(3) MSL, Peak Temp. - The Moisture Sensitivity Level rating according to the JEDEC industry standard classifications, and peak solder temperature.

(4) There may be additional marking, which relates to the logo, the lot trace code information, or the environmental category on the device.

(5) Multiple Device Markings will be inside parentheses. Only one Device Marking contained in parentheses and separated by a "~" will appear on a device. If a line is indented then it is a continuation of the previous line and the two combined represent the entire Device Marking for that device.

(6) Lead finish/Ball material - Orderable Devices may have multiple material finish options. Finish options are separated by a vertical ruled line. Lead finish/Ball material values may wrap to two lines if the finish value exceeds the maximum column width.

Important Information and Disclaimer: The information provided on this page represents TI's knowledge and belief as of the date that it is provided. TI bases its knowledge and belief on information provided by third parties, and makes no representation or warranty as to the accuracy of such information. Efforts are underway to better integrate information from third parties. TI has taken and continues to take reasonable steps to provide representative and accurate information but may not have conducted destructive testing or chemical analysis on incoming materials and chemicals. TI and TI suppliers consider certain information to be proprietary, and thus CAS numbers and other limited information may not be available for release.

In no event shall TI's liability arising out of such information exceed the total purchase price of the TI part(s) at issue in this document sold by TI to Customer on an annual basis.

TAPE AND REEL INFORMATION

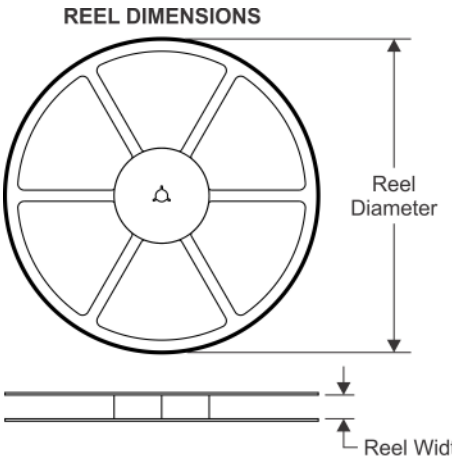

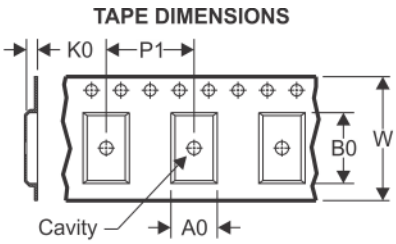

A0	Dimension designed to accommodate the component width
B0	Dimension designed to accommodate the component length
K0	Dimension designed to accommodate the component thickness
W	Overall width of the carrier tape
P1	Pitch between successive cavity centers

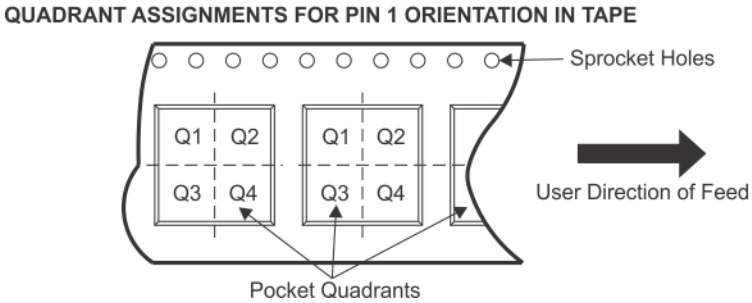

*All dimensions are nominal

Device	Package Type	Package Drawing	Pins	SPQ	Reel Diameter (mm)	Reel Width W1 (mm)	A0 (mm)	B0 (mm)	K0 (mm)	P1 (mm)	W (mm)	Pin1 Quadrant
LM27966SQ/NOPB	WQFN	RTW	24	1000	178.0	12.4	4.3	4.3	1.3	8.0	12.0	Q1

TAPE AND REEL BOX DIMENSIONS

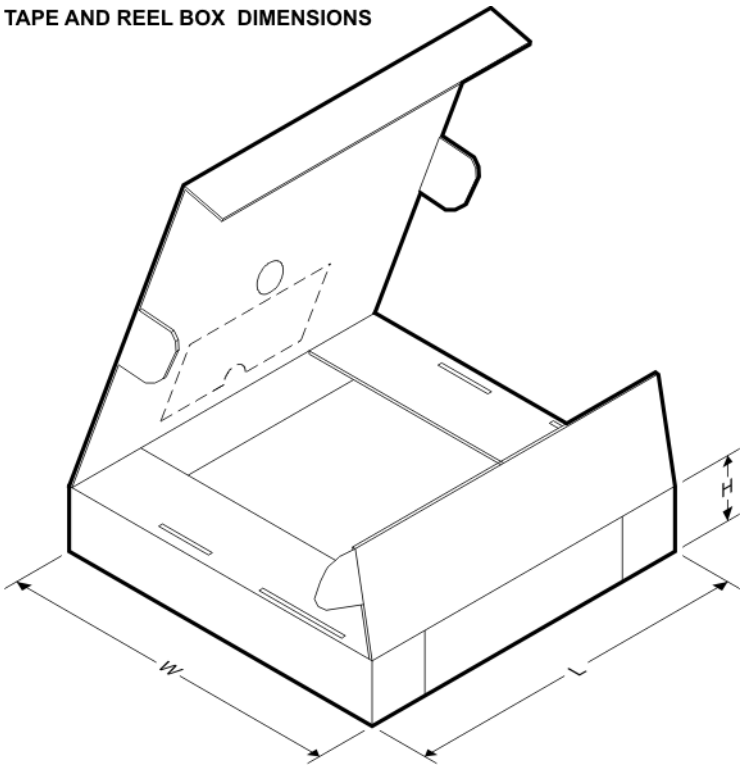

*All dimensions are nominal

Device	Package Type	Package Drawing	Pins	SPQ	Length (mm)	Width (mm)	Height (mm)
LM27966SQ/NOPB	WQFN	RTW	24	1000	210.0	185.0	35.0

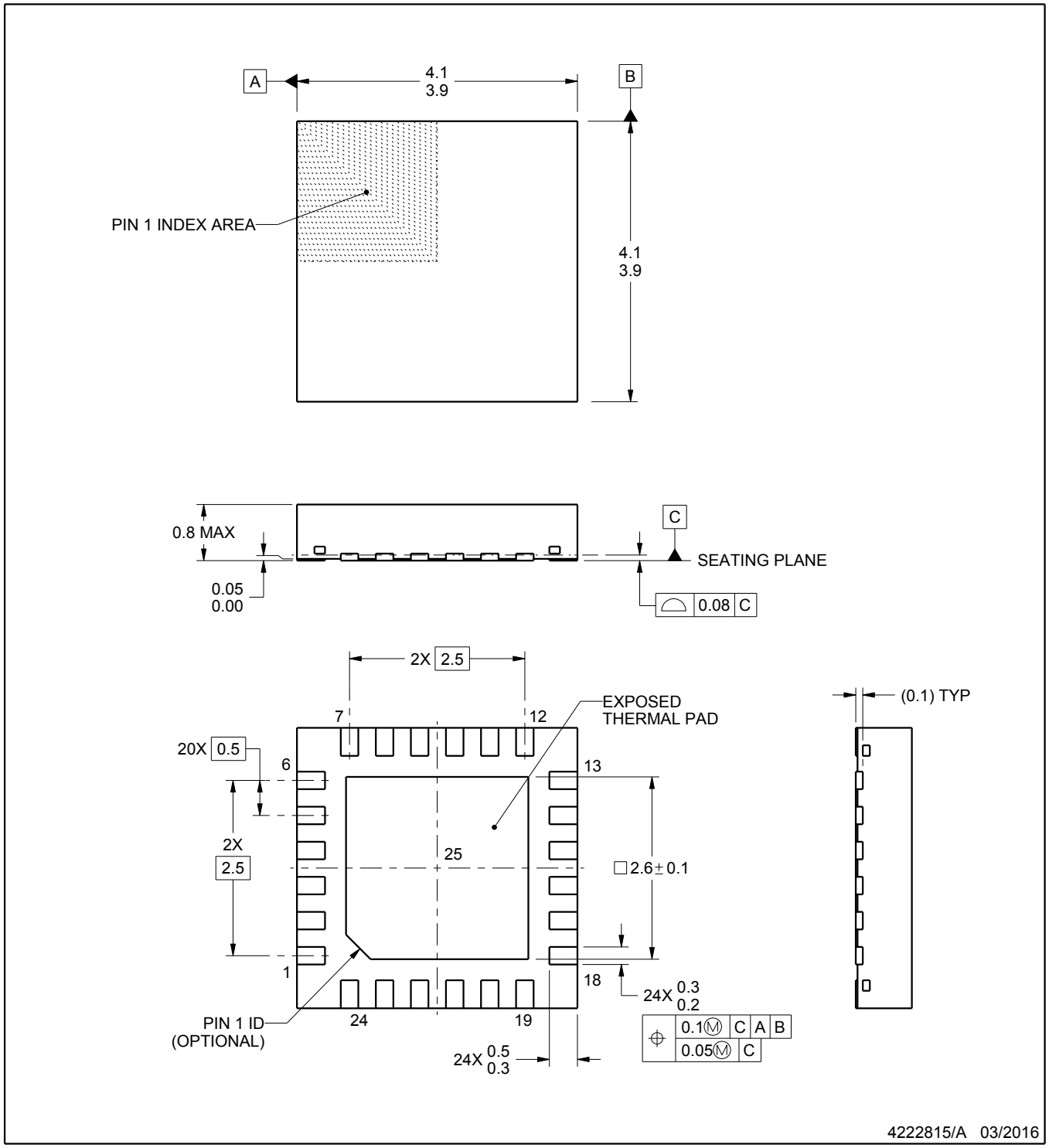

NOTES:

1. All linear dimensions are in millimeters. Any dimensions in parenthesis are for reference only. Dimensioning and tolerancing per ASME Y14.5M.
2. This drawing is subject to change without notice.
3. The package thermal pad must be soldered to the printed circuit board for thermal and mechanical performance.

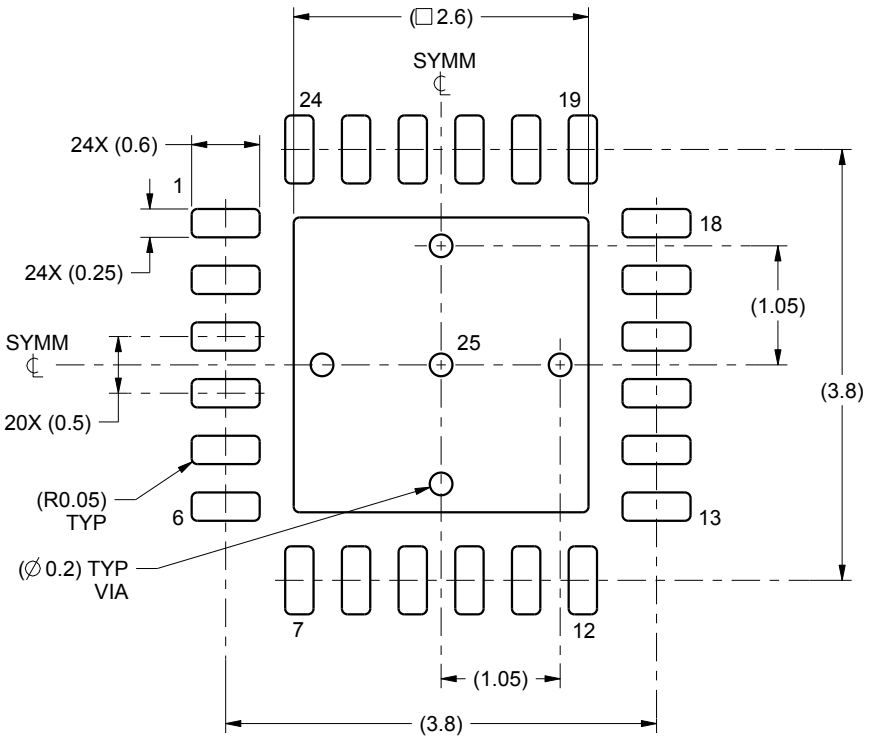

LAND PATTERN EXAMPLE
SCALE:15X

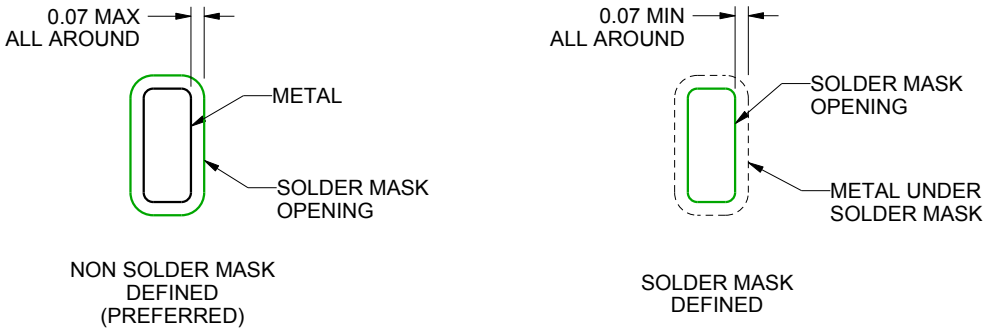

SOLDER MASK DETAILS

4222815/A 03/2016

NOTES: (continued)

4. This package is designed to be soldered to a thermal pad on the board. For more information, see Texas Instruments literature number SLUA271 (www.ti.com/lit/slua271).

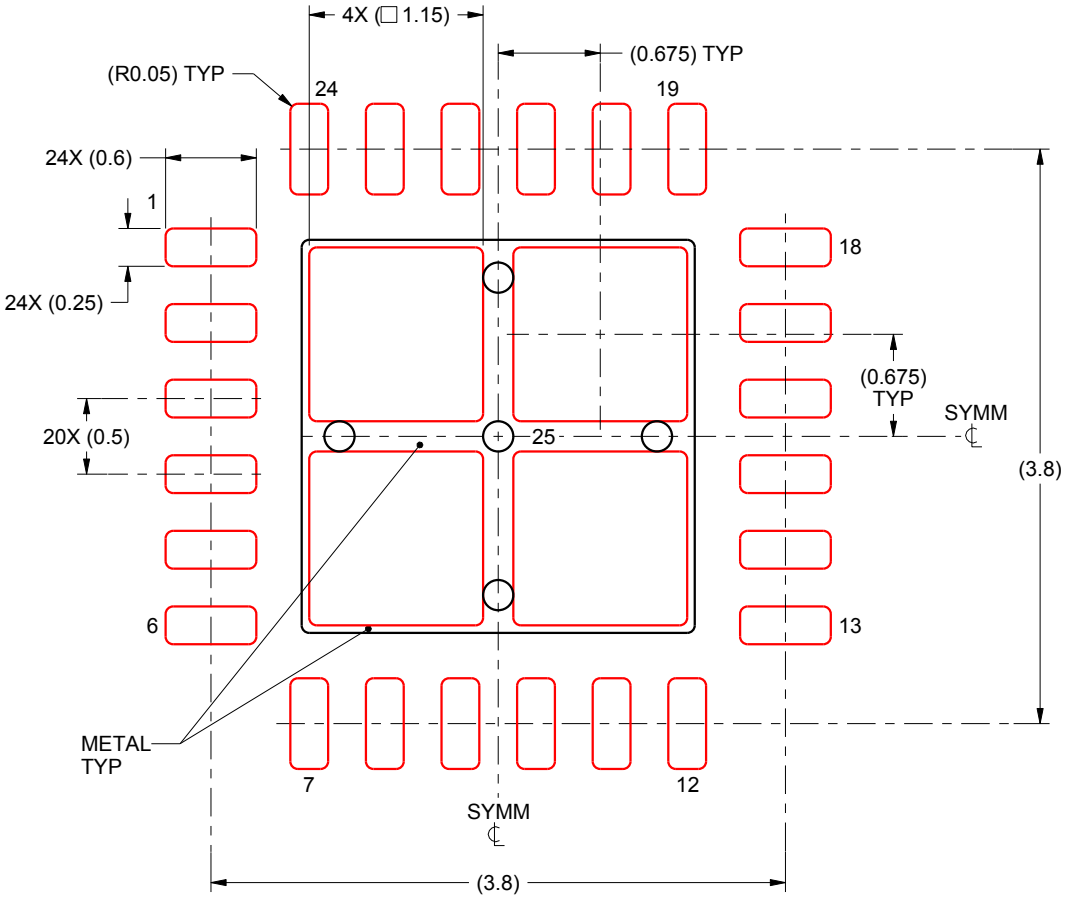

SOLDER PASTE EXAMPLE
BASED ON 0.125 mm THICK STENCIL

EXPOSED PAD 25:
78% PRINTED SOLDER COVERAGE BY AREA UNDER PACKAGE
SCALE:20X

4222815/A 03/2016

NOTES: (continued)

5. Laser cutting apertures with trapezoidal walls and rounded corners may offer better paste release. IPC-7525 may have alternate design recommendations.

IMPORTANT NOTICE AND DISCLAIMER

TI PROVIDES TECHNICAL AND RELIABILITY DATA (INCLUDING DATA SHEETS), DESIGN RESOURCES (INCLUDING REFERENCE DESIGNS), APPLICATION OR OTHER DESIGN ADVICE, WEB TOOLS, SAFETY INFORMATION, AND OTHER RESOURCES “AS IS” AND WITH ALL FAULTS, AND DISCLAIMS ALL WARRANTIES, EXPRESS AND IMPLIED, INCLUDING WITHOUT LIMITATION ANY IMPLIED WARRANTIES OF MERCHANTABILITY, FITNESS FOR A PARTICULAR PURPOSE OR NON-INFRINGEMENT OF THIRD PARTY INTELLECTUAL PROPERTY RIGHTS.

These resources are intended for skilled developers designing with TI products. You are solely responsible for (1) selecting the appropriate TI products for your application, (2) designing, validating and testing your application, and (3) ensuring your application meets applicable standards, and any other safety, security, regulatory or other requirements.

These resources are subject to change without notice. TI grants you permission to use these resources only for development of an application that uses the TI products described in the resource. Other reproduction and display of these resources is prohibited. No license is granted to any other TI intellectual property right or to any third party intellectual property right. TI disclaims responsibility for, and you will fully indemnify TI and its representatives against, any claims, damages, costs, losses, and liabilities arising out of your use of these resources.

TI’s products are provided subject to TI’s Terms of Sale or other applicable terms available either on ti.com or provided in conjunction with such TI products. TI’s provision of these resources does not expand or otherwise alter TI’s applicable warranties or warranty disclaimers for TI products.

TI objects to and rejects any additional or different terms you may have proposed.

Mailing Address: Texas Instruments, Post Office Box 655303, Dallas, Texas 75265
Copyright © 2022, Texas Instruments Incorporated