Tous droits strictement reserves. Reproduction ou communication a des tiers interdite sous quelque forme que ce soit sans autorisation ecrite du propietaire. Propriete de c FCI. Droits de reproduction FCI.

All rights strictly reserved. Reproduction or issue to third parties in any form whatever is not permitted without written authority from the proprietor. Property of FCI. Copyright FCI.

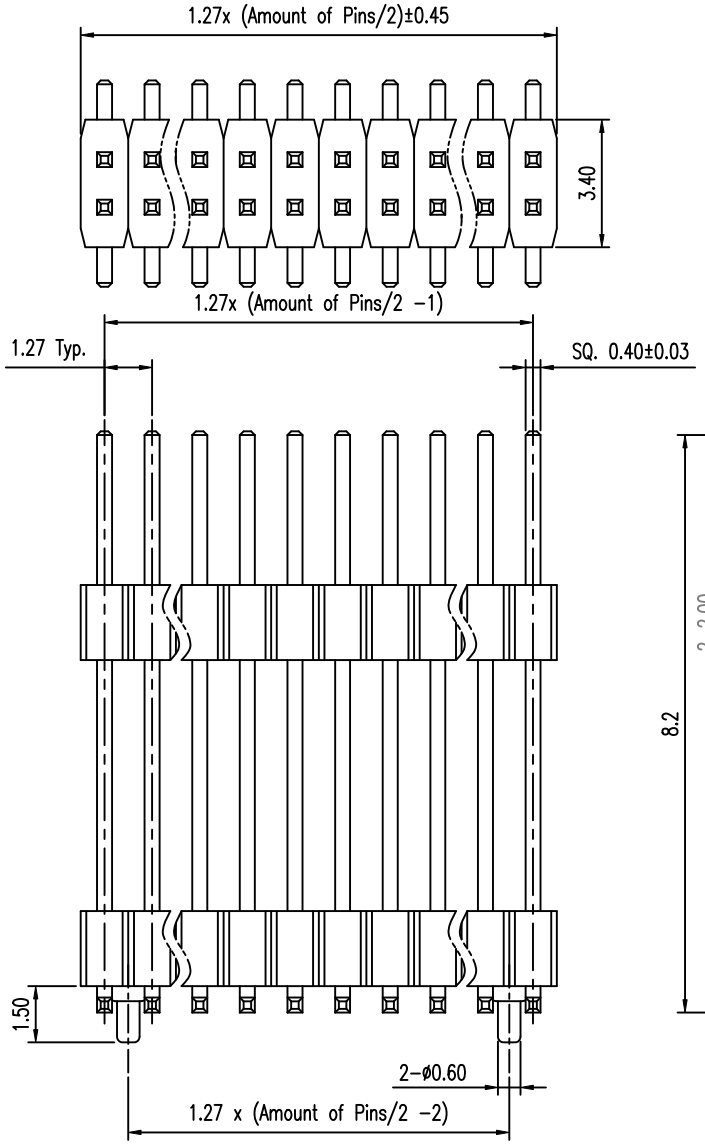

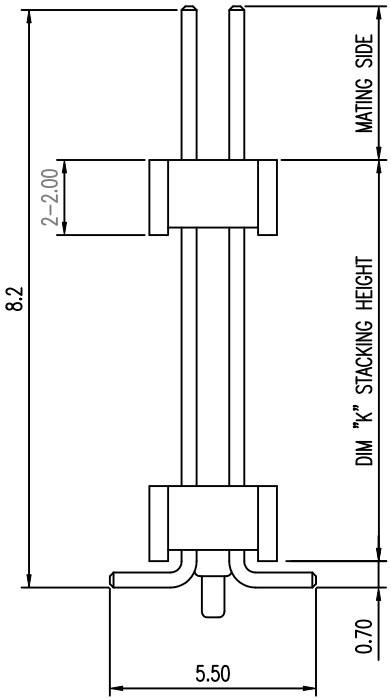

NOTE:
1. MATERIAL,
   HOUSING: NYLON 6T (E630NK), UL94V−0
   TERMINAL: C2700 H
2. FINISH:
   TERMINAL: GOLD AT CONTACT,
   G/F OVER 1um(40u") MIN Ni OVER ALL
3. SPEC.:
PRODUCT SPEC: GS−12−629
PACKING SPEC: GS−14−1517
4. THE HSG. WILL WITHSTAND EXPOSURE TO 260C PEAK TEMP. FOR 10 SEC. IN A CONVECTION, INFRA−RED OR VAPOR PHASE REFLOW OVEN.
5. MATING SIDE LENGTH: 2.50MM MIN.
6. PRODUCT NUMBERING:

200218 3 1 − XXX XX X X LF

- LF: LEAD FREE
- X: PLATING:
  1: G/F ALL OVER
  4: 0.25um(10U")GOLD AT CONTACT
  8: 0.76um(30U") GOLD AT CONTACT
- X: PACKING
  T: TUBE
- XX: PIN COUNT
  04, 06, 08,..., 48, 50
  (EVERY EVEN PIN)
- XXX: STACK HEIGTH "K"
  EXAMPLE: 045=4.5MM
  IN 0.5MM INCREMENT

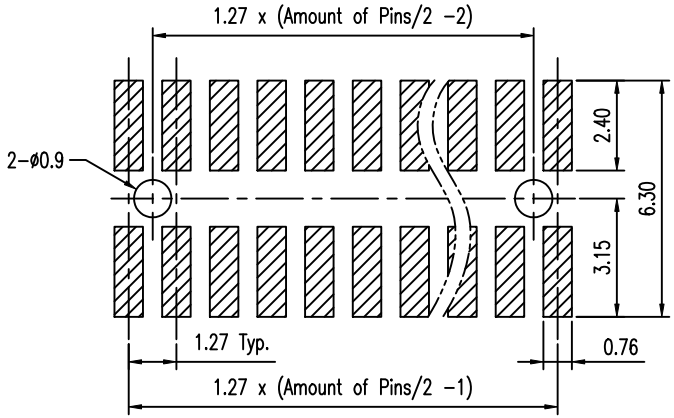

Recommended P.C.B. Layout
Layout Tolerance = ± 0.05 mm

mat'l. code				tolerances unless otherwise specified			CUSTOMER COPY	FCI www.fciconnect.com
ltr	ecn no	dr	date	linear	.X ± 0.38		projection	title 1.27X1.27MM BTB STACK HD VT, SMT
A	T10−0088	S.LIN	10'−7−15		.XX ± 0.25			
					.XXX ± 0.15			
				angles	0° ±2°			
				dr	STERLING LIN	10'−7−15	MM	product family 585 / code TWN
				engr	STERLING LIN	10'−7−15		size A4 / dwg no 20021831
				chr	STERLING LIN	10'−7−15	scale NA	sheet 1 of 1
				appd	STERLING LIN	10'−7−15		
sheet index	revision sheet	A 1						cage code

ACAD PDM: Rev:A STATUS Released Printed: Jul 16, 2010