BUD	PART NAME	NEMA DIE CAST ALUM. ENCLOSURE	PART No.	AN-1313-A & AN-1313-AB	REVISION DATE	9-30-15

UL LISTED FOR U.S. AND CANADA - FILE #E194432

TYPE RATING 4, 4X, 6, 6P, 12 AND 13, COMPARE TO IP-68

80°C. MAXIMUM OPERATING TEMPERATURE

UPDATE REPLACES PART NO. AN-1313 (NATURAL) & AN-1313-G (DISCONTINUED GRAY)

DRAWING FOR REFERENCE

WE RESERVE THE RIGHT TO MAKE CHANGES TO OUR STANDARD PRODUCTS. PLEASE CONSULT WITH BUD INDUSTRIES PRIOR TO USING THIS DRAWING FOR DESIGN PURPOSE.

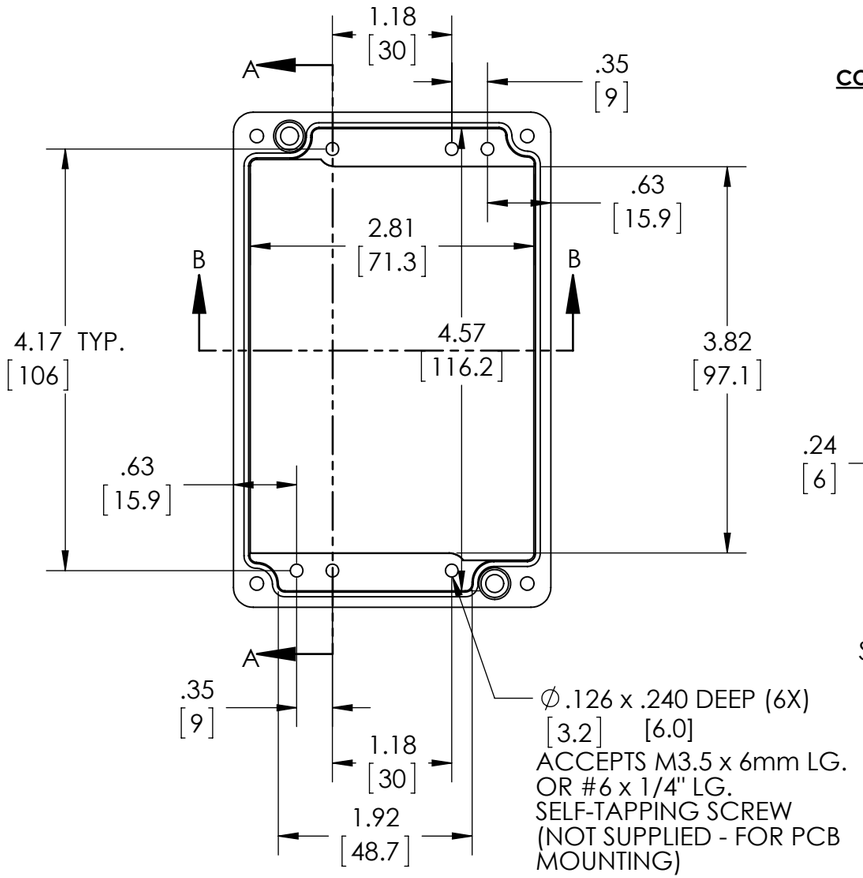

BODY
COVER NOT SHOWN

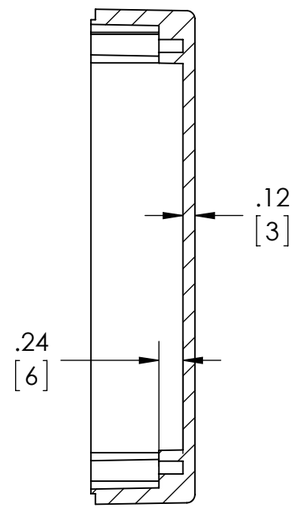

SECTION A-A

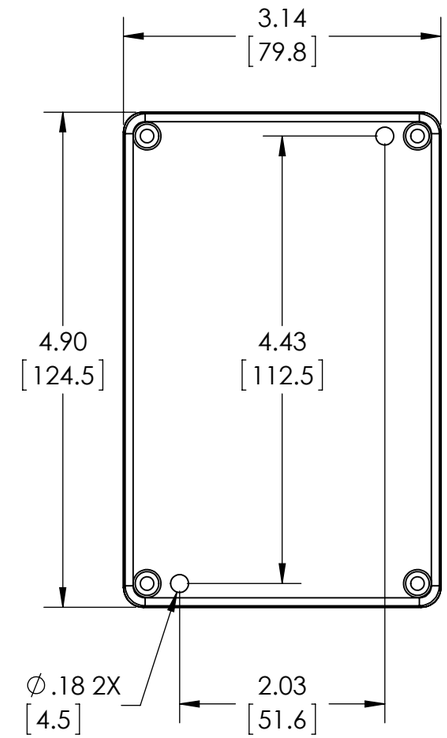

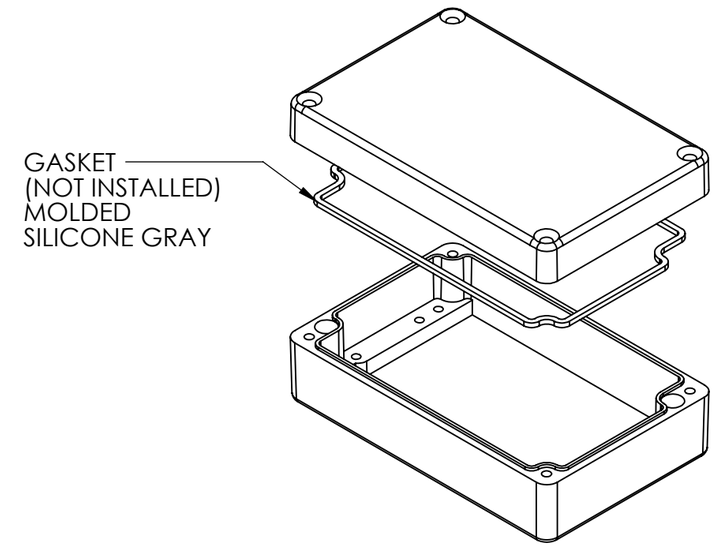

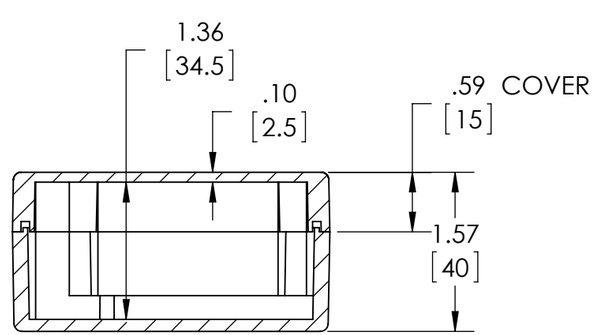

SECTION B-B

MATERIAL: BODY & COVER - ALUMINUM ALLOY #ADC-12

FINISH: NATURAL (SUFFIX -A)
SMOOTH BLACK POWDERCOAT (SUFFIX -AB)

FOUR (4) M4x0.7 x 25mm (98") LG. 90°CSK. HEAD STAINLESS STEEL SCREWS SUPPLIED FOR ASSEMBLY OF COVER TO BODY. APPLY AT 12 IN./LB. OF TORQUE.

OUTSIDE AND INSIDE DRAFT ANGLE: 1°
DIMENSIONS ARE INCH[MM]

OPTIONAL ACCESSORIES:
PCB MOUNTING KIT #57-58
INTERNAL PANEL #ANX-91313
WALL MOUNTING BRACKETS #ANX-1390
REPLACEMENT GASKET #1313GSKTSC

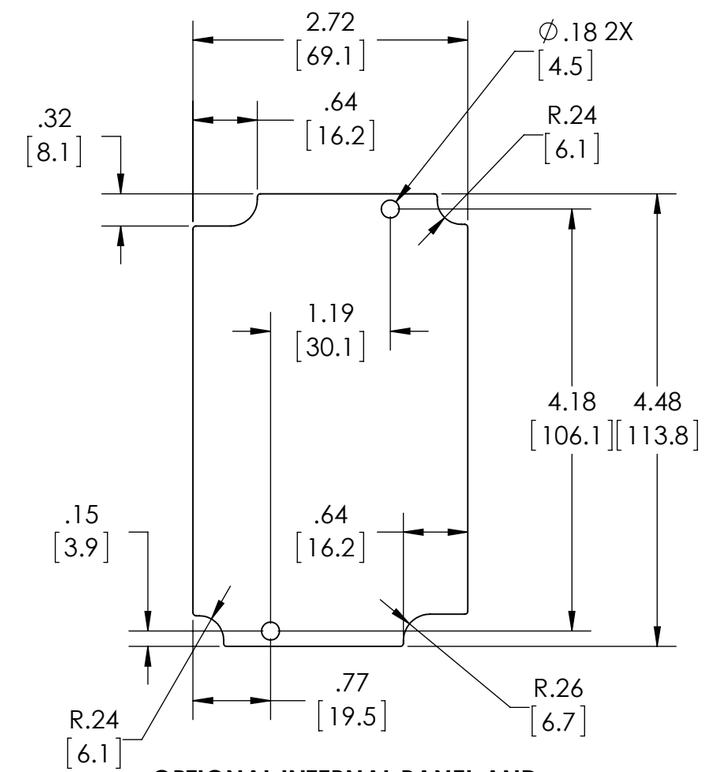

OPTIONAL INTERNAL PANEL AND SUGGESTED PC BOARD LAYOUT