THIS COPY IS PROVIDED ON A RESTRICTED BASIS AND IS NOT TO BE USED IN ANY WAY DETRIMENTAL TO THE INTERESTS OF PANDUIT CORP.

PART NUMBER		STUD SIZE	DIMENSIONS in.				
PREFIX	PK		A ±.03	W ±.01	C ±.02	M ±.03	H ±.01
PV18-6LF	-C -M -MY	#6	.90 (22,9)	.27 (6,9)	.22 (5,6)	.68 (17,3)	.14 (3,6)
PV18-6LFW	-C -M -MY	#6	.90 (22,9)	.29 (7,4)	.22 (5,6)	.68 (17,3)	.14 (3,6)
PV18-8LF	-C -M -MY	#8	.97 (24,6)	.29 (7,4)	.25 (6,4)	.73 (18,5)	.16 (4,1)
PV18-10LF	-C -M -MY	#10	.97 (24,6)	.33 (8,4)	.25 (6,4)	.73 (18,5)	.19 (4,8)
PV18-10LFN*	-C -M	#10	.97 (24,6)	.29 (7,4)	.25 (6,4)	.73 (18,5)	.19 (4,8)

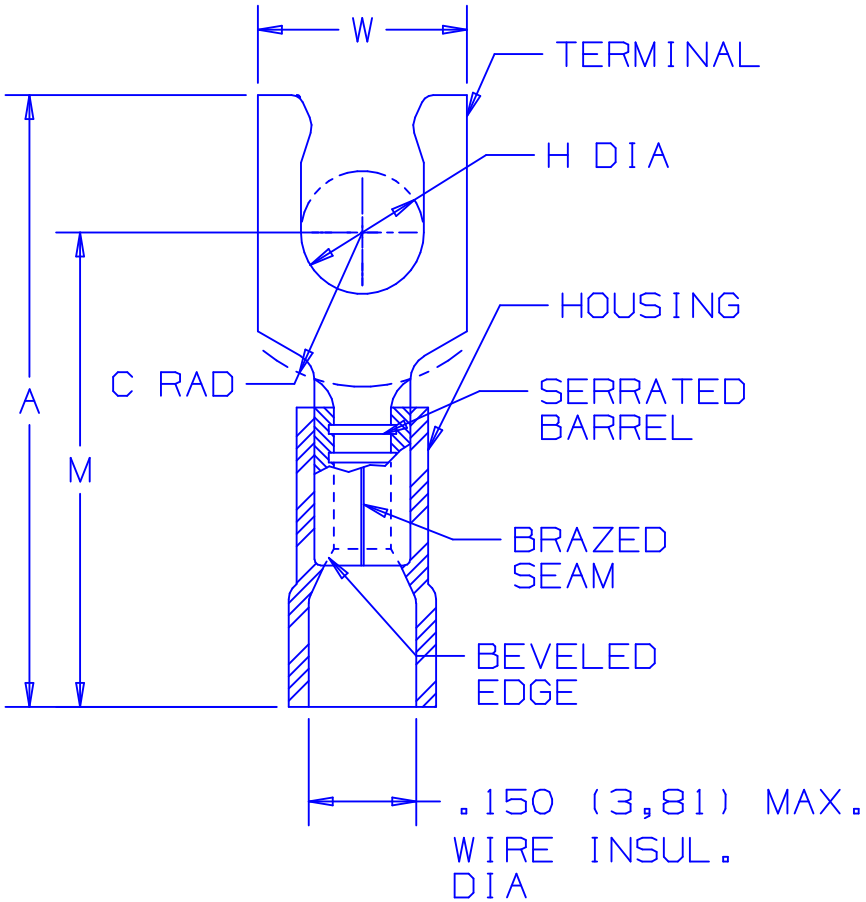

NOTES:

1. USED FOR:
   A. 600 MAX. VOLTAGE RATING(1000V. MAX. IN SIGNS, FIXTURES & LUMINARIES)
   B. #22-18 AWG STRANDED COPPER WIRE RANGE , WITH CT-100, CT-1550, CT-1551 INSTALLATION TOOLS.
   C. 221°F (105°C) MAX TEMP RATING -0 OF INSULATION MATERIAL. 167°F (75°C) MAX TEMP RATING WITH CT-100 INSTALLATION TOOL
2. WIRE STRIP LENGTH : 5/16 +1/32 (7,9 +0,8)
3. PACKAGE QUANTITY (SUFFIX TO BASIC PART NO.):
   A. STANDARD -C=100
   B. BULK -M=1000, -MY=1000
4. MATERIAL:
   A. STAMPING: .032 (,81) THICK TIN PLATED COPPER
   B. HOUSING; RED VINYL
5. DIMENSIONS IN BRACKETS ARE IN MILLIMETERS.

UL LISTED 587H E52164

CSA CERTIFIED LR31212

*PV18-10LFN IS NOT UL LISTED OR CSA CERTIFIED.

A41288_11

REV	DATE	BY	CHK	DESCRIPTION	ECN #	CUST	PM
11	5/05	JHNU		ADDED PACKAGING CODE "MY" TO DRAWING.			
10	1/01	RM	SKB	FILESPEC WAS N41288_09_PCD	08933	JAC	CCH
9	10/00	EJS		REMOVED CT-500, CT-550, ADDED CT-1550, CT-1551 TO NOTE 1-B, MAX. WIRE INSULATION, UPDATED NOTE 1-A TO (1000V. MAX. IN SIGNS, FIXTURES & LUMINARIES)	08802		
				DIAMETER WAS .158, REMOVED PART PV18-10LFW, ADDED PART PV18-10LFN TO TABLE, ADDED 167°F (75°C) MAX TEMP RATING WITH CT-100 INSTALLATION TOOL			
8	6/95	MS	RLS	PV18-6LF DIM "W" WAS .25/6,35	03388	LA	KRS

PANDUIT CORP. TINLEY PARK, ILLINOIS

#22-18 BARREL FUNNELED VINYL INSULATED LOCKING FORK, .150 (3,81) MAX. WIRE INSULATION DIAMETER

DRAWN BY	CHK'D	SCALE	DRAWING NO.
MS	LA	NONE	A41288