THIS DRAWING IS UNPUBLISHED. RELEASED FOR PUBLICATION , . – –
© COPYRIGHT – By – ALL RIGHTS RESERVED.

REVISIONS

| P | LTR | DESCRIPTION | DATE | DWN | APVD |
|---|---|---|---|---|---|
| | AJ4 | REVISED PER ECR–19–008948 | 12MAY2020 | J.P | D.Z |

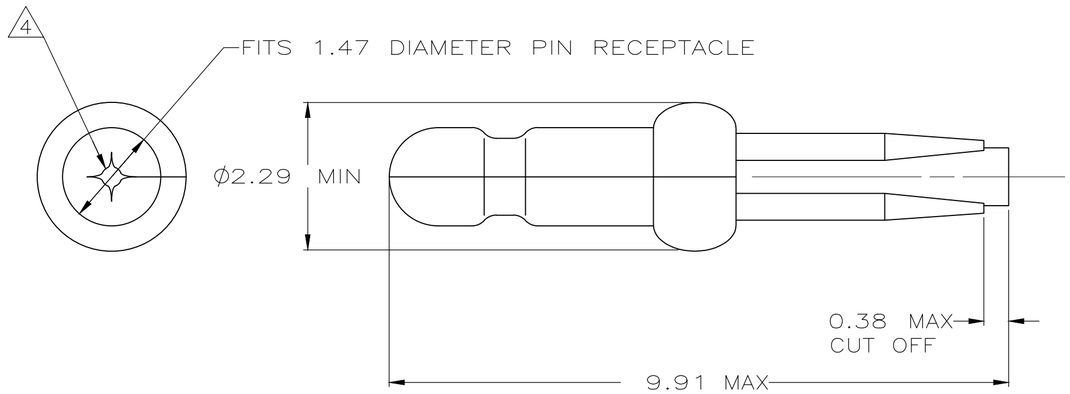


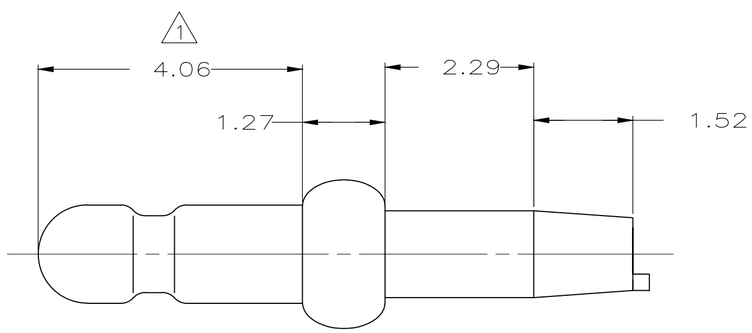


1. 0.00076 MIN GOLD PLATING IN THIS AREA WITH 0.00381 MIN MATTE TIN LEAD ON THE REMAINDER, BOTH OVER 0.00127 MIN NICKEL UNDERPLATE.
2. FITS 1.17 – 1.27 DIAMETER HOLE IN A 1.57 OR 2.36 PRINTED CIRCUIT BOARD.
3. PARTS TO COMPLY WITH AMP SOLDERABILITY SPECIFICATION 109–11–3.
4. 0.05 – 0.25 DIAMETER OPENING REQUIRED IN TIP OF PIN.
5. APPLICATOR FEED: 8.00 – 8.26
6. 0.00076 MIN GOLD PLATING IN THIS AREA WITH 0.00381 MIN MATTE TIN ON THE REMAINDER, BOTH OVER 0.00127 MIN NICKEL UNDERPLATE.

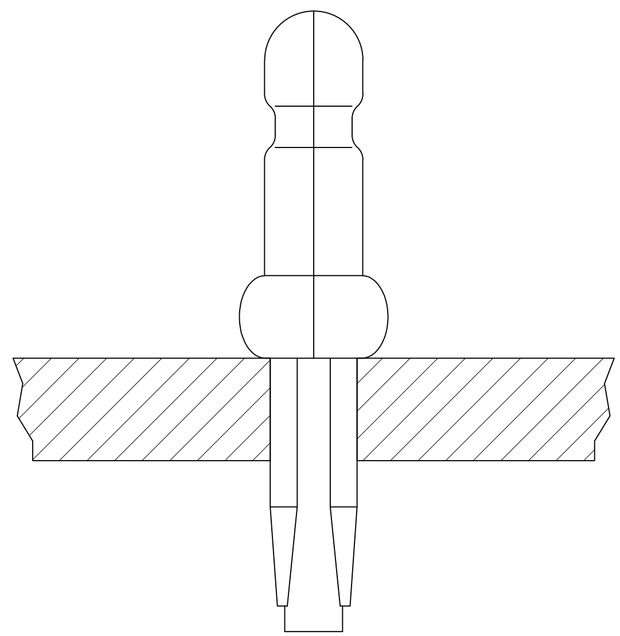

| | | |
|---|---|---|
| | 6 | 3–60803–1 |
| | PRE TIN | 60803–2 |
| SUPERSEDED BY 3–60803–1 | 6 | 60803–1 |
| | FINISH | PART NUMBER |

| | | | | | | | |
|---|---|---|---|---|---|---|---|
| 0.13 | .005 | 1.27 | .050 | 2.36 | .093 | – | – |
| 0.05 | .002 | 1.17 | .046 | 2.29 | .090 | 9.91 | .390 |
| 0.00381 | .000150 | 1.12 | .044 | 1.57 | .062 | 8.26 | .325 |
| 0.00127 | .000050 | 0.38 | .015 | 1.52 | .060 | 8.00 | .315 |
| 0.00076 | .000030 | 0.25 | .010 | 1.47 | .058 | 4.06 | .160 |
| MM | IN | MM | IN | MM | IN | MM | IN |

CONVERSION TABLE

METRIC

THIS DRAWING IS A CONTROLLED DOCUMENT.

DIMENSIONS: mm

TOLERANCES UNLESS OTHERWISE SPECIFIED:
0 PLC ± –
1 PLC ± –
2 PLC ± 0.13
3 PLC ± –
4 PLC ± –
ANGLES ± –

MATERIAL: 0.25 PH BRZ
FINISH: SEE TABLE

DWN T. BECK 7–28–97
CHK R. SWING 7–28–97
APVD A. BEDDICK 9–10–97
PRODUCT SPEC 108–1025
APPLICATION SPEC 114–1008
WEIGHT 0.000000
CUSTOMER DRAWING

TE Connectivity

NAME: PIN, .058 DIAMETER, PHOSPHER BRONZE, PRESS FIT, LOOSE PIECE, P.C. CONTACT

SIZE A2 | CAGE CODE 00779 | DRAWING NO C–60803 | RESTRICTED TO –

SCALE 15:1 | SHEET 1 OF 1 | REV AJ4

60803

1471–9 (1/15)