ITEM NO.	PART NUMBER	DESCRIPTION	QTY.	COMPONENT NOTES
1	54-00167	Connector, dc jack 5.5x2.5 mm, PCB mount, 90°, nickel plated, PBT, thru hole	1	
2	901471102	Receptacle, 2 position, 0.1" Tin PCB	5	Or functional equivalent, 3 A
3	1708042	Terminal block, 4 position, 6 A, screw connection, 16 - 26 AWG	1	Or functional equivalent, 6 A
4	64-00000	PCB, 65x20x1.57 mm, M3 mounting holes	1	black

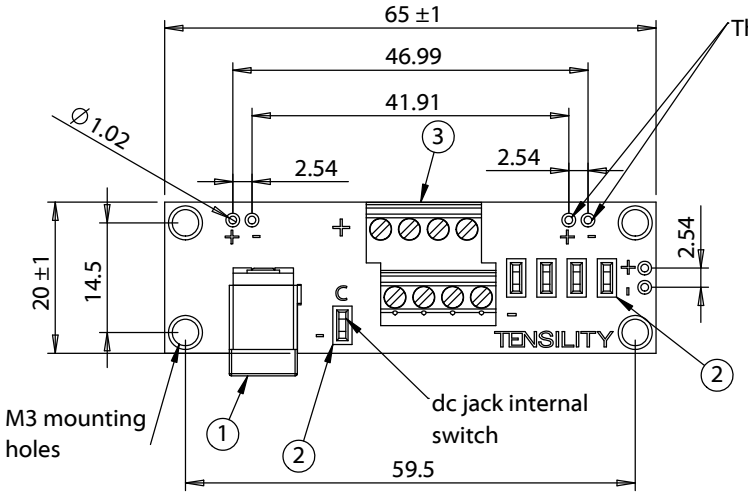

Through holes for optional breadboard attachment

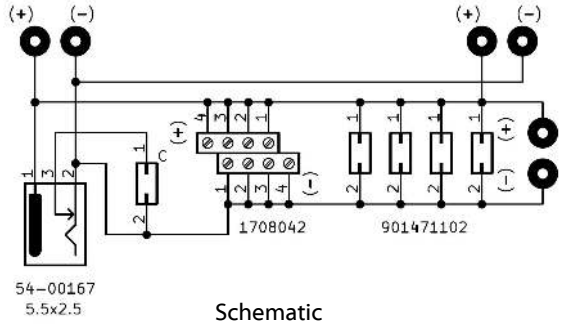

Schematic

Board max current: 6 A (30 °C temperature rise)	
Connector	Current rating
54-00166	6 A
1708042	6 A
901471102	3 A
Through hole	1 A

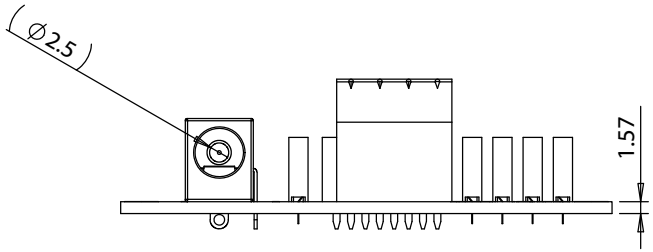

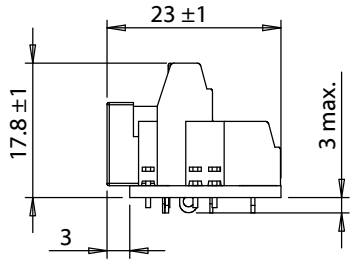

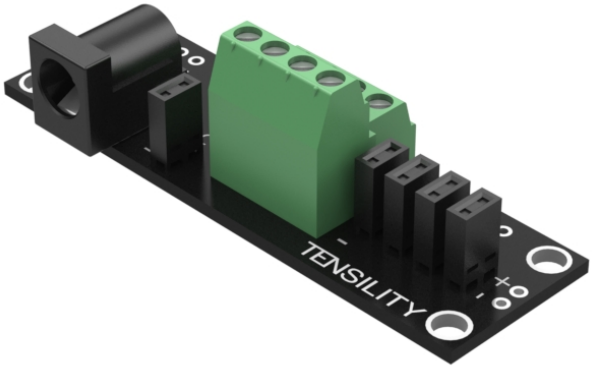

Notes:
Distribution board does not regulate voltage or current
Max voltage: 48 V
Max operating temperature: 70 °C

Revision:	Date:	Description:
A	4/13/2020	Initial release

Prepared: AG — Digitally signed by AG Date: 2020.04.13 13:04:58 -07'00'

Verified: AW — Digitally signed by AW Date: 2020.04.13 13:22:50 -07'00'

Dimensions are in millimeters.
Tolerances:
X: ± 0.5 mm
X.X: ± 0.3 mm
X.XX: ± 0.1 mm

Notes:
RoHS compliant
Function test: no open, no short circuit, no intermittent

Description:
PCB Assembly, dc distribution, 5.5x2.5 jack to 4 pole terminal block + 4x 0.1" 2 pos recept

TENSILITY
tel 1.541.323.3228 800 877.670.7118
fax 1.541.323.4202 web tensility.com

Size: A
Part number: 60-00001
Scale: 1:1
Sheet 1 of 1

5 4 3 2 1

To see a custom version of this cable assembly, call Tensility at 541-323-3228 or email engineering@tensility.com