DRAWING MADE IN THIRD ANGLE PROJECTION

© COPYRIGHT 1964 BY AMP INCORPORATED, HARRISBURG, PA.
ALL INTERNATIONAL RIGHTS RESERVED. AMP INCORPORATED PRODUCTS COVERED BY U. S. AND FOREIGN PATENTS AND/OR PATENTS PENDING.

LOC AF | DIST 50

REVISIONS

P	F	ZONE	LTR	DESCRIPTION	DATE	APPROVED
			J	REDRAWN & REVISED A-3943	6/22/78	DG SS

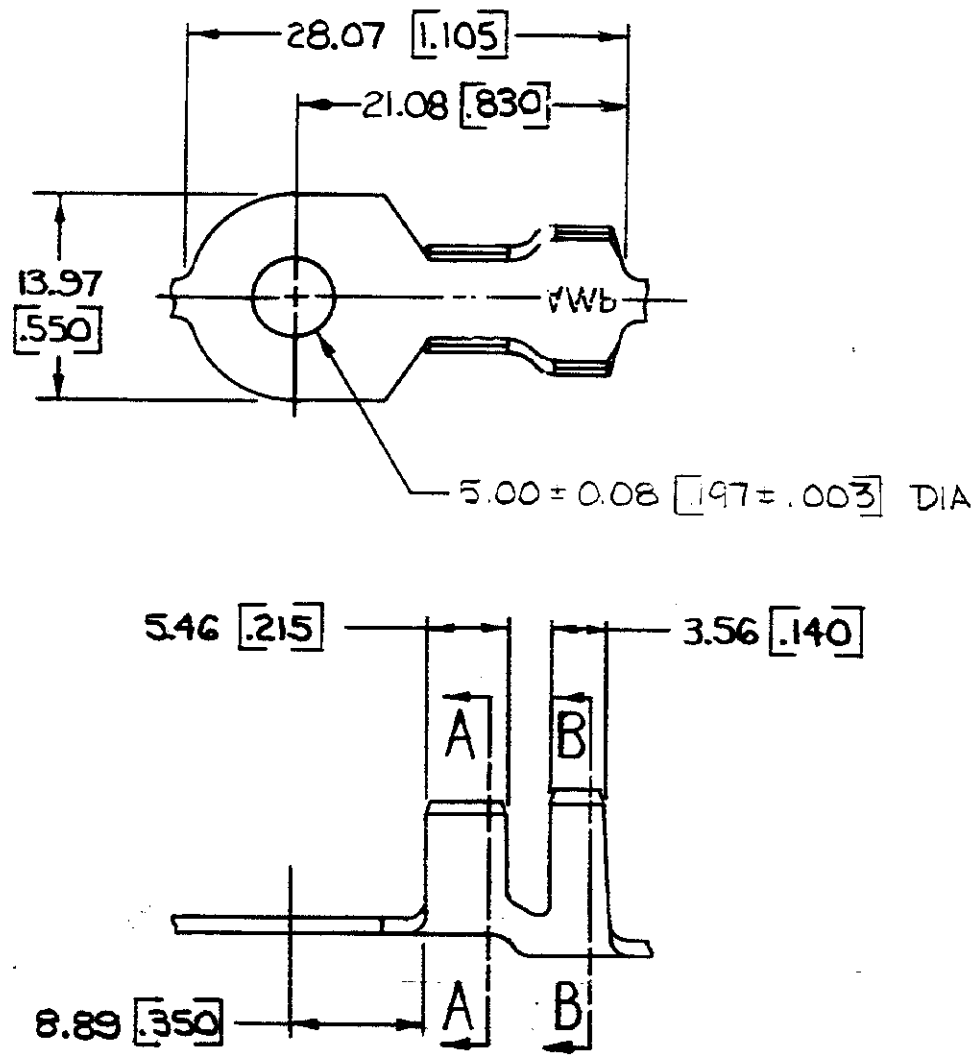

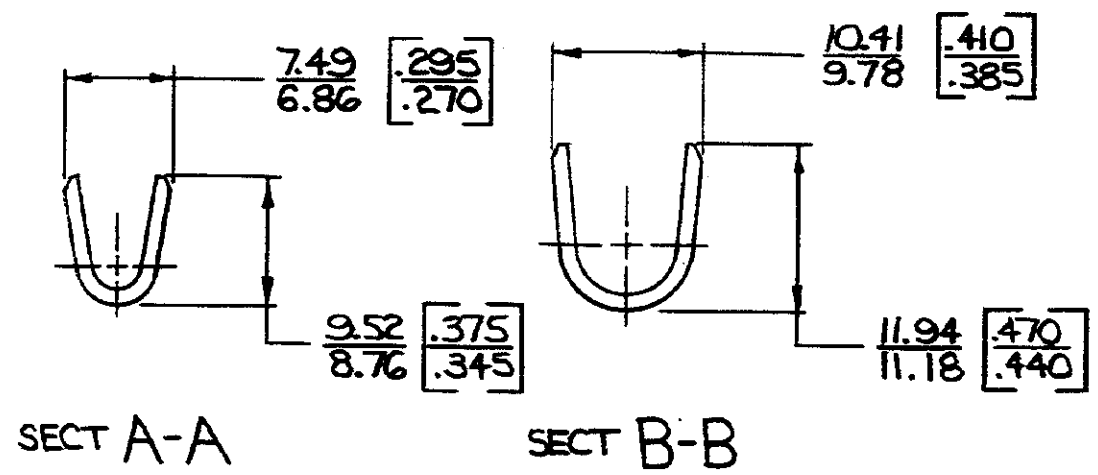

1. CONTINUOUS STRIP ON REELS.
2. DIMENSIONS IN BRACKETS ARE IN INCHES.

STUD SIZE	INSULATION RANGE	WIRE RANGE	FINISH	MATERIAL	PART NO
#10	5.59 - 8.00 [.220 - .315]	5.0 - 8.5 mm² [10 - 8]	TIN	1.27 [.050] COPPER	41808

UNLESS OTHERWISE SPECIFIED DIMENSIONS ARE IN [redacted] mm
TOLERANCES ON: DECIMALS ±0.38 [.015] ANGLES ±1° 0'

MATERIAL: SEE TABLE

FINISH: SEE TABLE

CONTRACT NO

DR Donald G. Hand 6/22/78

CHK S. Schoffstall 7/19/78

APPD R.P. Frantz 8-1-78

APPD C. Zlotko 8-1-78

DSGN APPD

OTHER APPD

AMP INCORPORATED Harrisburg, Pa.

NAME: RING

SIZE: B | CODE IDENT NO: 00779 | DRAWING NO: 41808

SCALE: — | SHEET

METRIC

AMP 1470-15 (7-73)

CUSTOMER DRAWING