APPROVED: _____

DATE: _____ TITLE: _____

Rev	AWO #	Description	Date	Appr
-		RELEASED	4/2/19	
A		ADDED SPEC.	4/23/19	OW/AC
B		CHANGED TITLE	12/2/19	SS

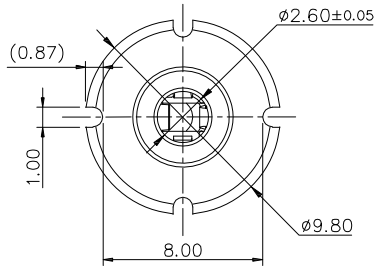

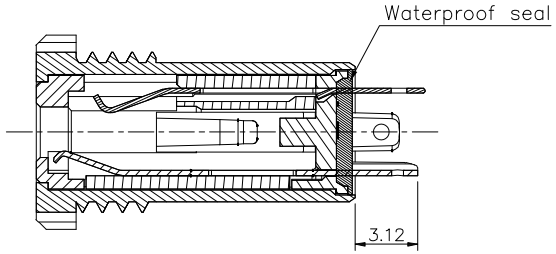

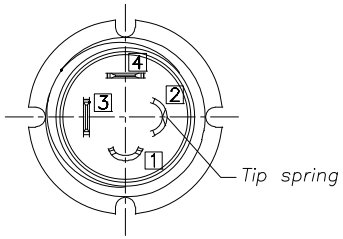

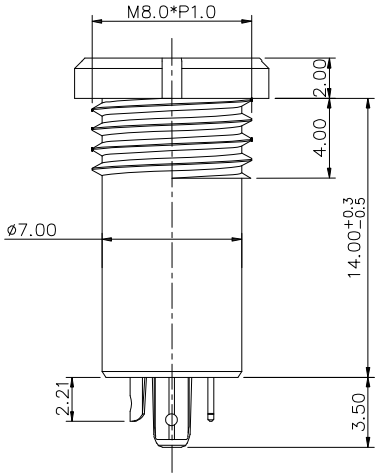

Model No.	ASJ-203C-M-WP
Schematic	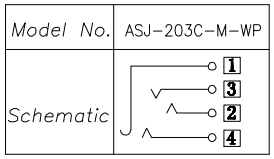

Circuit Diagram □: Terminal No.

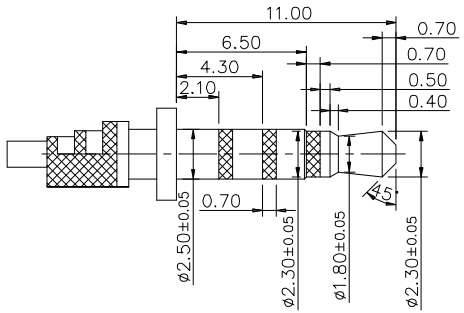

RECOMMENDED PLUG
ø2.5 4-POLESTANDARD PLUG

SPECIFICATIONS:

Material:

Housing: (PA10T) Hi-Temp Thermoplastic, reated UL94V-0, Color: Black
Spring: Phosphor Bronze, Silver plated
Tip Spring: Steel Alloy, Silver plated
Bushing: Copper Alloy, Nickel plated

Electrical:

Rating: 30VDC, 0.5A
Contact Resistance: 100 mohm max.
Insulation Resistane: 100 Mohm min. @ 500 VDC
Dielectric withstanding voltage: 500 VAC

Temperature Rating:

Operating temperature: −20°C to +70°C

Environmental:

Waterproof Resistant
Lead free, RoHS compliant.

RoHS COMPLIANT

UNLESS OTHERWISE SPECIFIED
ALL DIMENSIONS ARE MILLIMETERS
TOLERANCES: EXCEPT AS NOTED

MM		ANGLES	
.X	± 0.38	X	± 5°
.XX	± 0.30	.X	± 3°
.XXX	± 0.15	.XX	± 2°

APPROVALS		DATE
DRAWN	OW	4/2/19
CHECKED	AC	4/2/19
APPROVED		

ADAM TECH INTERCONNECTS
909 Rahway Avenue,
Union, NJ 07083
Phone: 908-687-5000
Fax: 908-687-5710

TITLE: STEREO JACK, 2.5mm, WATER RESISTANT

SIZE	PART NO.	REV.
X	ASJ-203C-M-WP	B

REF: S00002C | SCALE: NTS | SHEET 1 OF 1