A	NX303CB1B

FOR REFERENCE ONLY

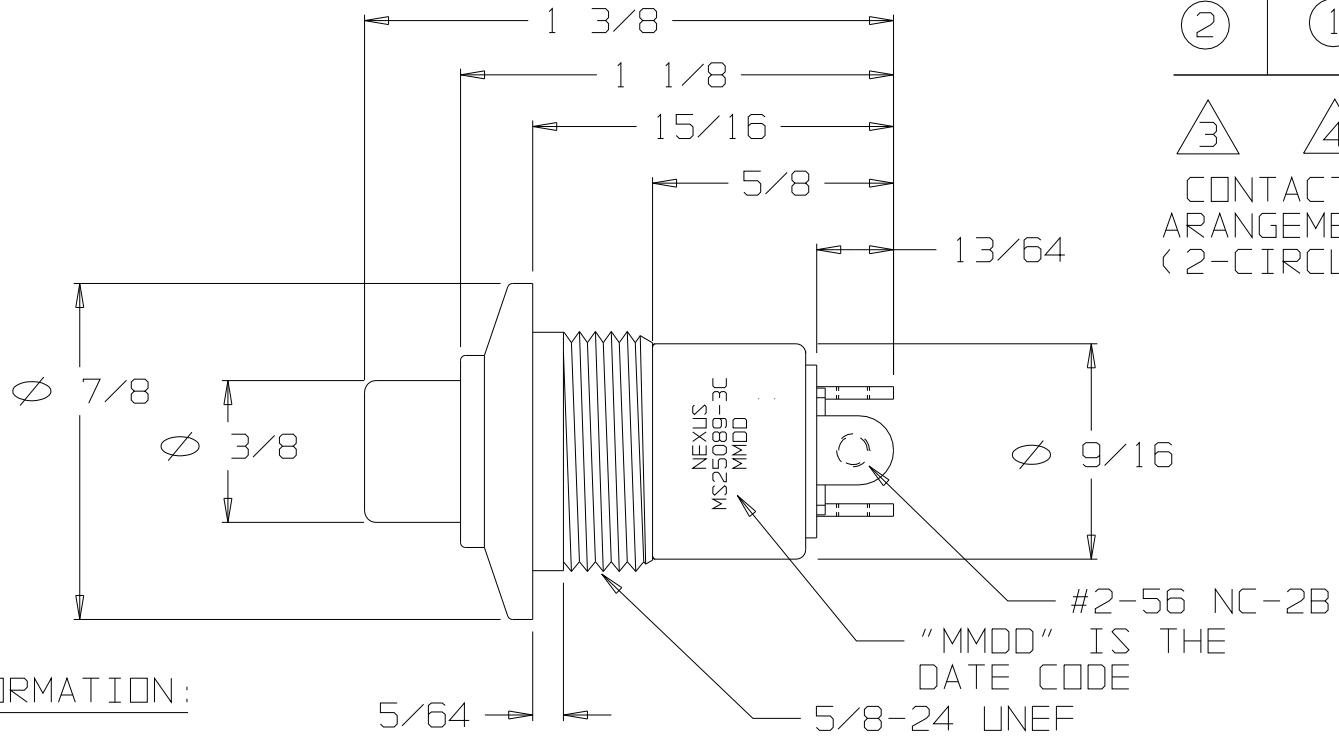

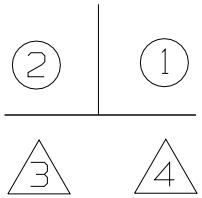

CONTACT
ARANGEMENT
(2-CIRCUIT)

ORDERING INFORMATION:

NX303CB1B
SWITCH ONLY
NX303CB1B-60
SWITCH & MOUNTING NUT
AND LOCK WASHER
NX303CB1B-61
SWITCH, MOUNTING NUT
AND LOCK ASHER &
TERMINALHARDWARE

DUSTPROOF MOMENTARY SWITCH
2 CIRCUIT (CAN BE JUMPERED FOR SPDT)
ADAPTER TYPE "C", COLOR BLACK
BUTTON #1, COLOR RBLACK

THIS DOCUMENT CONTAINS PROPRIETARY INFORMATION OF NEXUS, INCORPORATED AND SUCH INFORMATION MAY NOT BE DISCLOSED TO OTHERS FOR ANY PURPOSE OR USED FOR ANY PURPOSE WITHOUT THE WRITTEN CONSENT OF NEXUS.

DWN. BY EWT	DATE 3/8/05	MATERIAL N/A	
CHECKED BY	DATE	FINISH N/A	
APPR. BY	DATE	WEIGHT ———	SCALE 2:1
UNLESS OTHERWISE SPECIFIED DIMENSIONS ARE IN INCHES TOLERANCES ON .XX ——— .XXX ±.003 ANGLES ±.5°		TITLE SWITCH MOMENTARY MS25089-3C	
		DO NOT SCALE DWG.	SHEET 1 OF 1

NEXUS
STAMFORD, CONN

SIZE A — DWG. NO. NX303CB1B

LET.	REVISION	CN #	DATE	CHK.