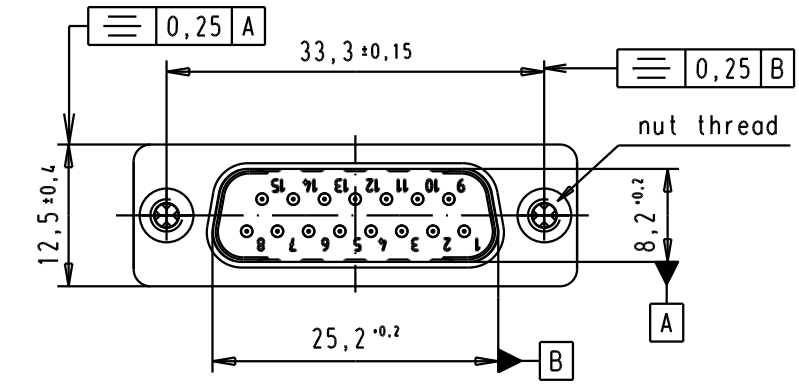

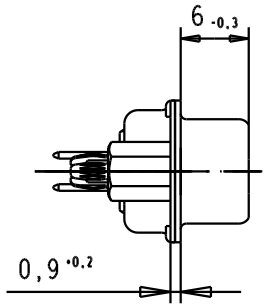

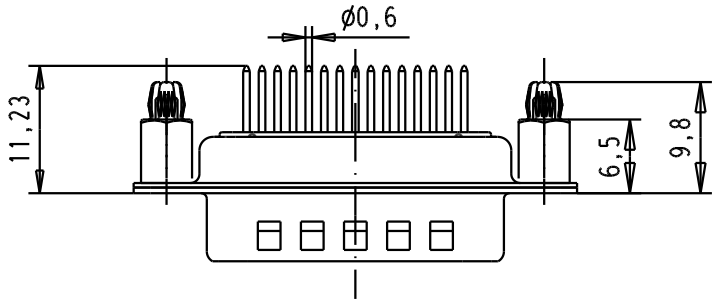

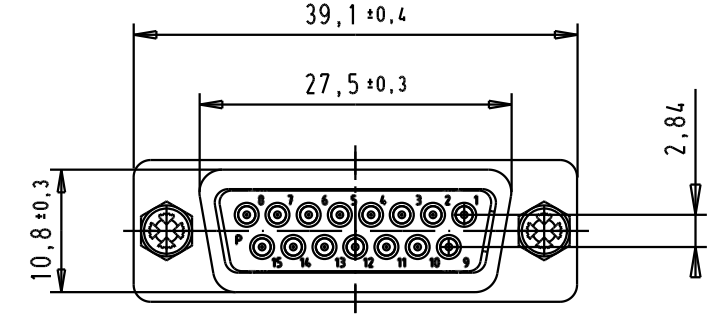

PCB Layout, Component side

PCB thickness 1,6 mm

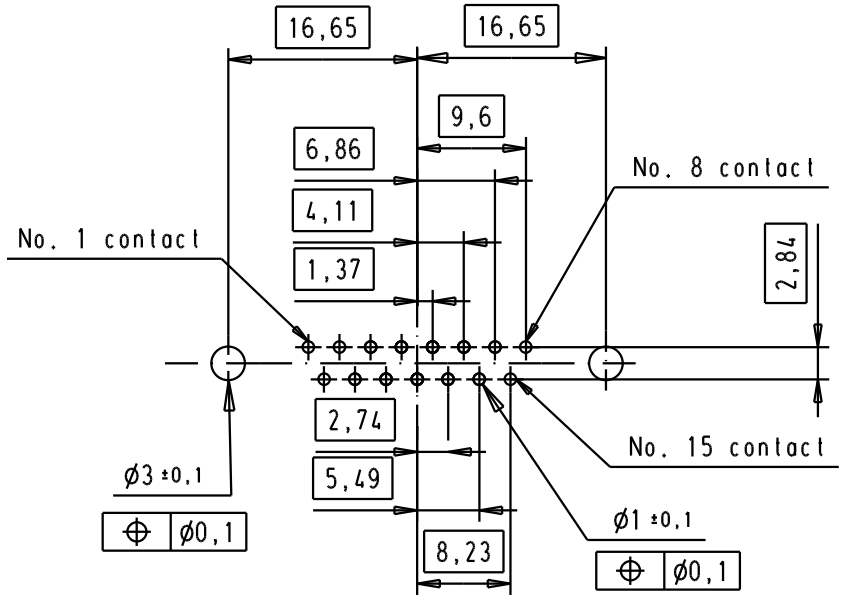

SPECIFICATION

Mating Cycles	500
Filter type	C
Capacitance	47pf±20%
Working Voltage	100v
Current Rating	7,5A
Insulation Resistance	>1GΩ

FREQUENCY (MHz)	ATTENUATION dB
5	-
10	-
50	-
100	-
500	30dB
1000	35dB

							Dat.	Name			Ma?Mstab/ Scale
						Detail.	8-JUL-02	CV	All Dim. in mm Orig. Size DIN A 4	D-Sub, male, straight, 15 Poles, solder pins, tin plated shell with dimples , spacer nuts and board-locks	1.5:1
						Insp.					
						Stand.					
09642227216	M3		33267	17/11/05	JMDR	HARTING EURL F-95972 Paris				TB 0964222721x	Blatt/ Page 2/3
09642227215	UNC 4-40		31058	8-JUL-02	CV						
Part number	Nut thread		Mod.	Dat.	Name					Sub.	