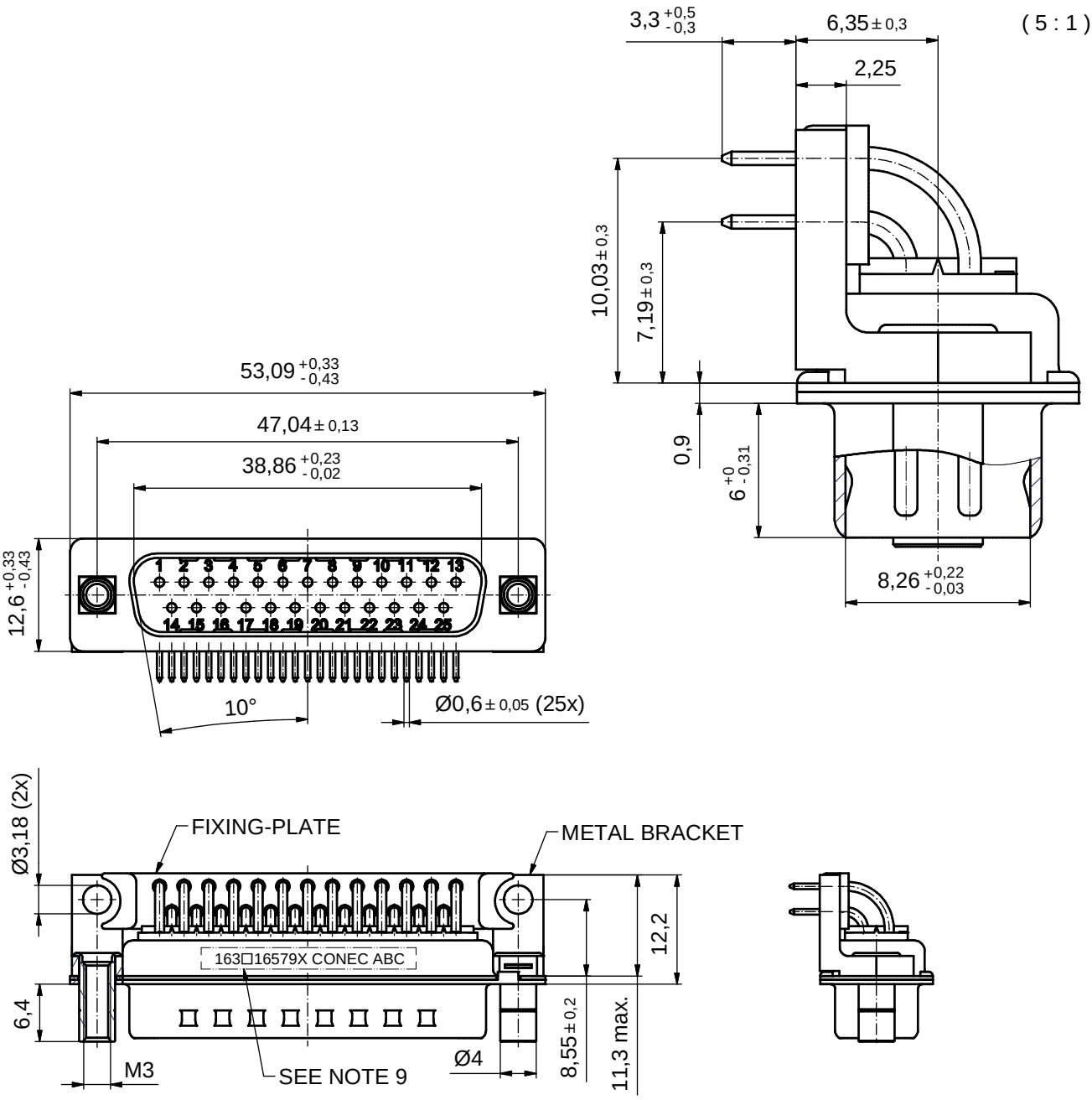

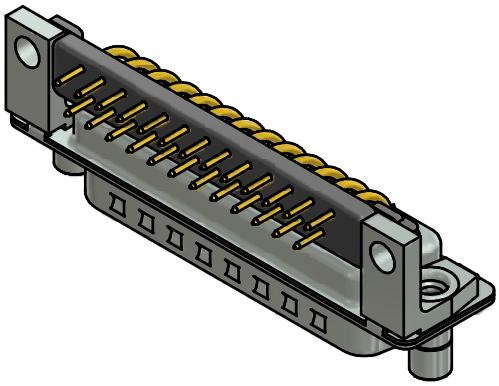

NOTES:

1. METALSHELLS: STEEL; min. 315µin TIN over 40-80µin NICKEL
2. INSULATORS: PBT GF UL 94 V-0; BLACK
3. CONTACTS: COPPER ALLOY; PLATING (SEE PART-NO.):
   - ☐ PLEASE ADD A for GOLD FLASH over NICKEL (PREFERRED TYPE)
   - ☐ PLEASE ADD B for 20µin HARD GOLD over min. 50µin NICKEL
   - ☐ PLEASE ADD C for 30µin HARD GOLD over min. 50µin NICKEL
4. METAL BRACKETS: ZINC DIE CAST; 300µin COPPER/40-120µin NICKEL/120-200µin TIN
5. THREADED LOCKS: COPPER ALLOY; min. 200µin TIN over 80µin NICKEL
6. FIXING-PLATE: PBT GF UL 94 V-0; BLACK
7. P.C.B. HOLE DRILLINGS ON SHEET 2
8. MAXIMUM TORQUE VALUE FOR THREAD: 6 in.LB
9. CONNECTOR IS PART MARKED: 163□16579X CONEC ABC (see note 3)

RoHS compliant

THIS DRAWING MAY NOT BE COPIED OR REPRODUCED IN ANY WAY, AND MAY NOT BE PASSED ON TO A THIRD PARTY WITHOUT WRITTEN PERMISSION. OWNERSHIP AND COPYRIGHT OF CONEC GmbH

DO NOT ALTER CAD DRAWING BY HAND

rev.	description	date	name
1 x b	Ä 5843	05.10.15	L.U.
a	Original		

tolerance — dim. in mm

	date	name
drawn	30.09.15	Unkrüer
appd.	01.10.15	Lehmenkühler
norm		
d-old	16K1IMUA/16K1A1185	

CONEC®

scale: 2:1 (5:1)
material: SEE NOTES

title:
D-SUB MALE 90°
25pos. SOLDER PIN ANGLED 0.318inch
threaded lock and metal bracket

dwg no: 16K1A3722 (b)
DIN-A3
sh: 1/2

part no: 163□16579X (see note 3)

P.C.B. HOLE DRILLINGS
(P.C.B. TOP SIDE)

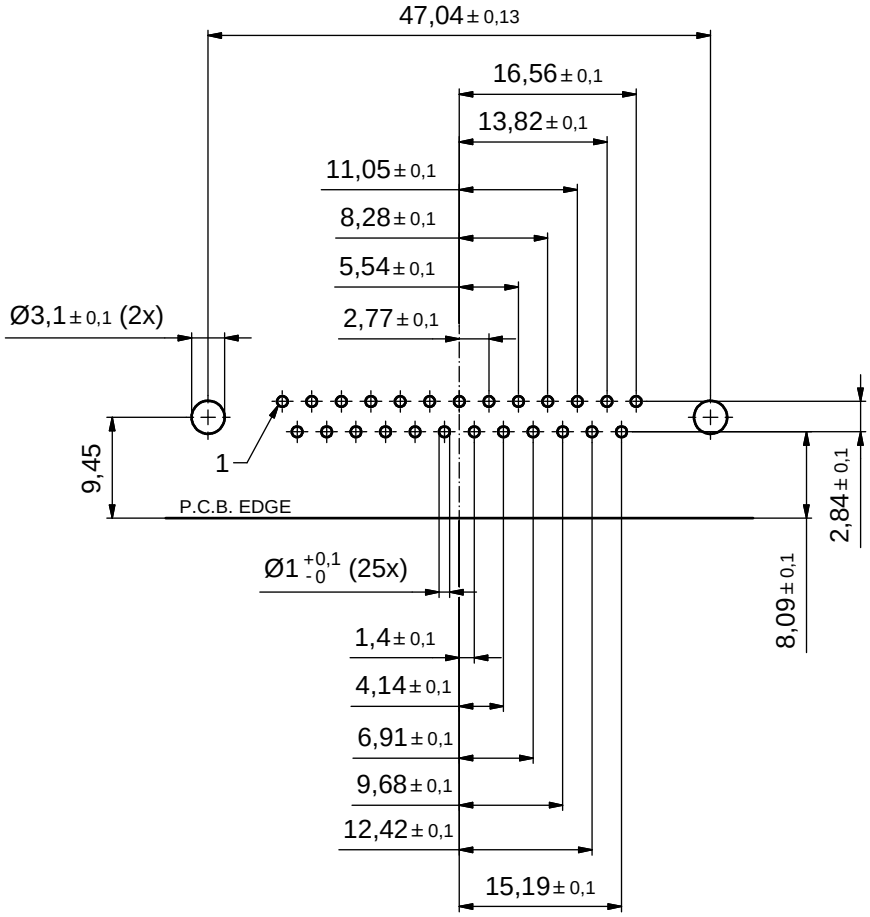

THIS DRAWING MAY NOT BE COPIED OR REPRODUCED IN ANY WAY, AND MAY NOT BE PASSED ON TO A THIRD PARTY WITHOUT WRITTEN PERMISSION. OWNERSHIP AND COPYRIGHT OF CONEC GmbH

DO NOT ALTER CAD DRAWING BY HAND

rev.	description	date	name
a	Original		

tolerance — dim. in mm

	date	name
drawn	30.09.15	Unkrüer
appd.	01.10.15	Lehmenkühler
norm		
d-old		

CONEC®

scale: 2:1
material: SEE SHEET 1

title: P.C.B. HOLE DRILLINGS
D-SUB Male 90° 25pos. 0.318inch
threaded lock and metal bracket

dwg no: 16K1A3722
DIN-A3
sh: 2/2

part no: SEE SHEET 1