DIGITAL MULTI-PHASE GPU BUCK CONTROLLER

FEATURES

- 6-phase & 8-phase dual output PWM Controller
- Phases are flexibly assigned between Loops 1 & 2
- Intel® VR12, AMD® SVI/PVI/G34 & Memory modes
- Overclocking & Gaming Mode with Vmax setting
- Switching frequency from 200kHz to 1.2MHz per phase
- CHiL Efficiency Shaping Features including Variable Gate Drive, Dynamic Phase Control
- Programmable 1-phase or 2-phase for Light Loads and Active Diode Emulation for Very Light Loads
- CHiL Adaptive Transient Algorithm (ATA) on both loops minimizes output bulk capacitors and system cost
- Designed for use with coupled inductors
- Auto-Phase Detection with auto-compensation
- Per-Loop Fault Protection: OVP, UVP, OCP, OTP, CFP
- I2C/SMBus/PMBus system interface for telemetry of Temperature, Voltage, Current & Power for both loops
- Non-Volatile Memory (NVM) for custom configuration
- Compatible with CHiL ATL and 3.3V tri-state Drivers
- +3.3V supply voltage; 0ºC to 85ºC ambient operation
- Pb-Free, RoHS, 7x7 48 pin & 8x8 56 pin QFN packages

DESCRIPTION

The CHL8326/8 are dual-loop digital multi-phase buck controllers. The CHL8326 drives up to 6 phases and the CHL8328 drives up to 8 phases. The CHL8326/8 is fully Intel® VR12 and AMD® SVI/PVI compliant on both loops and provides a Vtt tracking function for DDR memory.

NVM storage saves pins and enables a small package size.

The CHL8326/8 includes the CHiL Efficiency Shaping Technology to deliver exceptional efficiency at minimum cost across the entire load range. CHiL Variable Gate Drive optimizes the MOSFET gate drive voltage based on real-time load current. CHiL Dynamic Phase Control adds/drops phases based upon load current. The CHL8326/8 can be configured to enter 1-phase operation and active diode emulation mode automatically or by command.

CHiL's unique Adaptive Transient Algorithm (ATA), based on proprietary non-linear digital PWM algorithms, minimizes output bulk capacitors. In addition, a coupled inductor mode, with phases added/dropped in pairs, enables further improvement in transient response and form factor.

The I2C/PMBus interface can communicate with up to 16 CHL8326/8 based VR loops. Device configuration and fault parameters are easily defined using the CHiL Intuitive Power Designer (IPD) GUI and stored in on-chip NVM.

The CHL8326/8 provides extensive OVP, UVP, OCP and OTP fault protection and includes thermistor based temperature sensing with VRHOT signal.

The CHL8326/8 also includes numerous features like register diagnostics for fast design cycles and platform differentiation, truly simplifying VRD design and enabling fastest time-to-market with its "set-and-forget" methodology.

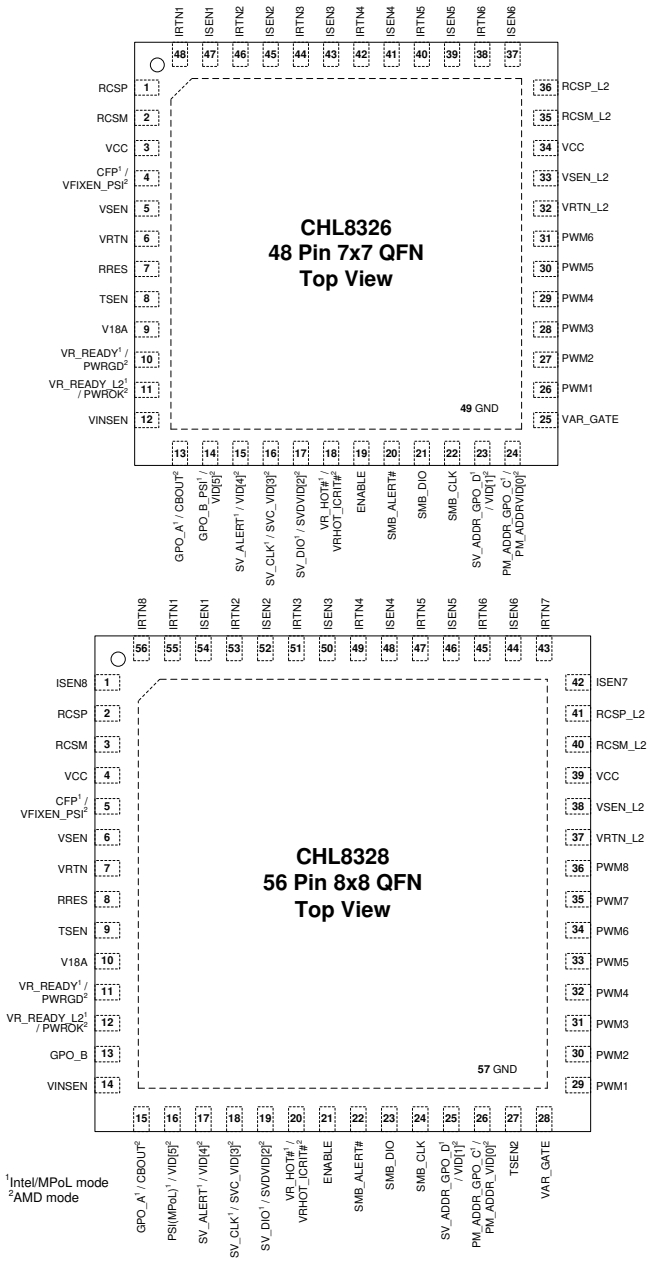

Figure 1: CHL8326 & CHL8328 Packages

APPLICATIONS

- Intel® VR12 & AMD® SVI & PVI based systems
- DDR Memory with Vtt tracking
- Overclocked & Gaming platforms

Trademarks and registered trademarks are the property of the respective owners.

One Highwood Drive, Tewksbury, MA 01876
Tel: +1(978)-640-0011
www.chilsemi.com

© 2010 CHiL Semiconductor Corp. All rights reserved

TYPICAL APPLICATIONS BLOCK DIAGRAM

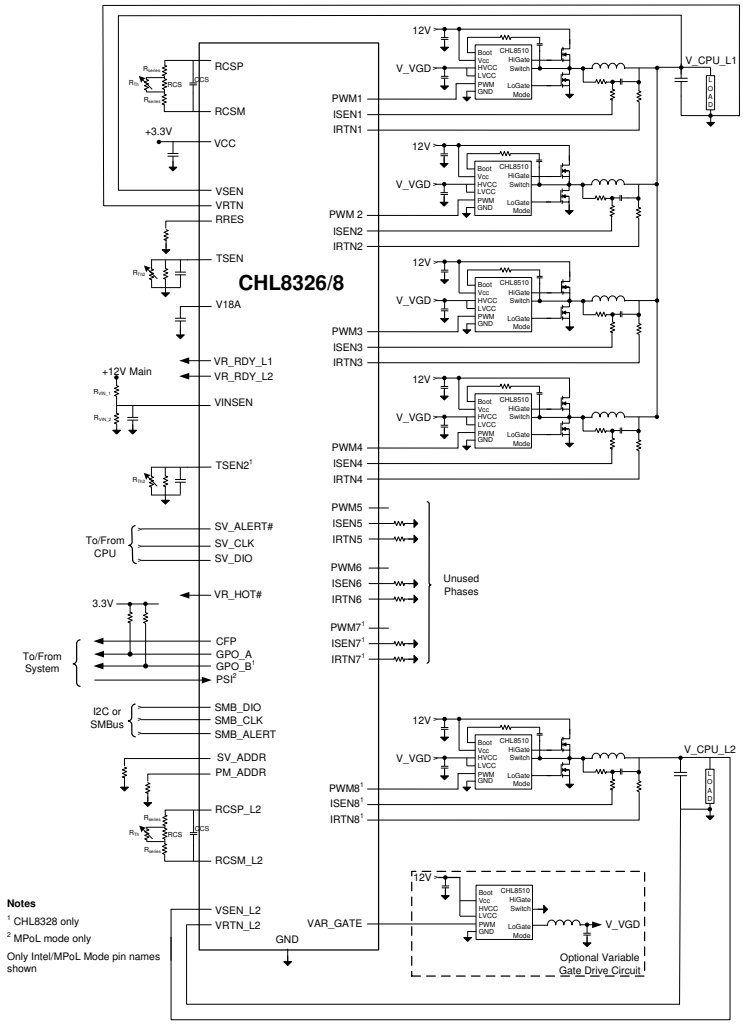

ORDERING INFORMATION

CHL832 □ - □ □ □ □ □

- T: Tape & Reel
- Package type
  - R : QFN
- Operating Temperature
  - C: Commercial
- xx: Configuration file
- Part
  - 6: CHL8326
  - 8: CHL8328

Package	Tape & Reel Qty	Part Number
QFN	3000	CHL8326-00CRT[1]
QFN	3000	CHL8326-xxCRT[2]
QFN	3000	CHL8328-00CRT[1]
QFN	3000	CHL8328-xxCRT[2]

Notes

1 For unprogrammed/default parts, use configuration file 00. Unprogrammed parts will not start up until programmed in order to insure a safe power up.

2 -xx indicates a customer specific configuration file.