NOTES

Pieces assembly
Packaging : per 100 piece
Material : steel
Plating : yellow chromate cadmium
Thread : UNC 4.40

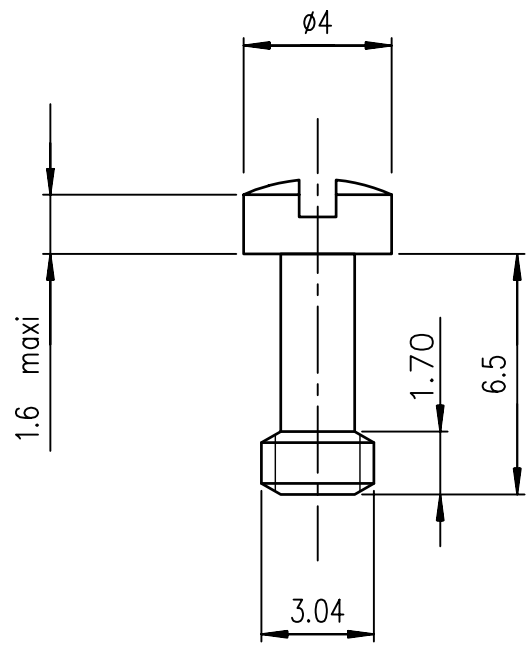

ASSEMBLY VIEW

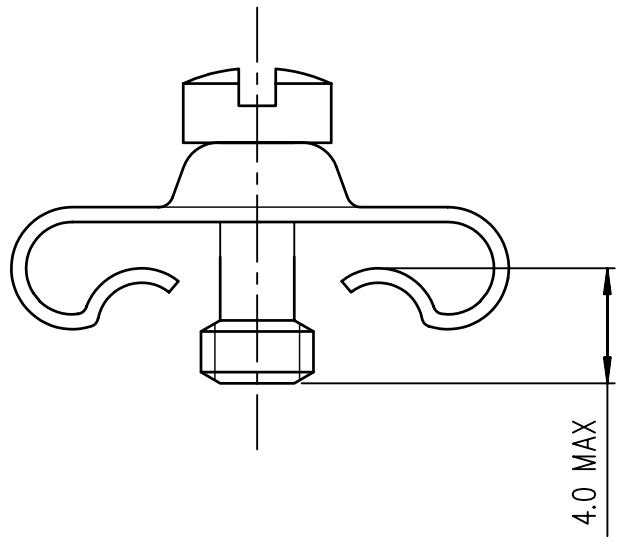

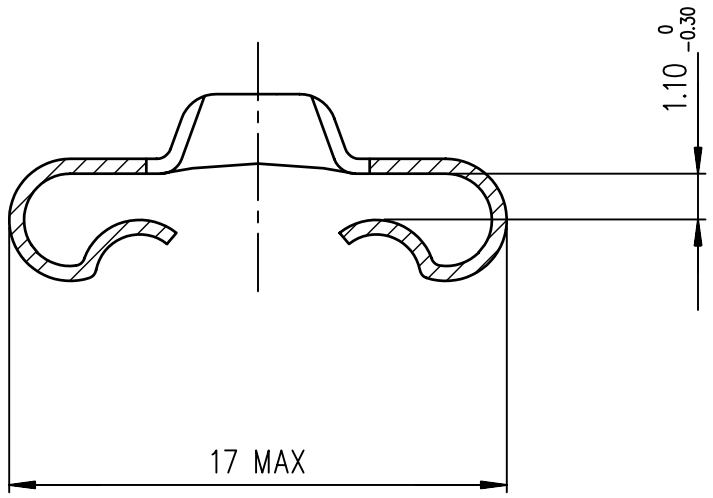

Part Number	863003A

European Views

www.fciconnect.com			surface ISO 1302 ✓		tolerance std ISO 406 ISO 1101		projection	mm
			TOLERANCES UNLESS OTHERWISE SPECIFIED					
Dr	JOUBERT	1998/03/27	ANGULAR	LINEAR	0.X	±0.1	size A3	Scale 5
Eng	M.PESSON	1998/03/27			0.XX	±0.1		
Chr	ABHILASH	2011/01/25	0.XX° ±2°		0.XXX	±0.1	ECN	ELX-H-011686
Appr	SUDHIR	2011/01/25	Product family			D-SUB	Spec ref	-

title	MALE SCEW LOCKS SHELL 50 D SUB ACCESSORIES	dwg no	C01-8655-0710	Rev. H
catalog no	-		CUSTOMER	sheet 1 of 1

rev	ecn no	dr	date
H	ELX-H-011686	PK	2012/05/21
B	LS06-0101	MPE	2006/06/27
C	LS07-0001	MPE	2007/01/02
D	LS09-0006	PCR	2009/01/08
E	I11-0022	AMR	2011/01/25
F	I11-0165	PK	2011/10/05
G	ELX-H-011663	PK	2012/05/09

REV F - 2006-04-17

Copyright FCI.

PDS: Rev :H STATUS:Released Printed: May 22, 2012