© – TE Connectivity. All Rights Reserved.

REVISIONS					
P	LTR	DESCRIPTION	DATE	DWN	APVD
	L8	PER ECR-23-172954	21APR2023	GK	RE

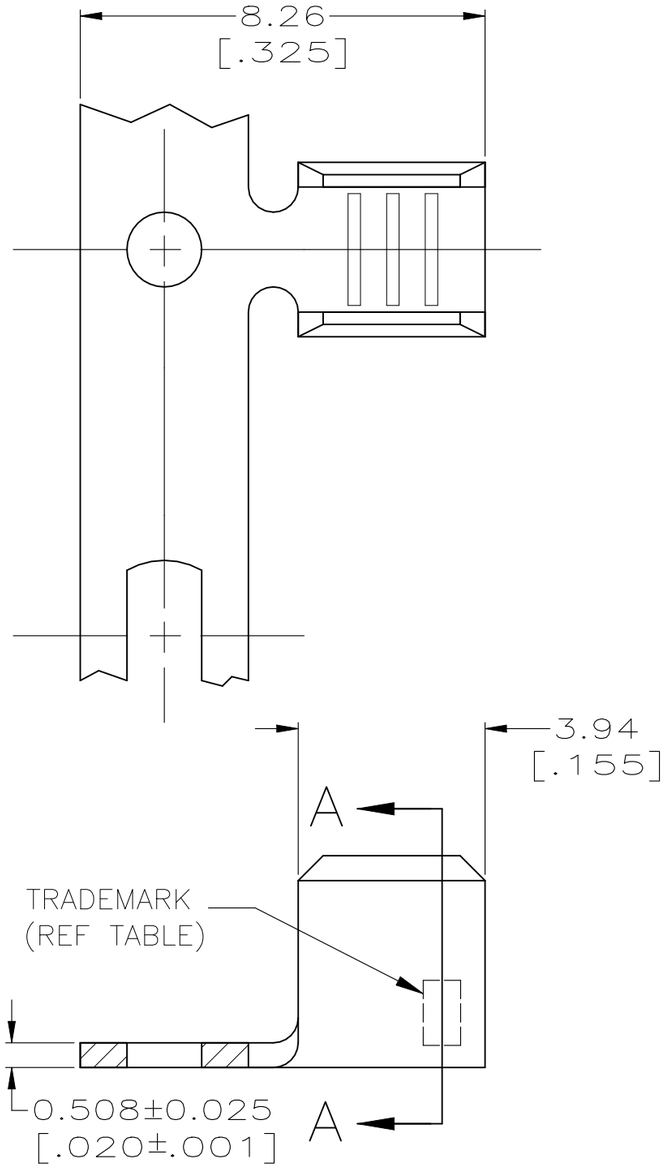

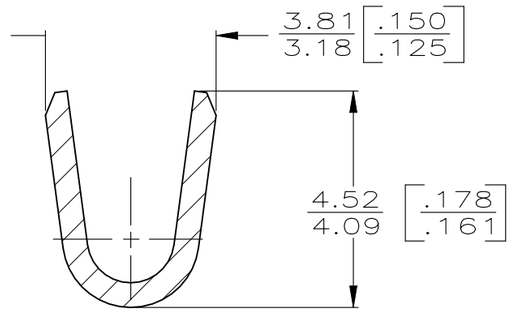

SECTION A–A
SCALE 10:1

1 PRODUCT PROVIDED IN STRIP FORM ON REELS, BREAKS MAY BE PRESENT.

2 CRIMP WIDTH, .110 F TYPE
CRIMP HEIGHT (±.002) = (TOTAL CMA + 11,300) / 176,700

3 PRELIMINARY – NOT FOR PRODUCTION.

4 WIRE RANGE FOR NEW APPLICATIONS: 1500–5000 CMA (WIRE RANGE APPROVED FOR APPLICATIONS IMPLEMENTED PRIOR TO 2005: 1970–4940 CMA).

5 OBSOLETE PARTS: OBSOLETE CIS STREAMLINING PER D.RENAUD/D.SINISI

6 CUSTOMER SPECIAL PACKAGING AND LABELING

	MATERIAL	FINISH	REELING	TRADEMARK	PART NUMBER
3	BRASS	NONE	REVERSE	TE	1–63130–0
6	BRASS	TIN		AMP	63130–9
	STEEL	NICKEL			3 63130–8
	COPPER–NICKEL	NONE			3 63130–7
5 OBSOLETE	PHOS BRONZE	TIN			~~63130–4~~
	BRASS				63130–3
		NONE			63130–2
OBSOLETE			~~STANDARD~~		~~63130–1~~

THIS DRAWING IS A CONTROLLED DOCUMENT.

DIMENSIONS: INCHES

TOLERANCES UNLESS OTHERWISE SPECIFIED:
0 PLC ± –
1 PLC ± –
2 PLC ± 0.25 [.010]
3 PLC ± –
4 PLC ± –
ANGLES ± –

MATERIAL: SEE TABLE
FINISH: SEE TABLE

DWN PHILLIP M FORTNEY 17/JAN/96
CHK JEFF R RUTH 17/JAN/96
APVD DENNIS SCHWENK 17/JAN/96
PRODUCT SPEC 108–106466
APPLICATION SPEC 114–2088
WEIGHT –

TE Connectivity

NAME: SPLICE –

SIZE	CAGE CODE	DRAWING NO	RESTRICTED TO
A3	00779	C–63130	–

CUSTOMER DRAWING | SCALE 8:1 | SHEET 1 OF 1 | REV L8