NOTES:

1. MATERIALS AND FINISHES:
   BODY & COUPLING NUT - BRASS, NICKEL PLATING
   INSULATOR & INSULATOR DISC - PTFE, NATURAL
   CONTACT - BRASS, GOLD PLATING
   GASKET - SILICONE RUBBER, RED
   RETAINING RING - STAINLESS STEEL, NATURAL
   FERRULE - BRASS, NICKEL PLATING

2. ELECTRICAL:
   A. IMPEDANCE: 50 OHM
   B. FREQUENCY RANGE: DC - 20 GHz
   C. VSWR (RETURN LOSS): 1.20 MAX. (-20.83 dB MIN.) @ DC - 12.4 GHz
      1.28 MAX. (-18.22 dB MIN.) @ 12.4 - 20 GHz
   D. DIELECTRIC WITHSTANDING VOLTAGE: 1000 VRMS MIN.

3. MECHANICAL:
   A. DURABILITY: 500 CYCLES MIN.
   B. TEMPERATURE RANGE: -65°C TO +165°C

4. PACKAGING:
   A. QUANTITY: SINGLE PACK
   B. MARKING: BAG TO BE MARKED
      "AMPHENOL RF, 901-10734 & DATE CODE"

5. CABLE ASSEMBLY INSTRUCTIONS:
   A. TRIM CABLE AS SHOWN.
   B. SLIDE FERRULE & INSULATOR DISC ONTO CABLE.
   C. SOLDER CABLE CENTER CONDUCTOR TO CONTACT.
   D. INSERT CABLE, UNTIL IT BOTTOMS, WITH FOIL ENTERING CONNECTOR
      AND BRAID OVER KNURL.
   E. CRIMP FERRULE OVER BRAID WITH .178" HEX DIE.

6 SHOWS CABLE ENTRY DIMENSIONS.

REVISIONS				
REV	DESCRIPTION	DATE	ECN	APPR
A	RELEASE TO MFG.	9-APR-21	15641	SH

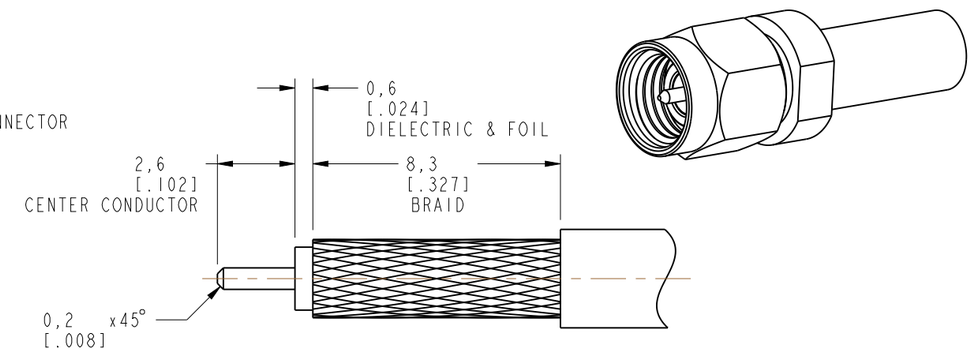

RECOMMENDED CABLE STRIPPING DIMENSIONS

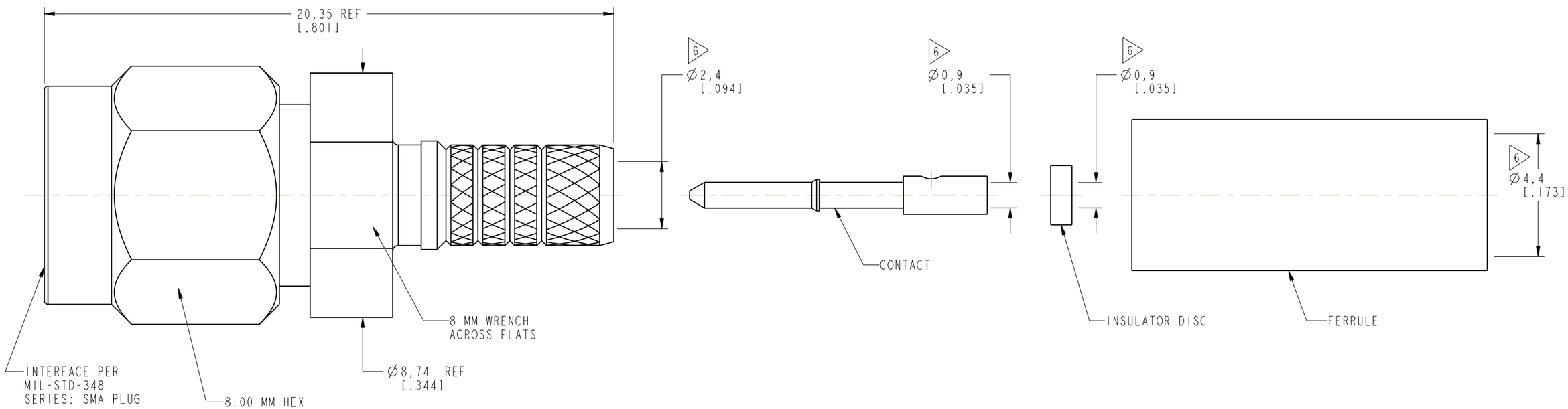

CUSTOMER OUTLINE DRAWING

ALL OTHER SHEETS ARE FOR INTERNAL USE ONLY

NOTICE: These drawings, specifications, or other data (1) are, and remain the property of Amphenol corp. (2) must be returned upon request; and (3) are confidential and not to be disclosed to any person other than those to whom they are given by Amphenol Corp. The furnishing of these drawings, specifications, or other data by Amphenol Corp., or to any other person to anyone for any purpose is not to be regarded by implication or otherwise in any manner licensing, granting rights to permitting such holder or any other person to manufacture, use or sell any product, process or design, patented or otherwise, that may in any way be related to or disclosed by said drawings, specifications, or other data.

THIRD ANGLE PROJ.

REFERENCE 901-10681

EAR# 9772

UNLESS OTHERWISE SPECIFIED
DIMENSIONS ARE METRIC [INCHES] AND TOLERANCES ARE:
<0.5mm = ±0.05mm [<0.020 = ±0.002]
>0.5 - 6mm = ±0.1mm [>0.020 - 0.236 = ±0.004]
>6.00 - 30mm = ±0.2mm [>0.236 - 1.181 = ±0.008]
>30.00 - 120mm = ±0.3mm [>1.181 - 4.725 = ±0.012]
ANGLES = ±1°

MATERIAL: SEE NOTES

ENGINEER: E.WU

DATE: 25-MAR-21

TITLE: SMA PLUG
C30 CABLE GROUP
RTK-031, TFC 3.3mm

SHEET NO. 2 OF 2

SCALE: 7.0:1.0

Amphenol RF

SIZE: B

DRAWING NO. 901-10734

ITEM NO. 901-10734

PART NO. 901-10734

REV: A