74680

CUSTOMER: CISCO

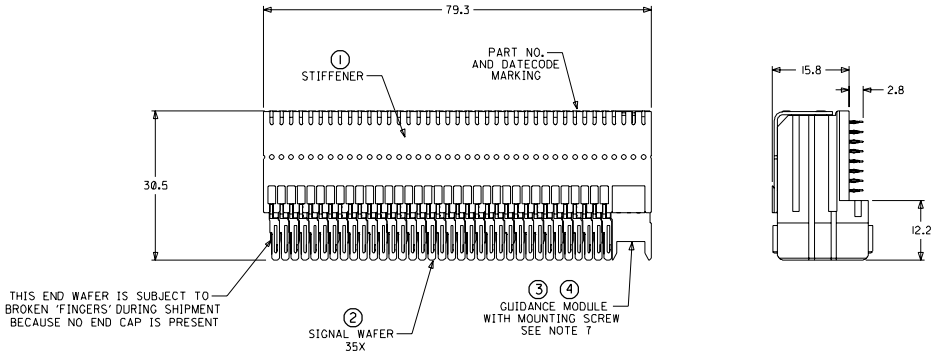

NOTES: (UNLESS OTHERWISE SPECIFIED)

1. MATERIALS: HOUSING - LIQUID CRYSTAL POLYMER (LCP), GLASS-FILLED, UL94V-0, BLACK.
   TERMINALS - HIGH PERFORMANCE COPPER ALLOY.
   STIFFENER - STAINLESS STEEL.
2. FINISH: SELECTIVE GOLD (Au) IN CONTACT AREA, 0.00076mm MINIMUM THICKNESS; SELECTIVE TIN/LEAD (Sn/Pb) ON PCB TAILS, NICKEL (Ni) OVERALL.
3. REFER TO MOLEX PRODUCT SPECIFICATION PS-74031-999 FOR PERFORMANCE SPECIFICATIONS.
4. REFER TO MOLEX DOCUMENT SD-74681-002 FOR ADDITIONAL DETAIL ON THE HSD SIGNAL WAFER.
5. REFER TO MOLEX DOCUMENT SD-74037-006 FOR ADDITIONAL DETAIL ON THE GUIDANCE MODULE.
6. MOUNTING SCREWS WILL BE BAGGED WITH EACH CONNECTOR.
7. PARTS ARE PACKAGED IN TUBES PER PK-70873-5041.

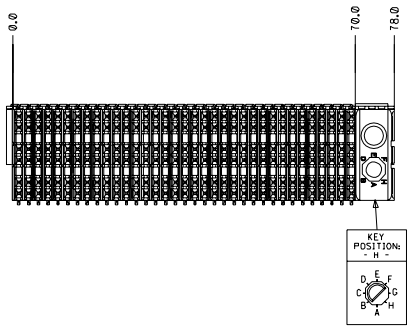

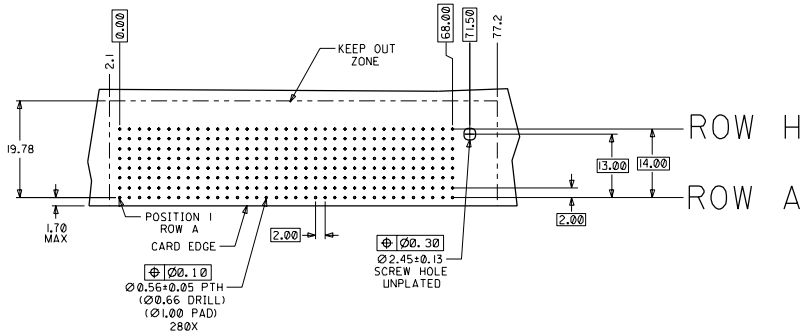

DAUGHTERCARD HOLE PATTERN
(CONNECTOR SIDE)

ITEM	PART NUMBER	DESCRIPTION	QTY
1	74046-0079	STIFFENER	1
2	74681-0001	HSD8 WAFER	35
3	74037-8008	POLARIZING/GUIDE MODULE	1
4	73726-0000	GUIDE MODULE MNTG SCREW	1

CISCO PART NUMBER: 29-4000-01

CHANGED DIM. EC NO. UDT2002-0639 DRWN: ATP 01/10/22 CH'K: LAURX 01/10/22 APPR: BIXLER 01/10/22 DESCRIPTION

B REV

QUALITY SYMBOLS: MAJOR = 0; CRITICAL = 0

GENERAL TOLERANCES: (UNLESS SPECIFIED)

	mm	INCH
4 PLACES	±0. --	±. --
3 PLACES	±0. --	±. --
2 PLACES	±0. --	±. --
1 PLACE	±0. --	±. --
ANGULAR: ± 2°		

DRAFT WHERE APPLICABLE MUST REMAIN WITHIN DIMENSIONS

SCALE 2:1 | DESIGN UNITS ☒mm ☐INCH | THIRD ANGLE PROJECTION | DIMENSIONS: ☐mm/INCH ☐INCH/mm ☒mm ONLY | SHT | REV | REVISE ON CAD ONLY

DRAWN BY & DATE: ATP 01/09/14
CHECKED BY & DATE: LAURX 01/09/14
APPROVED BY & DATE: BIXLER 01/09/14

TITLE: 8 ROW HSD DAUGHTERCARD ASSEMBLY SALES DRAWING

MOLEX INCORPORATED

CAD FILENAME: SD-74680-053 | MATERIAL NO. 746800053 | DRAWING NO. SD-74680-053 | SHEET NO. 1 OF 1

THIS DRAWING CONTAINS INFORMATION THAT IS PROPRIETARY TO MOLEX INCORPORATED AND SHOULD NOT BE USED WITHOUT WRITTEN PERMISSION.

SIZE D