THIS DRAWING IS UNPUBLISHED. RELEASED FOR PUBLICATION -,- .
© COPYRIGHT - BY TYCO ELECTRONICS CORPORATION. ALL INTERNATIONAL RIGHTS RESERVED.

PART NUMBER	REV	FIRST USED
680734-1	B	122500-1
680734-2	B	565435-5
680734-3	B	354500-1

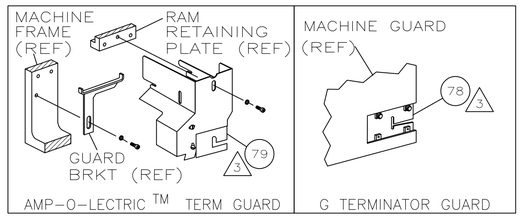

TERMINAL NAME: SOCKET & PIN

PIN	SOCKET
286768	286770

AMP P/N	MFG P/N
286768-1	SN16N1TK6
286768-2	SM16M1TK6
286770-1	SC16N1TK6
286770-2	SC16M1TK6

CRIMP DATA (NON-AMP TERMINAL-AMP SPEC)

PAD LTR	CRIMP HEIGHT	WIRE SIZE
A	.054 ±.002 [1.37 ±0.05mm]	18
B	.058 ±.002 [1.47 ±0.05mm]	16
C	NOT	USED
D	NOT	USED

CRIMP	SIZE	TYPE	RANGE
WIRE	.090 [2.29mm]	F	16-18
INSUL	-	-	-

WIRE STRIP LENGTH	TERM APPL SPEC	FEED	APPL INSTRUCTION	SET UP GAGE	LAYOUT
.203-.234	NONE	.350	408-8040	458637-1	L2159

LOC	DIST
A	66

REVISIONS

P	LTR	DESCRIPTION	DATE	DWN	APVD
	B	ECR-08-012691	5-2008	MY	GB

-1	LEADMAKER	MECH POST FEED
-2	BENCH MODEL K	MECH PRE FEED
-3	BENCH MODEL G	MECH PRE FEED

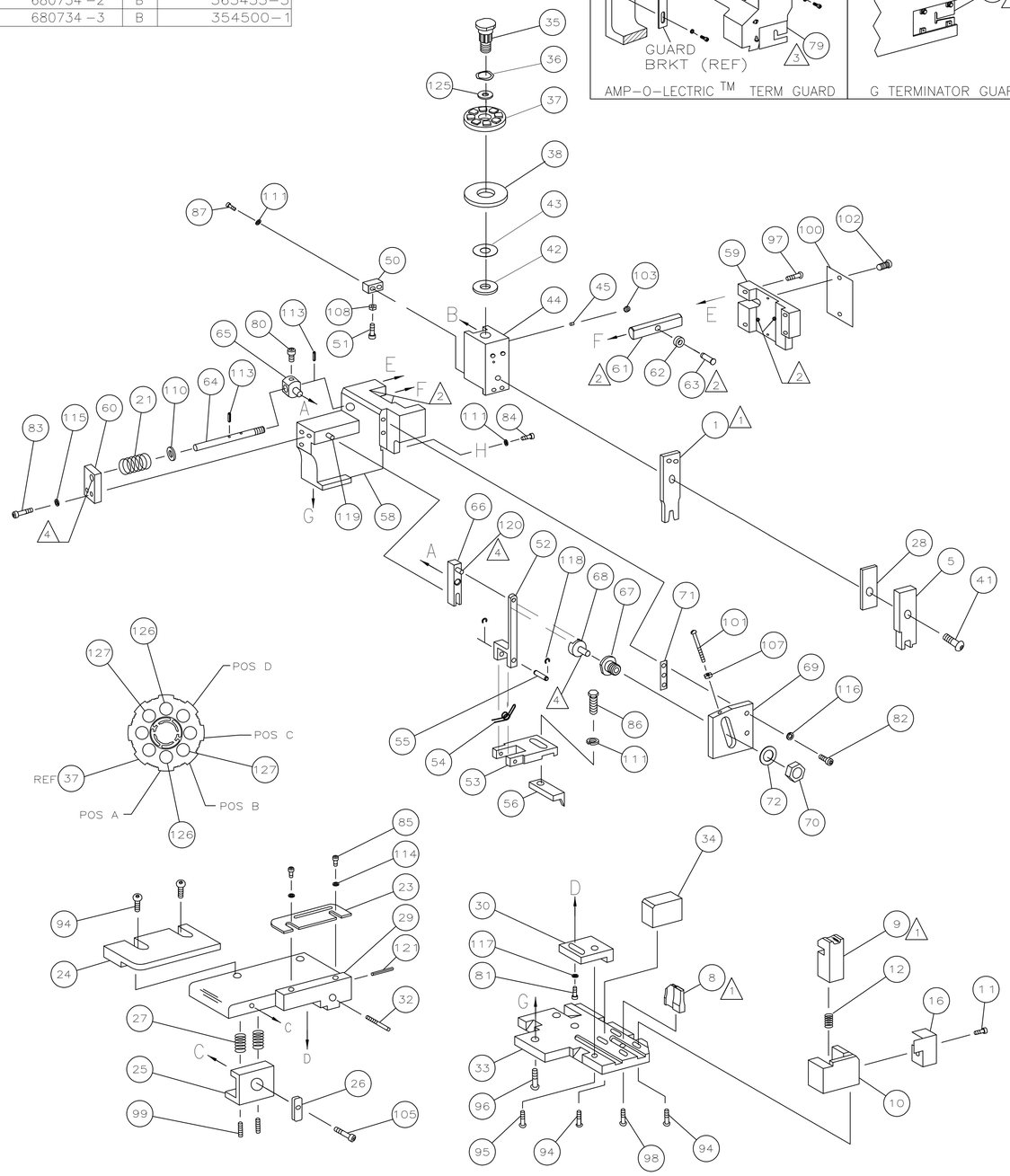

-3	-2	-1	U/M	PART NO	DESCRIPTION	ITEM NO
						129
						128
2	2	2	-	1-354779-4	PIN, WIRE DISC (.3060)B	127
2	2	2	-	2-354779-3	PIN, WIRE DISC (.3105)A	126
1	1	1	-	986950-1	WASHER, FLAT PRECISION	125
1	1	1	-	217238-1	GENERAL INSTRUCTION PACKAGE	124
1	1	1	-	4088040	SF APPL INST 408-8040	123
						122
1	1	1	-	4-21028-0	PIN,SLT SPR(Ø.093x.75)ST GDE PL	121
REF	REF	REF	-	1-21030-1	PIN,DOWEL(Ø.187x.50)LEVER	120
REF	REF	REF	-	1-21030-6	PIN,DOWEL(Ø.187x1.25)HOUSING	119
REF	REF	REF	-	21045-3	RING,RET "C"(Ø.187)FD FING PIN	118
1	1	1	-	21024-5	WASHER, LOCK(#10)ADJ BLOCK	117
REF	REF	REF	-	21024-5	WASHER,LOCK(#10)ADJ PLATE	116
REF	REF	REF	-	21024-5	WASHER,LOCK(#10)FEED GDE ROD	115
2	2	2	-	21024-2	WASHER,LOCK(#4)FRONT STP GUIDE	114
REF	REF	REF	-	5-21028-1	PIN,SLT SPR(Ø.125x.50)ADJ ROD	113
						112
4	4	4	-	21024-4	WASHER,LOCK(#8)STRIPPER	111
REF	REF	REF	-	21899-4	WASHER,FLAT(Ø5/16)SCREW ADJ	110
						109
REF	REF	REF	-	21018-5	NUT,HEX(NO. 6)HOLDDOWN	108
1	1	1	-	21068-5	NUT,HEX(6-32)FEED ADJ	107
						106
1	1	1	-	22353-8	SCR,SHLD(Ø.187x.25)DRAG LEVER	105
						104
1	1	1	-	21009-2	SCR,SKT SET(1/4-20x.25 LW)RAM	103
2	2	2	-	21017-2	SCR,DRIVE(#2x.19)ID PLATE	102
REF	REF	REF	-	6-23715-5	SCR,PAN HD(6-32x1.50)FEED ADJ	101
1	1	1	-	461264-1	PLATE, IDENTIFICATION	100
2	2	2	-	5-21006-6	SCR,SET(10-32x.75)DRAG	99
1	1	1	-	22733-8	SCR,BHC(8-32x.38 LW)ANVIL	98
REF	REF	REF	-	2-21002-9	SCR,BHC(10-32x.75)CAP	97
REF	REF	REF	-	2-22733-8	SCR,BHC(1/4-20x.62)HOUSING	96
REF	REF	REF	-	2-21002-7	SCR,BHC(10-32x.50)SG ADJ BLOCK	95
4	4	4	-	2-21002-2	SCR,BHC(8-32x.50)TERM H DWN	94
						93
						92
1	1	1	-	1-21002-7	SCR,BHC(6-32x.38)CAM	91
						90
						89
						88
2	2	2	-	2-21002-7	SCR,BHC(8-32x.50)TERM H DWN	87
1	1	1	-	2-22603-0	SCR,HEX HD(8-32x.31)FEED FINGER	86
2	2	2	-	1-21000-3	SCR,SHC(4-40x.25)F ST GUIDE	85
1	1	1	-	2-21000-7	SCR,SHC(8-32x.50)STRIPPER	84
REF	REF	REF	-	3-21000-7	SCR,SHC(10-32x.75)FEED ROD GD	83
REF	REF	REF	-	3-21000-6	SCR,SHC(10-32x.62)FD ADJ BLK	82
1	1	1	-	3-21000-4	SCR,SHC(10-32x.38)SG ADJ BL	81
REF	REF	REF	-	3-21000-4	SCR,SHC(10-32x.38)PIVOT BLK	80
-	REF	-	-	455749-1	GUARD, WINDOW	79
REF	-	-	-	679532-1	INSERT, GUARD	78
						77
						76
						75
						74
						73
REF	REF	REF	-	458109-1	WASHER, SPECIAL	72
REF	REF	REF	-	690517-1	SPACER	71

QTY REQD PER ASSY — PARTS LIST

-3	-2	-1	U/M	PART NO	DESCRIPTION	ITEM NO
REF	REF	REF	-	22594-8	NUT,HEX(1/2-20)	70
REF	REF	REF	-	240628-1	PLATE, ADJUSTMENT	69
REF	REF	REF	-	240626-1	SHAFT, PIVOT	68
REF	REF	REF	-	240633-1	BUSHING	67
REF	REF	REF	-	455680-1	LEVER, INTERMEDIATE	66
REF	REF	REF	-	240629-1	BLOCK, PIVOT	65
REF	REF	REF	-	240632-2	SCREW, ADJ FEED ROD	64
REF	REF	REF	-	240659-3	PIN, CAM ROLLER	63
REF	REF	REF	-	240658-1	ROLLER, CAM	62
REF	REF	REF	-	454398-2	ROD, FEED	61
REF	REF	REF	-	454178-1	GUIDE, FEED ROD	60
REF	REF	REF	-	454220-1	CAP, RAM	59
REF	REF	REF	-	454485-1	HOUSING	58
						57
1	1	1	-	458537-2	PAWL, FEED	56
REF	REF	REF	-	240624-1	PIN, FEED FINGER	55
REF	REF	REF	-	691499-1	SPRING, FEED FINGER	54
REF	REF	REF	-	690541-1	HOLDER, FEED FINGER	53
REF	REF	REF	-	455679-1	LEVER, TERMINAL FEED ARM	52
1	1	1	-	811242-2	BUMPER, HOLDDOWN	51
1	1	1	-	690753-1	SPACER, TONKER	50
1	-	-	-	690602-6	CAM, PRE-FEED 1 5/8 ST	49
-	1	-	-	690602-5	CAM, PRE-FEED 1 1/8 ST	48
-	-	1	-	690501-4	CAM, POST-FEED 1 5/8 ST	47
1	1	1	-	459456-1	APPLICATOR, BASIC (SUBASSY)	46
1	1	1	-	690191-1	PLUG, NYLON	45
1	1	1	-	455673-1	RAM	44
1	1	1	-	690125-1	WASHER, LAMINATED	43
1	1	1	-	690124-1	WASHER, RAM	42
1	1	1	-	7-21002-9	BOLT, CRIMPER(5/16x1.00)	41
						40
						39
1	1	1	-	690223-2	SPACER, INSULATION DISC	38
1	1	1	-	354777-1	WIRE DISC, PLASTIC	37
1	1	1	-	22480-5	WASHER, SPRING	36
1	1	1	-	690212-1	POST, RAM	35
1	1	1	-	690786-9	SUPPORT, TERMINAL	34
REF	REF	REF	-	455675-1	PLATE, BASE	33
1	1	1	-	690432-3	SCREW, ADJUSTMENT	32
						31
REF	REF	REF	-	455689-1	BLOCK, STRIP GUIDE ADJ	30
1	1	1	-	3-458144-0	PLATE, STRIP GUIDE	29
1	1	1	-	2-455888-2	SPACER, FRONT SHEAR DEP	28
2	2	2	-	1-22284-0	SPRING, DRAG	27
1	1	1	-	356835-1	LEVER, DRAG RELEASE	26
1	1	1	-	240792-1	DRAG, TERMINAL	25
1	1	1	-	6-690504-0	GUIDE, STRIP (REAR)	24
1	1	1	-	690438-1	GUIDE, STRIP (FRONT)	23
-	-	1	-	690472-2	STRIPPER	22
REF	REF	REF	-	4-22284-9	SPRING, FEED RETURN	21
						20
1	1	-	-	691353-1	STRIPPER	19
						18
						17
1	1	1	-	318563-1	GUARD, CHIP, FRONT	16
						15
						14
						13
1	1	1	-	3-22280-3	SPRING, SHEAR	12
1	1	1	-	690461-1	STOP, SHEAR	11
1	1	1	-	690459-1	HOLDER, SHEAR (FRONT)	10
1	1	1	-	1-454276-9	SHEAR, FLOAT (FRONT)	9
1	1	1	-	2-904132-8	ANVIL	8
						7
						6
1	1	1	-	1-455889-4	DEPRESSOR, SHEAR (FRONT)	5
						4
						3
						2
1	1	1	-	5-456406-4	CRIMPER, WIRE	1

QTY REQD PER ASSY — PARTS LIST

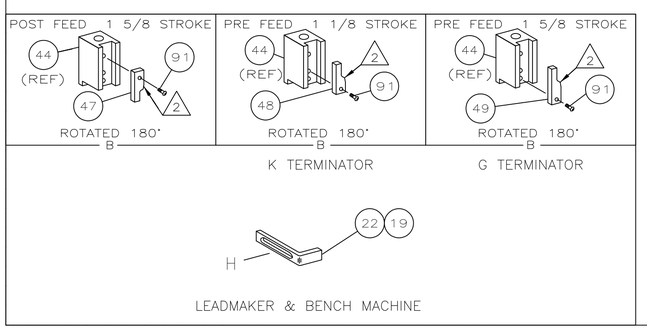

1. RECOMMENDED SPARE PARTS.
2. GREASE LIGHTLY.
3. GUARD MUST BE IN PLACE WHEN OPERATING APPLICATOR IN A BENCH MACHINE.
4. LUBRICATE DAILY USING NO. 20 MACHINE OIL.
5. ITEMS WITH QTY OF REF SPECIFIED (EXCEPT ITEMS 78 AND 79) ARE USED ON ITEM 46.
6. CUT TO LENGTH AT ASSY.

THIS DRAWING IS A CONTROLLED DOCUMENT.

DIMENSIONS: INCHES

TOLERANCES UNLESS OTHERWISE SPECIFIED:
0 PLC ± -
1 PLC ± -
2 PLC ± -
3 PLC ± -
4 PLC ± -
ANGLES ± -

MATERIAL -
FINISH -

DWN W.HOOVER 220CT98
CHK C.ERISMAN 220CT98
APVD T.ELBIN 220CT98
PRODUCT SPEC —
APPLICATION SPEC —
WEIGHT F

Tyco Electronics
Tyco Electronics Corporation
Harrisburg, PA 17105-3608

NAME SIDE FEED HDM APPLICATOR
—
—

SIZE	CAGE CODE	DRAWING NO	RESTRICTED TO
A1	00779	C-680734	—

CUSTOMER DRAWING | SCALE - | SHEET 1 OF 1 | REV B

4805 (1/08)

22MAY2008 9:41am