© – TE Connectivity. All Rights Reserved.

REVISIONS					
P	LTR	DESCRIPTION	DATE	DWN	APVD
	AE8	REVISED AS PER ECR-23-175536	17MAY2023	JK	WH

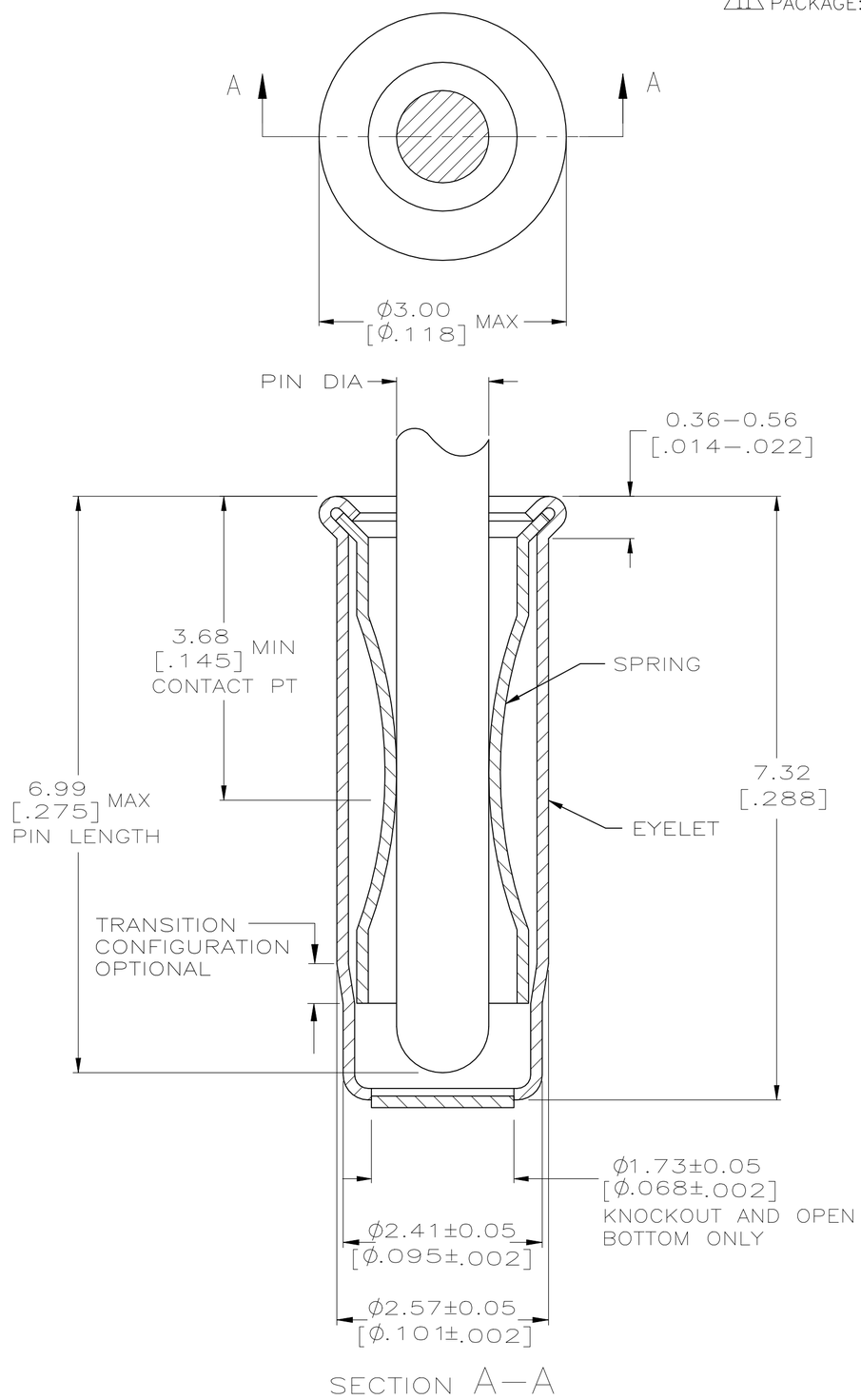

SECTION A–A

11 PACKAGE: TAPE AND REEL.

1. TIN PER MIL–T–10727 OR TIN LEAD .0.00254 [.000100] MIN THK.
2. GOLD PER MIL–G–45204, TYPE II, 0.00076 [.000030] MIN THK OVER NICKEL PER QQ–N–290 0.00028 [.000011] MIN THK ON CONTACT AREA.
3. GOLD FLASH PER MIL–G–45204, TYPE II, 0.13μm [.000005] MIN THK. OVER NICKEL PLATE PER QQ–N–290 0.51μm–1.52μm [.000020–.000060] EXT THK.
4. RECOMMENDED HOLE SIZE, PLATED OR UNPLATED:
   MACHINE INSERTION: 2.56±0.08 [.101±.003]
   HAND INSERTION: $2.62^{+0.10}_{-0.00}$ $\left[.103^{+.004}_{-.000}\right]$
5. APPLICATION TOOL PART NUMBER:
   MACHINE NO. 682127–6
   INSERTION HEAD NO. 682039–5
6. TO INSURE PROPER SPRING TENSION DO NOT EXCEED A 0.05 [.002] DIFFERENCE IN PIN DIA WHEN CHANGING TO A SMALLER PIN.
7. BOTTOM PLUG KNOCKOUT TOOL PART NUMBER 69729 WITH TIP PART NUMBER 69728–3.
8. TIN PER ASTM B 545, 0.00254[.000100] MIN THK.
9. MATERIAL: SPRING: BERYLLIUM COPPER, QQ–C–533.
   EYELET: COPPER, QQ–C–576.
10. PACKAGE: MAYLAR STRIP.

	BOTTOM TYPE	RECOMMENDED PIN DIA 6	EYELET FINISH	SPRING FINISH	PART NO
	11 CLOSED	1.27–1.45 [.050–.057]	GOLD 3	GOLD 2	3–50871–2
	10 CLOSED	1.27–1.45 [.050–.057]	GOLD 3	GOLD 2	7–50871–3
	CLOSED	1.07–1.24 [.042–.049]	TIN 8	TIN 8	6–50871–8
	CLOSED	1.07–1.24 [.042–.049]	TIN 8	TIN 1	3–50871–0
SUPSD BY 1–50871–4	CLOSED	1.27–1.45 [.050–.057]	TIN 1	GOLD 2	2–50871–8
SUPSD BY 50871–5	CLOSED	1.07–1.24 [.042–.049]	TIN 1	GOLD 2	2–50871–7
OBSOLETE	CLOSED	1.42–1.65 [.056–.065]	TIN 1	TIN 1	2–50871–6
	KNOCKOUT	1.42–1.65 [.056–.065]	TIN 1	TIN 1	2–50871–5
OBSOLETE	OPEN	1.42–1.65 [.056–.065]	TIN 1	TIN 1	2–50871–4
OBSOLETE	CLOSED	1.42–1.65 [.056–.065]	GOLD 3	GOLD 2	2–50871–3
		1.42–1.65 [.056–.065]	GOLD 3	GOLD 2	2–50871–2
OBSOLETE	KNOCKOUT	1.42–1.65 [.056–.065]	TIN 1	GOLD 2	2–50871–1
	OPEN	1.42–1.65 [.056–.065]	TIN 1	GOLD 2	1–50871–9
		1.42–1.65 [.056–.065]	GOLD 3	GOLD 2	1–50871–8
OBSOLETE	CLOSED	1.27–1.45 [.050–.057]	TIN 1	TIN 1	1–50871–7
OBSOLETE	CLOSED	1.27–1.45 [.050–.057]	TIN 1	GOLD 2	1–50871–4
		1.27–1.45 [.050–.057]	GOLD 3	GOLD 2	1–50871–3
	OPEN	1.27–1.45 [.050–.057]	TIN 1	GOLD 2	1–50871–0
	CLOSED	1.07–1.24 [.042–.049]	TIN 1	TIN 1	50871–8
	OPEN	1.07–1.24 [.042–.049]	TIN 1	TIN 1	50871–6
OBSOLETE	CLOSED	1.07–1.24 [.042–.049]	GOLD 3	GOLD 2	50871–5
		1.07–1.24 [.042–.049]	GOLD 3	GOLD 2	50871–4
	KNOCKOUT	1.07–1.24 [.042–.049]	TIN 1	GOLD 2	50871–3
	OPEN	1.07–1.24 [.042–.049]	TIN 1	GOLD 2	50871–1
OBSOLETE		1.07–1.24 [.042–.049]	GOLD 3	GOLD 2	50871

50871

THIS DRAWING IS A CONTROLLED DOCUMENT.

DIMENSIONS: mm [INCHES]

TOLERANCES UNLESS OTHERWISE SPECIFIED:
0 PLC ± –
1 PLC ± –
2 PLC ± 0.20 [.008]
3 PLC ± –
4 PLC ± –
ANGLES ± –

MATERIAL 9

FINISH

DWN R. TALLEY 20SEP05
CHK R. MILLER 8–22–91
APVD – —
PRODUCT SPEC —
APPLICATION SPEC —
WEIGHT 0.000000
CUSTOMER DRAWING

TE Connectivity

NAME MINIATURE SPRING SOCKET ASSEMBLY SERIES 5 –

SIZE	CAGE CODE	DRAWING NO	RESTRICTED TO
A2	00779	C–50871	—

SCALE	SHEET	REV
20:1	1 OF 1	AE8

1471–9 (1/15)