THE INFORMATION CONTAINED IN THIS DRAWING IS THE SOLE PROPERTY OF AMPHENOL CABLES ON DEMAND. ANY REPRODUCTION OR DISCLOSURE, TO THIRD PARTIES, IN PART OR WHOLE, WITHOUT THE EXPRESS WRITTEN PERMISSION OF AMPHENOL CABLES ON DEMAND IS PROHIBITED.

REVISIONS

REV.	DESCRIPTION	DATE	APPROVED
A	NEW RELEASE	18/JAN/2007	
A1	Add wiring color	16/JAN/2012	

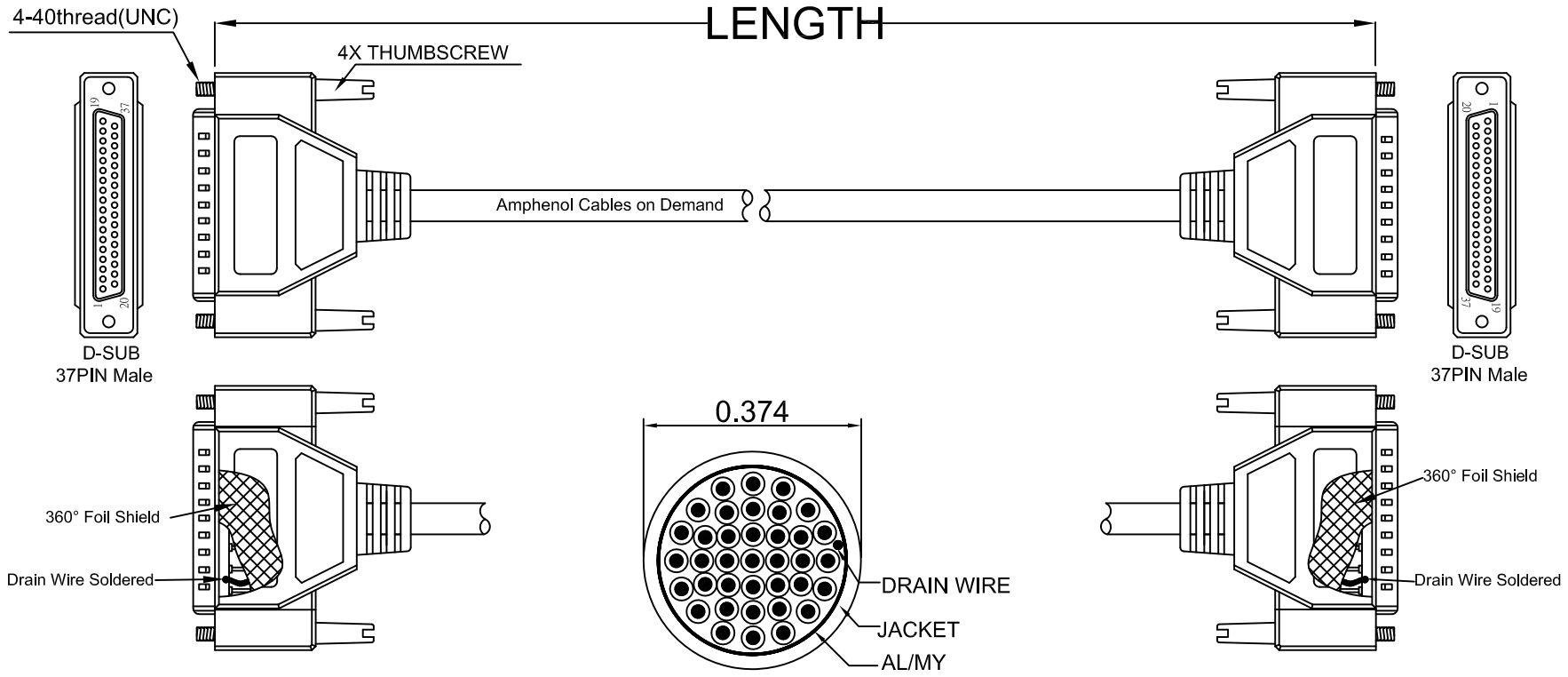

SEC A-A

PIN OUT: 1 TO 1

Male	Male	Color
PIN1	PIN1	Black
PIN2	PIN2	Brown
PIN3	PIN3	Red
PIN4	PIN4	Orange
PIN5	PIN5	Yellow
PIN6	PIN6	Green
PIN7	PIN7	Blue
PIN8	PIN8	Purple
PIN9	PIN9	Gray
PIN10	PIN10	Whie
PIN11	PIN11	Pink
PIN12	PIN12	Light Green
PIN13	PIN13	Black/White
PIN14	PIN14	Brown/White
PIN15	PIN15	Red/White
PIN16	PIN16	Orange/White
PIN17	PIN17	Green/White
PIN18	PIN18	Blue/White
PIN19	PIN19	Purple/White

Male	Male	Color
PIN20	PIN20	Red/Black
PIN21	PIN21	Orange/Black
PIN22	PIN22	Yellow/Black
PIN23	PIN23	Green/Black
PIN24	PIN24	Gray/Black
PIN25	PIN25	Pink/Black
PIN26	PIN26	Pink/Red
PIN27	PIN27	Pink/Blue
PIN28	PIN28	Pink/Green
PIN29	PIN29	Light Blue
PIN30	PIN30	Light Blue/Black
PIN31	PIN31	Light Blue/Red
PIN32	PIN32	Light Blue/Blue
PIN33	PIN33	Light Blue/Green
PIN34	PIN34	Grey/Red
PIN35	PIN35	Grey/Green
PIN36	PIN36	Purple/Black
PIN37	PIN37	Blue/Black
SHIELD	SHIELD	Drain Wire

LENGTH & P/N Table

LENGTH	P/N	Cable Color
2.5FT ±1 inch	CS-DSSMDB37MM-002.5	GREY
5FT ±2 inch	CS-DSSMDB37MM-005	GREY
10FT ±3 inch	CS-DSSMDB37MM-010	GREY
25FT ±4 inch	CS-DSSMDB37MM-025	GREY

NOTES: UNLESS OTHERWISE SPECIFIED

UNLESS OTHERWISE SPECIFIED DIMENSIONS ARE IN INCHES TOLERANCES ARE:

DECIMALS		ANGLES
.X	±.X	± X°
.XX	±.XX	
.XXX	±.XXX	

THIRD ANGLE PROJECTION

EAR NO.

APPROVALS		DATE
DRAWN	LF	16/JAN/2012
CHECKED	BA	16/JAN/2012
RESP ENG		
MFG ENG		

Amphenol Cables on Demand
20 VALLEY ST. ENDICOTT, NY 13760

ASM CBL Economy 37PIN D-Sub MM

SIZE A | DWG. NO. CS-DSSMDB37MM-XXX | REV. A1

CAD FILE: | SCALE | SHEET OF