PART NO.	A79100–001	REV	ECO	DATE	APP
		C	96268	10–22–09	TLM

MATERIALS & SPECIFICATIONS

INSULATOR MATERIAL:
THERMOPLASTIC POLYMER PER MIL–DTL–32139

CONTACT MATERIAL:
COPPER ALLOY PER MIL–DTL–32139. GOLD PLATED PER ASTM B488, (HARD GOLD) TYPE II CODE C CLASS 1.27

TERMINATION:
32 AWG (7–40) TYPE ET, PER NEMA HP3, COLOR CODED PER TABLE

CURRENT CAPACITY:
1 AMP MAX PER MIL–DTL–32139

CONTACT RESISTANCE:
71 MILLIOHMS (71 mV) MAX @ 1.0 AMPS PER MIL–DTL–32139

ACTUAL SIZE
EXCLUDING WIRE LENGTH

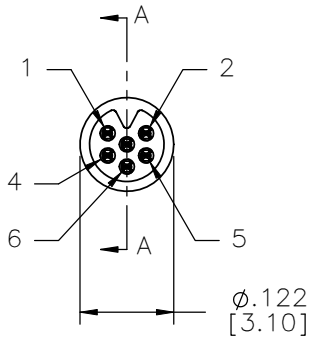

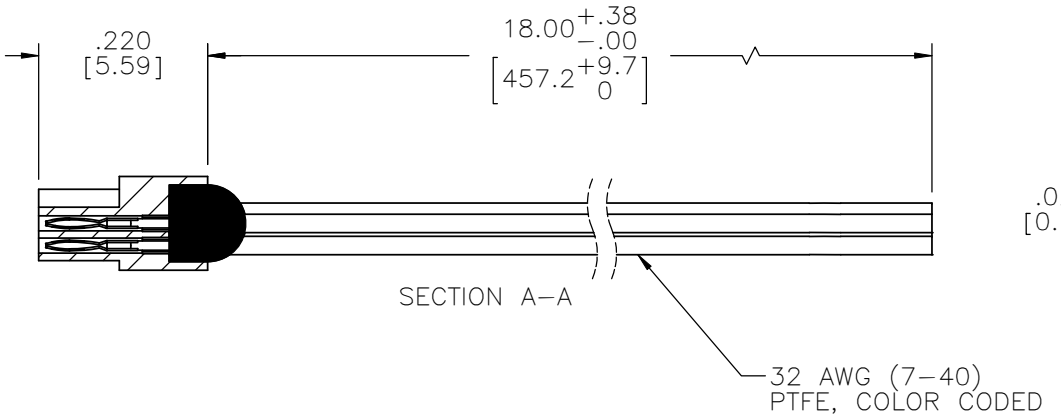

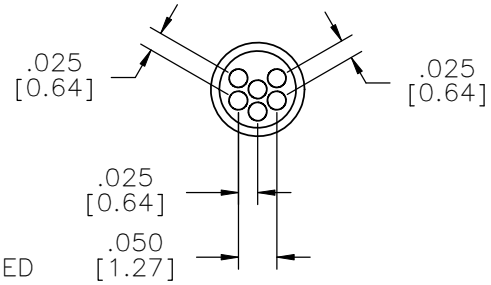

LOADING VIEW
LESS EPOXY

PIN #	COLOR
1	BLACK
2	BROWN
3	RED
4	ORANGE
5	YELLOW
6	GREEN

INTERNAL USE ONLY

USE MFG. LOADING
PROCEDURE NC–6P

NCP / SLDW	THIRD ANGLE –TOLERANCES– UNLESS OTHERWISE NOTED DIMENSIONS IN INCHES 2 PL DEC ± .01 3 PL DEC ± .005 4 PL DEC ± .0005 ANGLES ± 1°	THIS DRAWING CONTAINS CONFIDENTIAL AND PROPRIETARY INFORMATION WHICH IS THE PROPERTY OF OMNETICS CONNECTOR CORP. THIS DOCUMENT MAY NOT, IN WHOLE OR IN PART, BE DUPLICATED, OR DISCLOSED FOR ANY PURPOSE, WITHOUT WRITTEN PERMISSION FROM OMNETICS CONNECTOR CORP.		
		DFTM. TLM	DATE 01–14–09	TITLE: (6) PIN MALE NANO CIRCULAR CONNECTOR
		CHK'D.	DATE	
		APP'D.	DATE	

OMNETICS CONNECTOR CORPORATION
7260 COMMERCE CIRCLE EAST
MINNEAPOLIS, MN 55432
WWW.OMNETICS.COM

CAGE CODE 61873
DWG NO. A79100–001
SHEET 1 OF 1
SCALE: 4:1
REV C