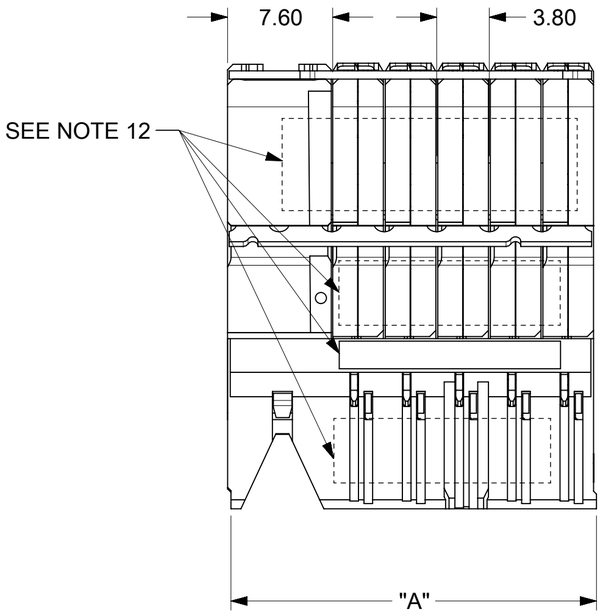


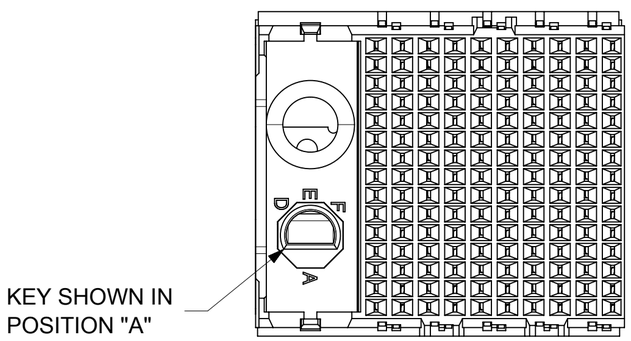


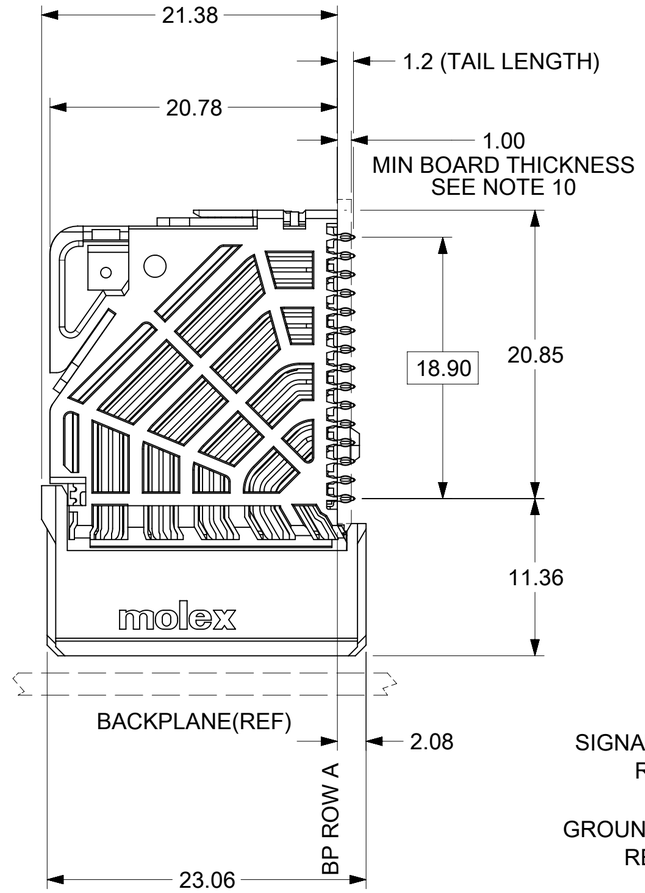


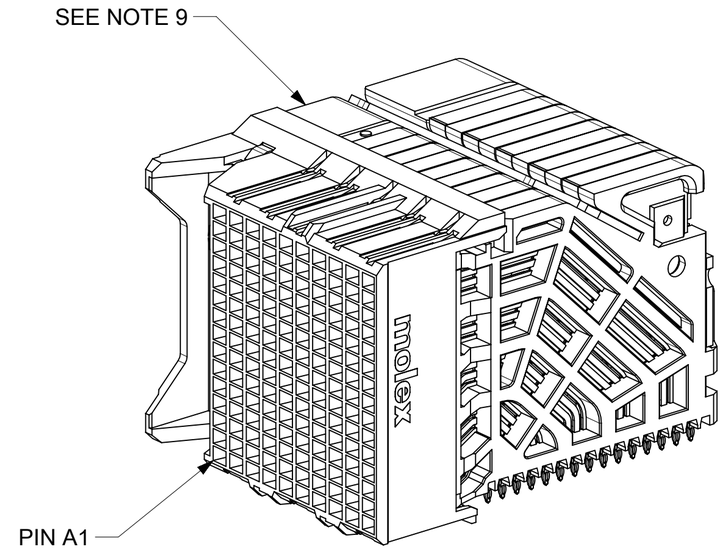


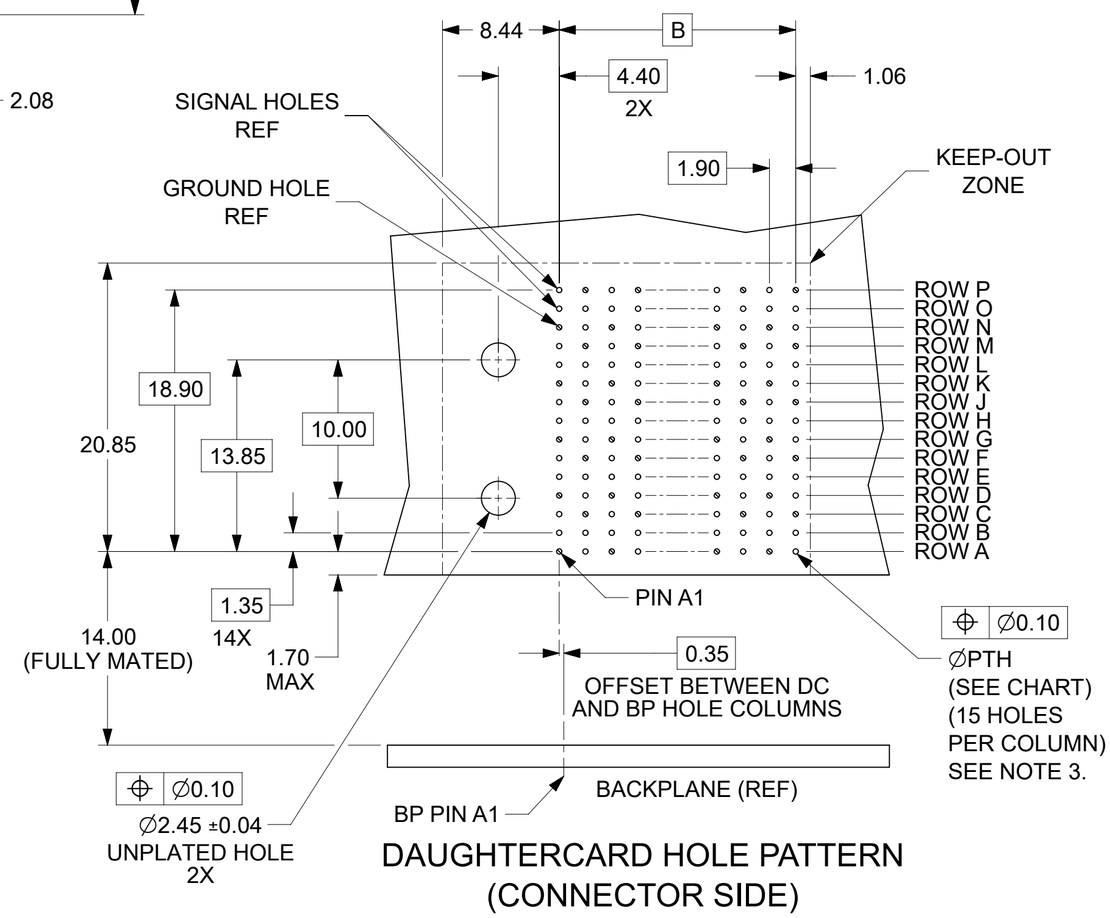


DAUGHTERCARD HOLE PATTERN
(CONNECTOR SIDE)

NOTES:

1. MATERIALS: HOUSING - LIQUID CRYSTAL POLYMER (LCP), GLASS-FILLED, UL94V-0
   TERMINALS - HIGH PERFORMANCE COPPER ALLOY
2. FINISH: 30µIN MIN SELECTIVE GOLD IN CONTACT AREA, SELECTIVE TIN ON PCB TAILS. NICKEL OVERALL.
3. REFER TO MOLEX PRODUCT SPEC PS-76060-999 FOR PERFORMANCE SPECIFICATIONS AND ADDITIONAL PCB INFORMATION.
4. EACH SIGNAL WAFER CONTAINS 2 COLUMNS OF TERMINALS.
5. PRODUCT IS PACKAGED PER PK-70873-611.
6. THIS PART CONFORMS TO CLASS B REQUIREMENTS OF COSMETIC SPEC PS-45499-002.
7. REFER TO MOLEX SALES DRAWING SD-76055-002 FOR THE MATING HEADERS.
8. REFER TO MOLEX PCB MOUNTING GUIDE AS-76060-990 FOR ANTIPAD AND ROUTING RECOMMENDATIONS.
9. PART NUMBER 76060-3120 SHOWN ON DRAWING. KEYING FEATURES WILL CHANGE WITH COLUMN SIZE.
10. MINIMUM BOARD THICKNESS IS 1.00 mm FOR COMPLIANT PIN FUNCTIONALITY.
11. WHEN USING MOLEX SUPPLIED #2-32 SCREW 73726-0000 (9.50mm ±0.38 THREADABLE SCREW LENGTH), THE MAXIMUM BOARD THICKNESS IS 4.4mm.
12. MARKING: LOCATED APPROXIMATELY AS SHOWN. PART NUMBER AND DATE CODE.

THIS DRAWING CONTAINS INFORMATION THAT IS PROPRIETARY TO MOLEX ELECTRONIC TECHNOLOGIES, LLC AND SHOULD NOT BE USED WITHOUT WRITTEN PERMISSION

| DIMENSION UNITS | SCALE |
|---|---|
| mm | NTS |

GENERAL TOLERANCES (UNLESS SPECIFIED)

| | | |
|---|---|---|
| ANGULAR TOL | ± | 0.5 ° |
| 4 PLACES | ± | |
| 3 PLACES | ± | |
| 2 PLACES | ± | 0.13 |
| 1 PLACE | ± | 0.25 |
| 0 PLACES | ± | |

DRAFT WHERE APPLICABLE MUST REMAIN WITHIN DIMENSIONS

CURRENT REV DESC: REMASTERED TO NX

| | | |
|---|---|---|
| EC NO: | 705090 | |
| DRWN: | SKANDB | 2021/09/27 |
| CHK'D: | VINODM3 | 2022/02/17 |
| APPR: | LZENG | 2022/05/13 |

INITIAL REVISION:

| | | |
|---|---|---|
| DRWN: | MCARRANZA | 2007/07/11 |
| APPR: | JLAURX | 2007/07/11 |

THIRD ANGLE PROJECTION | DRAWING: C-SIZE | SERIES: 76060

molex

IMPACT 100 OHM DC
5 PAIR SIGNAL MODULE GUIDE LEFT SALES DWG

PRODUCT CUSTOMER DRAWING

| DOCUMENT NUMBER | DOC TYPE | DOC PART | REVISION |
|---|---|---|---|
| SD-76060-002 | PSD | 001 | K |

| MATERIAL NUMBER | CUSTOMER | SHEET NUMBER |
|---|---|---|
| SEE TABLE | GENERAL MARKET | 1 OF 2 |

| DOCUMENT STATUS | P1 | RELEASE DATE | 2022/05/13 03:06:31 |
|---|---|---|---|

FORMAT: master-tb-prod-C
REVISION: J1
DATE: 2021/05/21

| MATERIAL NUMBER | # OF COLUMNS | # OF DIFF PAIR | DIM "A" MAX | DIM "B" | PTH∅ |
|---|---|---|---|---|---|
| 76060-***0 | 10 | 50 | 26.60 | 17.10 | 0.46 ±0.05 |
| 76060-***2 | 12 | 60 | 30.40 | 20.90 | |
| 76060-***4 | 14 | 70 | 34.20 | 24.70 | |
| 76060-***6 | 16 | 80 | 38.00 | 28.50 | |
| 76060-***0 | 10 | 50 | 26.60 | 17.10 | 0.39 ±0.05 |
| 76060-***2 | 12 | 60 | 30.40 | 20.90 | |
| 76060-***4 | 14 | 70 | 34.20 | 24.70 | |
| 76060-***6 | 16 | 80 | 38.00 | 28.50 | |

76060-****

MODULE & TAIL PLATING TYPE
3 = LEFT GUIDED LEAD-FREE

POLARIZATION KEY ORIENTATION
0 = NO KEY
1 = A  5 = E
2 = B  6 = F
3 = C  7 = G
4 = D  8 = H

# OF COLUMNS
10 = 10 COL 0.46 PTH
12 = 12 COL 0.46 PTH
14 = 14 COL 0.46 PTH
16 = 16 COL 0.46 PTH
20 = 10 COL 0.39 PTH
22 = 12 COL 0.39 PTH
24 = 14 COL 0.39 PTH
26 = 16 COL 0.39 PTH

THIS DRAWING CONTAINS INFORMATION THAT IS PROPRIETARY TO MOLEX ELECTRONIC TECHNOLOGIES, LLC AND SHOULD NOT BE USED WITHOUT WRITTEN PERMISSION

| DIMENSION UNITS | SCALE |
|---|---|
| mm | NTS |

GENERAL TOLERANCES (UNLESS SPECIFIED)

| | | |
|---|---|---|
| ANGULAR TOL | ± | 0.5 ° |
| 4 PLACES | ± | |
| 3 PLACES | ± | |
| 2 PLACES | ± | 0.13 |
| 1 PLACE | ± | 0.25 |
| 0 PLACES | ± | |

DRAFT WHERE APPLICABLE MUST REMAIN WITHIN DIMENSIONS

CURRENT REV DESC: REMASTERED TO NX

EC NO: 705090
DRWN: SKANDB 2021/09/27
CHK'D: VINODM3 2022/02/17
APPR: LZENG 2022/05/13

INITIAL REVISION:
DRWN: MCARRANZA 2007/07/11
APPR: JLAURX 2007/07/11

THIRD ANGLE PROJECTION | DRAWING: C-SIZE | SERIES: 76060

molex

IMPACT 100 OHM DC
5 PAIR SIGNAL MODULE GUIDE LEFT SALES DWG

PRODUCT CUSTOMER DRAWING

| DOCUMENT NUMBER | DOC TYPE | DOC PART | REVISION |
|---|---|---|---|
| SD-76060-002 | PSD | 001 | K |

| MATERIAL NUMBER | CUSTOMER | SHEET NUMBER |
|---|---|---|
| SEE TABLE | GENERAL MARKET | 2 OF 2 |

| DOCUMENT STATUS | P1 | RELEASE DATE | 2022/05/13 03:06:31 |
|---|---|---|---|

FORMAT: master-tb-prod-C
REVISION: 21
DATE: 2021/05/01