Product data sheet
Characteristics

ZB4BK1533
Harmony XB4, Illuminated selector switch head, metal, green, Ø22, integral LED, 3 positions, spring return to center

Main

Range of Product	Harmony XB4
Product or Component Type	Head for illuminated selector switch
Product Compatibility	Integral LED
Device short name	ZB4
Bezel material	Chromium plated metal
Head type	Standard
Mounting diameter	0.87 in (22 mm)
Sale per indivisible quantity	1
Shape of signaling unit head	Round
Type of operator	To centre spring return
Operator profile	Green standard handle
Operator position information	3 positions +/- 45°

Complementary

CAD overall width	1.14 in (29 mm)
CAD overall height	1.14 in (29 mm)
CAD overall depth	1.69 in (43 mm)
Net Weight	0.08 lb(US) (0.036 kg)
Resistance to high pressure washer	1015.26 psi (7000000 Pa) 131 °F (55 °C) 0.1 m
Mechanical durability	500000 cycles
Electrical composition code	M3 4 single front mounting integral LED M6 2 single front mounting integral LED and transformer M10 2 single front mounting integral LED M4 4 single and double front mounting integral LED
Device presentation	Basic element

Environment

Protective treatment	TH
Ambient Air Temperature for Storage	-40…158 °F (-40…70 °C)
Ambient air temperature for operation	-40…158 °F (-40…70 °C)
Overvoltage category	Class I IEC 60536
IP degree of protection	IP66 IEC 60529 IP67 IP69 IP69K
NEMA degree of protection	NEMA 13 NEMA 4X
IK degree of protection	IK06 IEC 50102
Standards	UL 508 EN/IEC 60947-5-4 EN/IEC 60947-5-1 CSA C22.2 No 14 EN/IEC 60947-5-5 EN/IEC 60947-1 JIS C8201-5-1 JIS C8201-1

The information provided in this documentation contains general descriptions and/or technical characteristics of the performance of the products contained herein.
This documentation is not intended as a substitute for and is not to be used for determining suitability or reliability of these products for specific user applications.
It is the duty of any such user or integrator to perform the appropriate and complete risk analysis, evaluation and testing of the products with respect to the relevant specific application or use thereof.
Neither Schneider Electric Industries SAS nor any of its affiliates or subsidiaries shall be responsible or liable for misuse of the information contained herein.

Product Certifications	GL LROS (Lloyds register of shipping) UL Listed DNV CSA BV
Vibration resistance	5 gn 2…500 Hz)IEC 60068-2-6
Shock resistance	30 gn 18 ms) half sine wave acceleration IEC 60068-2-27 50 gn 11 ms) half sine wave acceleration IEC 60068-2-27

Ordering and shipping details

Category	22468 - PUSHBUTTONS,22MM(METAL) NEW
Discount Schedule	CS2
GTIN	3389110890884
Nbr. of units in pkg.	1
Package weight(Lbs)	1.45 oz (41 g)
Returnability	Yes
Country of origin	FR

Packing Units

Unit Type of Package 1	PCE
Package 1 Height	1.97 in (5 cm)
Package 1 width	2.05 in (5.2 cm)
Package 1 Length	1.30 in (3.3 cm)
Unit Type of Package 2	BB1
Number of Units in Package 2	5
Package 2 Weight	7.34 oz (208 g)
Package 2 Height	1.97 in (5 cm)
Package 2 width	1.30 in (3.3 cm)
Package 2 Length	10.43 in (26.5 cm)
Unit Type of Package 3	S02
Number of Units in Package 3	100
Package 3 Weight	9.72 lb(US) (4.41 kg)
Package 3 Height	5.91 in (15 cm)
Package 3 width	11.81 in (30 cm)
Package 3 Length	15.75 in (40 cm)

Offer Sustainability

Sustainable offer status	Green Premium product
California proposition 65	WARNING: This product can expose you to chemicals including: Di-isodecyl phthalate (DIDP), which is known to the State of California to cause birth defects or other reproductive harm. For more information go to www.P65Warnings.ca.gov
REACh Regulation	REACh Declaration
REACh free of SVHC	Yes
EU RoHS Directive	Pro-active compliance (Product out of EU RoHS legal scope) EU RoHS Declaration
Toxic heavy metal free	Yes
Mercury free	Yes
RoHS exemption information	Yes
China RoHS Regulation	China RoHS Declaration
Environmental Disclosure	Product Environmental Profile
Circularity Profile	End Of Life Information

Contractual warranty

Warranty	18 months

ZB4BK1533

Dimensions

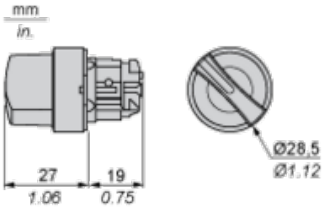

ZB4BK1533

Panel Cut-out for Pushbuttons, Switches and Pilot Lights (Finished Holes, Ready for Installation)

Connection by Screw Clamp Terminals or Plug-in Connectors or on Printed Circuit Board	Connection by Faston Connectors
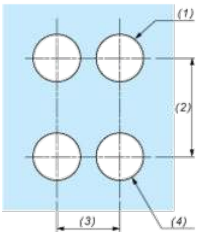	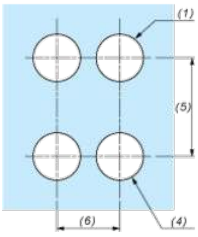
(1) Diameter on finished panel or support (2) 40 mm min. / 1.57 in. min. (3) 30 mm min. / 1.18 in. min. (4) Ø 22.5 mm / 0.89 in. recommended (Ø 22.3 mm $_{0}^{+0.4}$ / 0.88 in. $_{0}^{+0.016}$) (5) 45 mm min. / 1.78 in. min. (6) 32 mm min. / 1.26 in. min.	

Pushbuttons, Switches and Pilot Lights for Printed Circuit Board Connection

Panel Cut-outs (Viewed from Installer's Side)

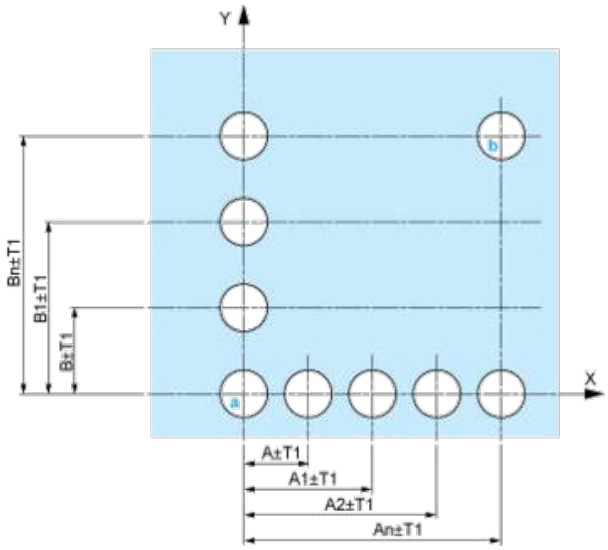

A: 30 mm min. / 1.18 in. min.

B: 40 mm min. / 1.57 in. min.

Printed Circuit Board Cut-outs (Viewed from Electrical Block Side)

Dimensions in mm

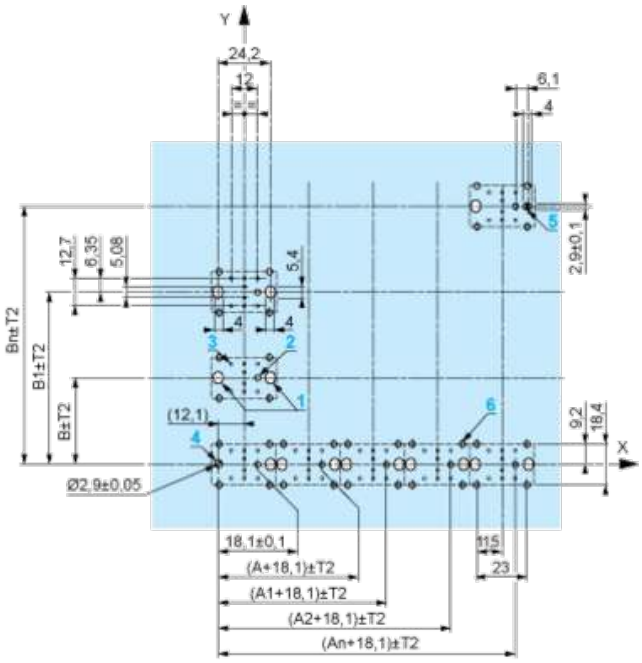

A: 30 mm min.

B: 40 mm min.

Dimensions in in.

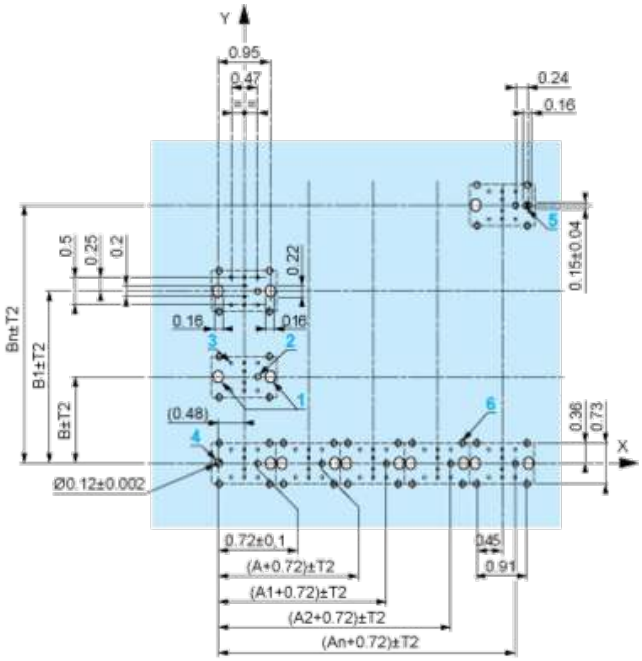

A: 1.18 in. min.

B: 1.57 in. min.

General Tolerances of the Panel and Printed Circuit Board

The cumulative tolerance must not exceed 0.3 mm / 0.012 in: T1 + T2 = 0.3 mm max.

Installation Precautions

- Minimum thickness of circuit board: 1.6 mm / 0.06 in.
- Cut-out diameter: 22.4 mm ± 0.1 / 0.88 in. ± 0.004
- Orientation of body/fixing collar ZB4 BZ009: ± 2°30' (excluding cut-outs marked a and b).
- Tightening torque of screws ZBZ 006: 0.6 N.m (5.3 lbf.in) max.
- Allow for one ZB4 BZ079 fixing collar/pillar and its fixing screws:
  - every 90 mm / 3.54 in. horizontally (X), and 120 mm / 4.72 in. vertically (Y).
  - with each selector switch head (ZB4 BD•, ZB4 BJ•, ZB4 BG•).

The fixing centers marked a and b are diagonally opposed and must align with those marked 4 and 5.

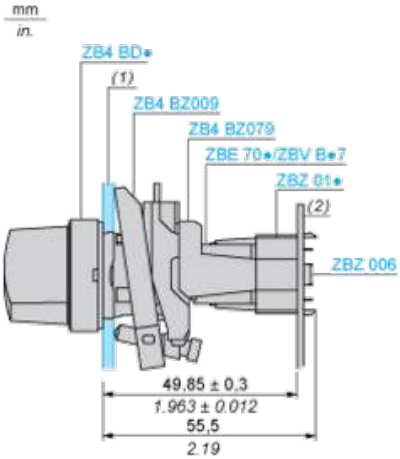

(1) Panel

(2) Printed circuit board

Mounting of Adapter (Socket) ZBZ 01•

- 1 2 elongated holes for ZBZ 006 screw access
- 2 1 hole Ø 2.4 mm ± 0.05 / 0.09 in. ± 0.002 for centring adapter ZBZ 01•
- 3 8 × Ø 1.2 mm / 0.05 in. holes
- 4 1 hole Ø 2.9 mm ± 0.05 / 0.11 in. ± 0.002, for aligning the printed circuit board (with cut-out marked a)
- 5 1 elongated hole for aligning the printed circuit board (with cut-out marked b)
- 6 4 holes Ø 2.4 mm / 0.09 in. for clipping in adapter ZBZ 01•

Dimensions An + 18.1 relate to the Ø 2.4 mm ± 0.05 / 0.09 in. ± 0.002 holes for centring adapter ZBZ 01•.

Electrical Composition Corresponding to Code M3

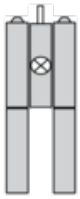

Electrical Composition Corresponding to Code M4

Electrical Composition Corresponding to Codes M6 and P2

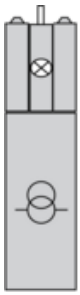

Electrical Composition Corresponding to Codes M5, M10, MF1, MR1 and MF2

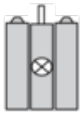

Legend

Single contact

Double contact

Light block

Possible location

Sequence of Contacts Fitted to 3-position Selector Switch Body

Position 315°

Push	Position	Top			
Bottom					
Location		Left	Right		
State		1	0		
Contacts	N/O		closed	open	
N/C		open	closed		

Position 0°

Push	Position	Top			
Bottom					
Location		Left	Right		
State		0	0		
Contacts	N/O		open	open	
N/C		closed	closed		

Position 45°

Push	Position	Top			
Bottom					
Location		Left	Right		
State		0	1		
Contacts	N/O		open	closed	
N/C		closed	open		