THIS DRAWING IS UNPUBLISHED. RELEASED FOR PUBLICATION ,19 .
© COPYRIGHT 19 BY AMP INCORPORATED. ALL RIGHTS RESERVED.

LOC	DIST
AA	22

REVISIONS

P	LTR	DESCRIPTION	DATE	DWN	APVD
	D	REV; EC 0G7A-0191-98	29JAN99	DLD	CMB

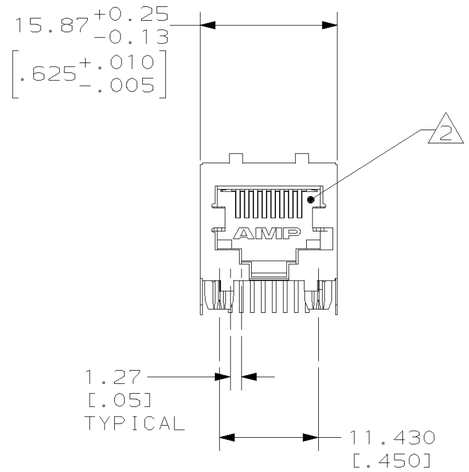

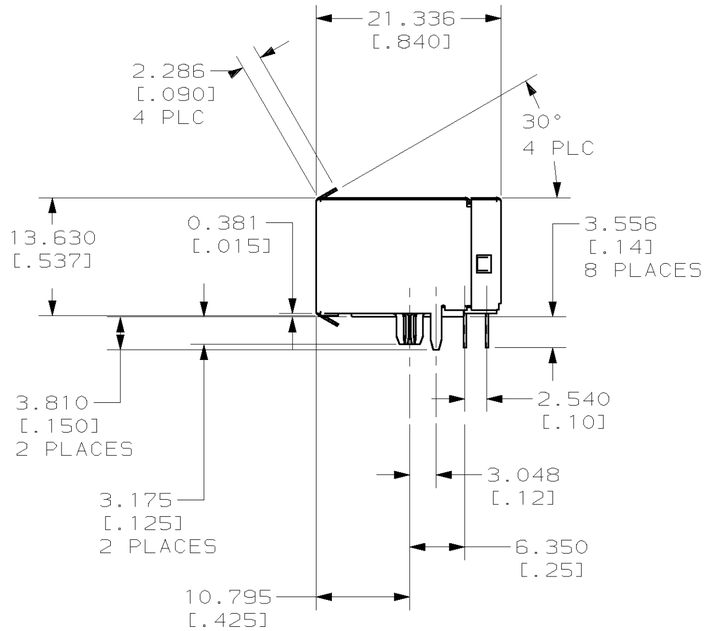

1. MATERIAL: HOUSING PCT POLYESTER, BLACK, IR COMPATIBLE, UL 94V-0.
TERMINALS - 0.33[.013] THICK PHOS BRONZE PLATED WITH 1.27µm[.000050] MINIMUM THICK HARD GOLD IN LOCALIZED AREA AND 3.81µm [.000150] MINIMUM THICK TIN-LEAD IN SOLDER AREA OVER 1.27µm[.000050] MINIMUM THICK NICKEL UNDERPLATE.
SHIELDS - 0.254[.010] THICK COPPER ALLOY PLATED WITH 2.03µm[.000080] MINIMUM TIN-LEAD OVER 2.54µm[.000100] MINIMUM COPPER.

2. JACK CAVITY CONFORMS TO FCC RULES AND REGULATIONS, PART 68 SUBPART F.

3. ALL DIMENSIONS SHOWN ARE NOMINAL UNLESS OTHERWISE SPECIFIED.

4. CAUTION: CATEGORY 5 JACK SOLDER TAIL POSITIONS DO NOT FOLLOW SAME NUMBER SEQUENCE AS THAT OF TRADITIONAL JACKS.

5. USE #30 DRILL BIT OR 3.25mm DRILL BIT WHEN PRODUCING THESE PCB HOLES.

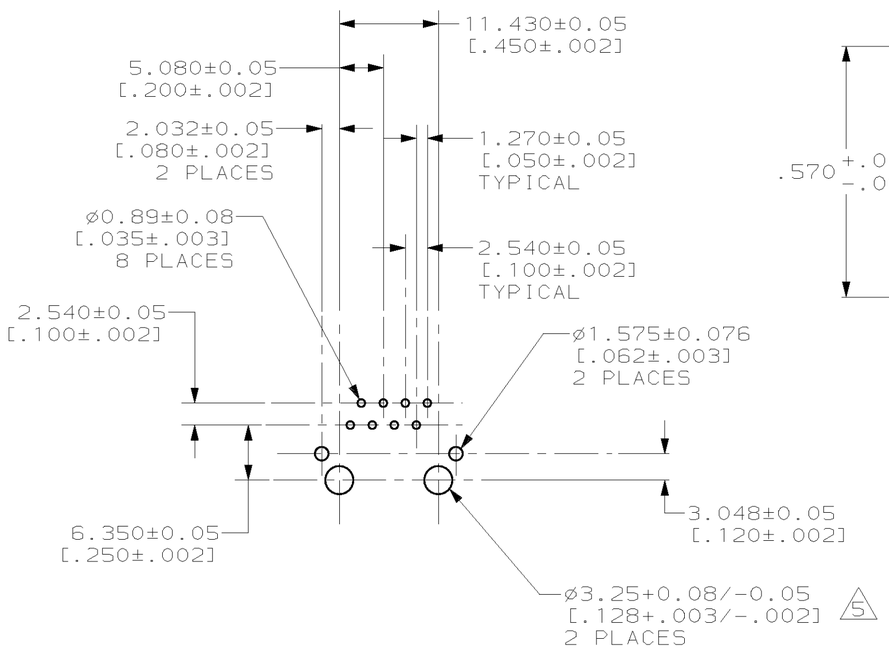

SUGGESTED PC BOARD LAYOUT
COMPONENT SIDE

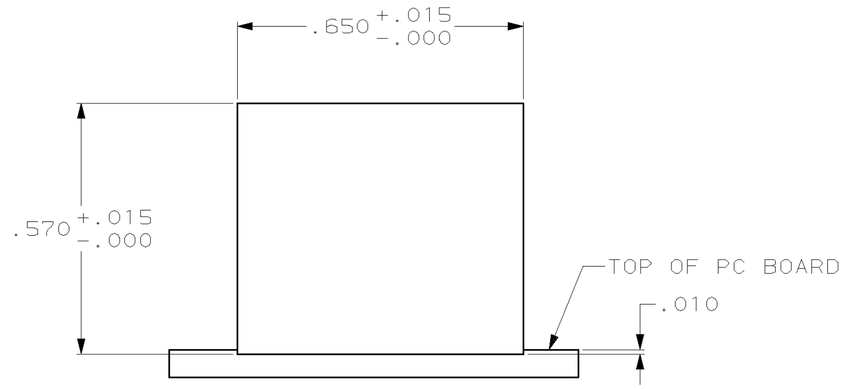

SUGGESTED PANEL CUTOUT
SCALE 4:1

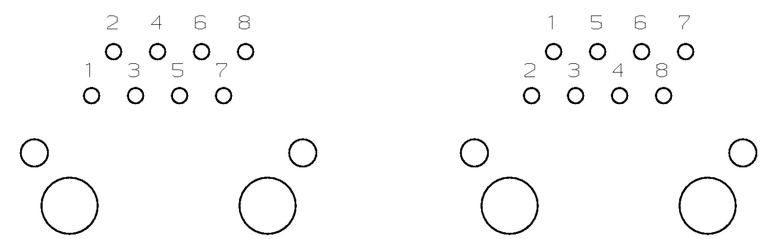

TRADITIONAL JACK

4 CATEGORY 5 JACK

558344

558344-1
PART NUMBER

THIS DRAWING IS A CONTROLLED DOCUMENT FOR AMP INCORPORATED. IT IS SUBJECT TO CHANGE AND THE CONTROLLING ENGINEERING ORGANIZATION SHOULD BE CONTACTED FOR THE LATEST REVISION.

DIMENSIONS: mm[INCHES]

TOLERANCES UNLESS OTHERWISE SPECIFIED:
0 PLC ±-
1 PLC ±-
2 PLC ±0.254[.01]
3 PLC ±0.127[.005]
4 PLC ±-
ANGLES ±-

MATERIAL 1
FINISH 1

DWN	T. PITTS	2-2-94
CHK	B. FOX	2-16-94
APVD	G. REED	2-16-94
PRODUCT SPEC	108-1163	
APPLICATION SPEC	114-2048	
WEIGHT	–	

CUSTOMER DRAWING

AMP Incorporated
Harrisburg, PA 17105-3608

NAME: MODULAR JACK ASSEMBLY, 8 POSITION, RIGHT ANGLE, LOW PROFILE, SHIELDED, PANEL GROUND, CATEGORY 5

SIZE	CAGE CODE	DRAWING NO	SCALE	SHEET	OF	REV
A2	00779	C-558344	2:1	1	1	D

AMP 1471-9 REV 09MAY94

02-FEB-99 09:45:11 amp36051 /home/amp36051/edmmod