Ratings
Temperature: -40 ~ 70 °C
Voltage: 150 V

Conductor
Gauge: 32 AWG 0.04 mm²
Material: tinned copper strands
Strand size: ∅0.05 x 19
Resistance at 20 °C: 590 Ω /km max

Insulator
Material: HDPE
Color: gray, purple, orange, green, blue, yellow, white, black, red
Diameter: ∅0.55 ±0.10 mm
Nominal thickness: 0.15 mm
Resistance at 20 °C: 1000 MΩ /km min

Shield
Type: spiral
Material: tinned copper strands
Stranding: ∅0.08 mm
Coverage: 90 % min

Outer jacket
Material: TPU
Color: black
Nominal thickness: 0.50 mm
Diameter: ∅3.5 ±0.20 mm

Filler
Material: aramid fiber

Tests
Tensile strength: 25.5 kgf
Dielectric test: 1500 V dc for 1 minute without breakdown
Bend test at 200 g, ±90 °, 30 cycles /min: 10,000 cycle minimum

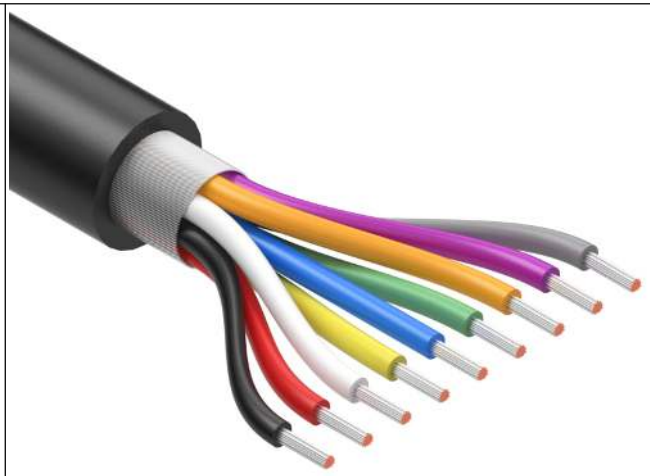

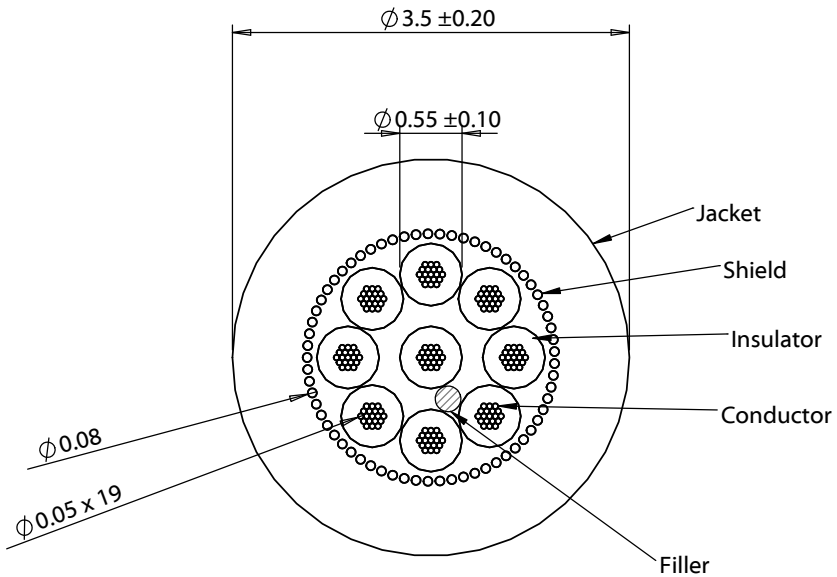

Revision:	Date:	Description:
A	10/11/2018	Initial release
A1	1/18/2019	Changed filler material to generic name

Prepared: PS Digitally signed by PS Date: 2019.07.19 13:13:06 -07'00'

Verified: CH Digitally signed by CH Date: 2019.07.19 13:49:27 -07'00'

Dimensions are in millimeters.
Tolerances:
X: ± 0.5 mm
X.X: ± 0.3 mm
X.XX: ± 0.05 mm

Notes:

RoHS compliant
Jacket meets ISO 10993 Biological Compatibility
Phthalate and halogen free
Function test: no open, no short, no intermittent

Description:

Wire, 9C TS, 32 AWG, 150V, 70C, 3.5 mm, shielded, TPU, 75A, WBL

TENSILITY
tel 1.541.323.3228 800 877.670.7118
fax 1.541.323.4202 web tensility.com

Size: A
Part number: 30-01192
Scale: 15:1
Sheet 1 of 1

To see a custom version of this cable assembly, call Tensility at 541-323-3228 or email engineering@tensility.com

5 4 3 2 1