THIS DRAWING IS A CONTROLLED DOCUMENT.

LOC	DIST
AD	25

REVISIONS

P	LTR	DESCRIPTION	DATE	DWN	APVD
	0	DRAWN	-	-	-

1. WIRE BARREL WILL ACCEPT 10 AWG WIRE.
2. MATES WITH PART NUMBER 148357-1.
3. RECOMMENDED CRIMPING TOOL: DANIELS TOOL #M300-BT, POSITIONER PART NUMBER SP689, SETTING #3, STRIP LENGTH 8.13[.320].

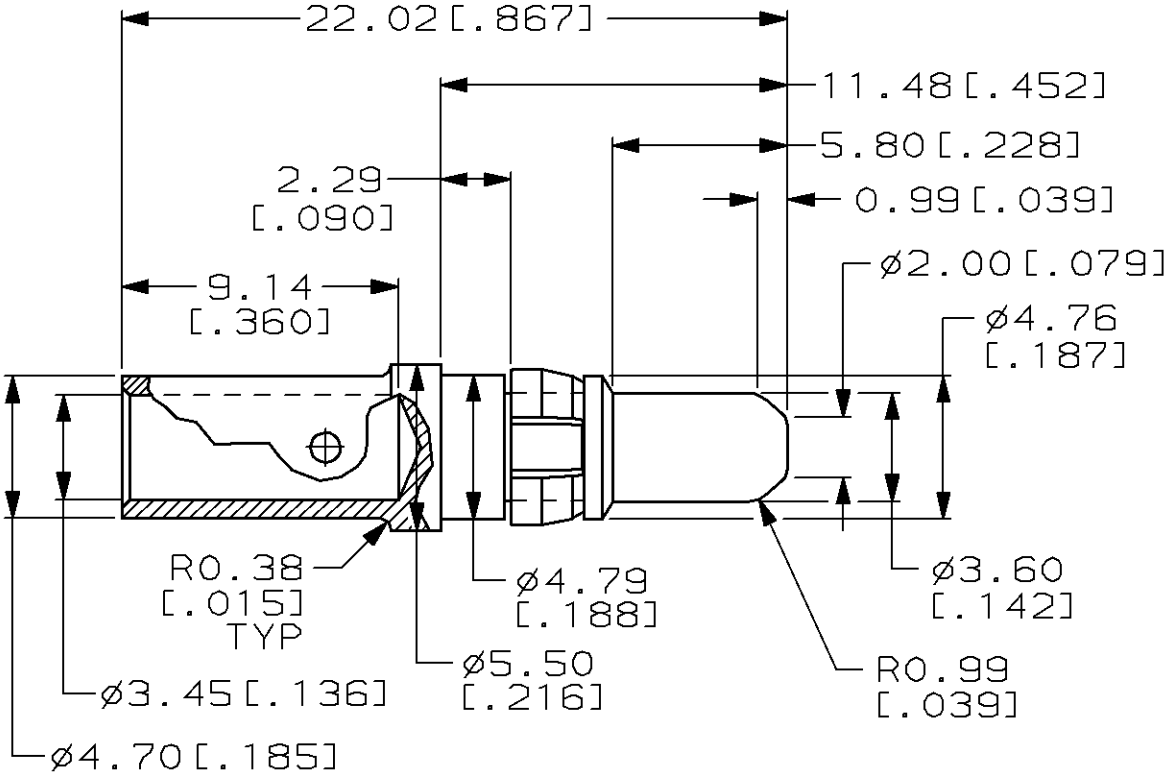

CONTACT AREA FINISH	MATERIAL	PART NUMBER
0.00076[.000030] GOLD	CONTACT; BRASS RETAINING RING; BERYLLIUM COPPER	148406-1

DIMENSIONS: mm

TOLERANCES UNLESS OTHERWISE SPECIFIED:

0 PLC	±-
1 PLC	±-
2 PLC	±0.13[.005]
3 PLC	±-
4 PLC	±-
ANGLES	±-

DWN L. BRINER 10/10/97
CHK R. PATTERSON 10/10/97
APVD R. PATTERSON 10/10/97
PRODUCT SPEC –
APPLICATION SPEC –
WEIGHT –

MATERIAL –
FINISH –

AMP Incorporated
Harrisburg, PA 17105-3608

NAME PIN CONTACT, POWER, EUROCARD TYPE M,30 AMP

SIZE	CAGE CODE	DRAWING NO
A4	00779	C-148406

CUSTOMER DRAWING

SCALE 4:1 SHEET 1 OF 1 REV 0

THIS DRAWING IS UNPUBLISHED. © COPYRIGHT 19 BY AMP INCORPORATED. ALL RIGHTS RESERVED. RELEASED FOR PUBLICATION ,19 .

AMP 1469-35 REV 23FEB95