DRAWING MADE IN THIRD ANGLE PROJECTION

680107 ⇔ 680107

<US161B>DEPTPROJB>U.161B>U.MINI-APPL

| PART NUMBER | REV | FIRST USED |
|---|---|---|
| 680107-1 | B | 854400-1 |
| 680107-2 | B | 565435-5 |
| 680107-3 | B | 354500-1 |

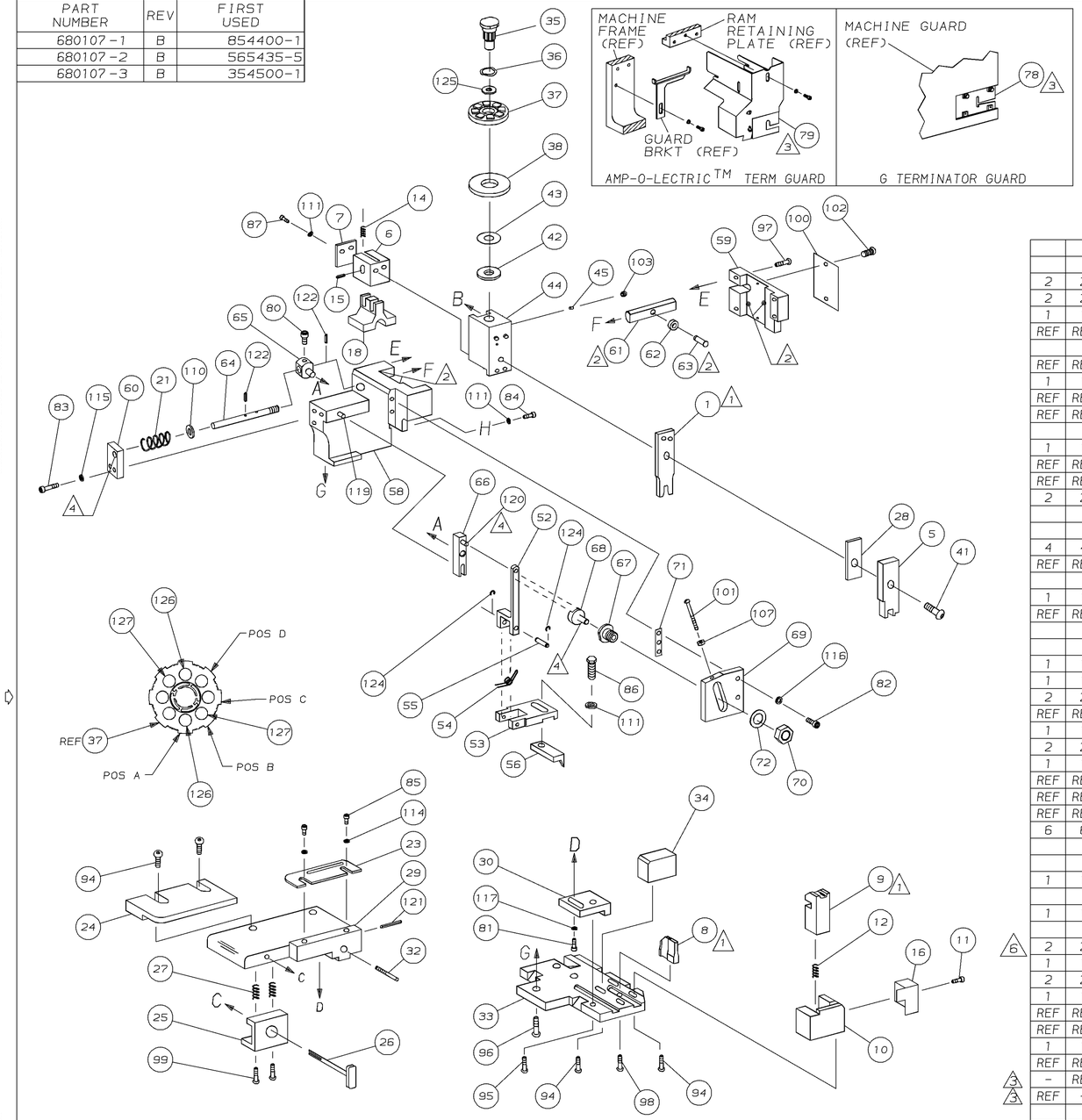


| TERMINAL NAME: SPECIAL, .180 RCPT, TRUCK LITE | |
|---|---|
| | 189668 |
| TERM APPL SPEC | – |

| CRIMPING DATA | | | |
|---|---|---|---|
| PAD LTR | CRIMP HEIGHT | WIRE SIZE | |
| A | .128 ±.002 | 8 | |
| B | .107 ±.002 | 10 | |
| C | NOT | USED | |
| D | NOT | USED | |
| CRIMP | SIZE | TYPE | RANGE |
| WIRE | .180 | F | 10 - 8 |
| INSUL | – | – | – |
| FEED | APPL INST | SET UP GAGE | LAYOUT |
| .750 | 408-8040 | 458637-1 | L1586 |
| WIRE STRIP LENGTH | | – | |

| QTY REQD PER ASSY | | | | | PARTS LIST | | |
|---|---|---|---|---|---|---|---|
| | | | | | | | 129 |
| | | | | | | | 128 |
| 2 | 2 | 2 | – | C | 1-354779-4 | PIN, WIRE DISC (.3060)B | 127 |
| 2 | 2 | 2 | – | C | 7-354778-1 | PIN, WIRE DISC (.2850)A | 126 |
| 1 | 1 | 1 | – | A | 986950-1 | WASHER, FLAT PRECISION | 125 |
| REF | REF | REF | – | A | 21045-3 | RING,RET "C"(ø.187)FD FING PIN | 124 |
| | | | | | | | 123 |
| REF | REF | REF | – | A | 5-21028-1 | PIN,SLT SPR(ø.125x.50)ADJ ROD | 122 |
| 1 | 1 | 1 | – | A | 4-21028-0 | PIN,SLT SPR(ø.093x.75)ST GDE PL | 121 |
| REF | REF | REF | – | A | 1-21030-1 | PIN,DOWEL(ø.187x.50)LEVER | 120 |
| REF | REF | REF | – | A | 1-21030-6 | PIN,DOWEL(ø.187x1.25)HOUSING | 119 |
| | | | | | | | 118 |
| 1 | 1 | 1 | – | A | 21024-5 | WASHER, LOCK(#10)ADJ BLOCK | 117 |
| REF | REF | REF | – | A | 21024-5 | WASHER,LOCK(#10)ADJ PLATE | 116 |
| REF | REF | REF | – | A | 21024-5 | WASHER,LOCK(#10)FEED GDE ROD | 115 |
| 2 | 2 | 2 | – | A | 21024-2 | WASHER,LOCK(#4)FRONT STP GUIDE | 114 |
| | | | | | | | 113 |
| | | | | | | | 112 |
| 4 | 4 | 4 | – | A | 21024-4 | WASHER,LOCK(#8)STRIPPER | 111 |
| REF | REF | REF | – | A | 21899-4 | WASHER,FLAT(ø5/16)SCREW ADJ | 110 |
| | | | | | | | 109 |
| 1 | 1 | 1 | – | A | 21018-5 | NUT,HEX(NO.6)HOLDDOWN | 108 |
| REF | REF | REF | – | A | 21018-5 | NUT,HEX(6-32)FEED ADJ | 107 |
| | | | | | | | 106 |
| | | | | | | | 105 |
| 1 | 1 | – | – | A | 992031-1 | PIN, CLEVIS | 104 |
| 1 | 1 | 1 | – | A | 21009-2 | SCR,SKT SET(1/4-20x.25 LW)RAM | 103 |
| 2 | 2 | 2 | – | A | 21017-2 | SCR,DRIVE(#2x.19)ID PLATE | 102 |
| REF | REF | REF | – | A | 6-23715-5 | SCR,PAN HD(6-32x1.50)FEED ADJ | 101 |
| 1 | 1 | 1 | – | B | 461264-1 | PLATE, IDENTIFICATION | 100 |
| 2 | 2 | 2 | – | A | 3-21002-0 | SCR,BHC(10-32x.88)DRAG | 99 |
| 1 | 1 | 1 | – | A | 22733-8 | SCR,BHC(8-32x.38 LW)ANVIL | 98 |
| REF | REF | REF | – | A | 2-21002-9 | SCR,BHC(10-32x.75)CAP | 97 |
| REF | REF | REF | – | A | 2-22733-8 | SCR,BHC(1/4-20x.62)HOUSING | 96 |
| REF | REF | REF | – | A | 2-21002-7 | SCR,BHC(10-32x.50)SG ADJ BLOCK | 95 |
| 6 | 6 | 6 | – | A | 2-21002-2 | SCR,BHC(8-32x.50)SHEAR | 94 |
| | | | | | | | 93 |
| | | | | | | | 92 |
| 1 | 1 | 1 | – | A | 1-21002-7 | SCR,BHC(6-32x.38)CAM | 91 |
| | | | | | | | 90 |
| 1 | 1 | – | – | A | 7-21000-9 | SCR,SHC(4-40x.19)STRIPPER | 89 |
| | | | | | | | 88 |
| 2 | 2 | 2 | – | A | 3-21000-0 | SCR,BHC(8-32X.86)DEP HOLD | 87 |
| 1 | 1 | 1 | – | A | 2-22603-0 | SCR,HEX HD(8-32x.31)FEED FINGER | 86 |
| 2 | 2 | 2 | – | A | 1-21000-3 | SCR,SHC(4-40x.25)F ST GUIDE | 85 |
| 1 | 1 | 1 | – | A | 2-21000-7 | SCR,SHC(8-32x.50)STRIPPER | 84 |
| REF | REF | REF | – | A | 3-21000-7 | SCR,SHC(10-32x.75)FEED ROD GD | 83 |
| REF | REF | REF | – | A | 3-21000-6 | SCR,SHC(10-32x.62)FD ADJ BLK | 82 |
| 1 | 1 | 1 | – | A | 3-21000-4 | SCR,SHC(10-32x.38)SG ADJ BL | 81 |
| REF | REF | REF | – | A | 3-21000-4 | SCR,SHC(10-32x.38)PIVOT BLK | 80 |
| – | REF | – | – | B | 455749-1 | GUARD, WINDOW | 79 |
| REF | – | – | – | B | 679532-1 | INSERT, GUARD | 78 |
| | | | | | | | 77 |
| | | | | | | | 76 |
| | | | | | | | 75 |
| | | | | | | | 74 |
| | | | | | | | 73 |
| REF | REF | REF | – | A | 458109-1 | WASHER, SPECIAL | 72 |
| REF | REF | REF | – | A | 690517-1 | SPACER | 71 |
| -3 | -2 | -1 | U/M | DWG SIZE | PART NO | DESCRIPTION | ITEM NO |
| ← REVISION OF EACH ASSY NO (WHEN BLANK, USE DWG REVISION) | | | | | | | |

| QTY REQD PER ASSY | | | | | PARTS LIST | | |
|---|---|---|---|---|---|---|---|
| -1 | LEADMAKER | | | | MECH POST FEED | | |
| -2 | BENCH MODEL K | | | | MECH PRE FEED | | |
| -3 | BENCH MODEL G | | | | MECH PRE FEED | | |
| REF | REF | REF | – | B | 22594-8 | NUT,HEX(1/2-20) | 70 |
| REF | REF | REF | – | B | 240628-1 | PLATE, ADJUSTMENT | 69 |
| REF | REF | REF | – | B | 240626-1 | SHAFT, PIVOT | 68 |
| REF | REF | REF | – | B | 240633-1 | BUSHING | 67 |
| REF | REF | REF | – | A | 455680-1 | LEVER, INTERMEDIATE | 66 |
| REF | REF | REF | – | B | 240629-1 | BLOCK, PIVOT | 65 |
| REF | REF | REF | – | A | 240632-2 | SCREW, ADJ FEED ROD | 64 |
| REF | REF | REF | – | B | 240659-3 | PIN, CAM ROLLER | 63 |
| REF | REF | REF | – | B | 240658-1 | ROLLER, CAM | 62 |
| REF | REF | REF | – | B | 454398-2 | ROD, FEED | 61 |
| REF | REF | REF | – | A | 454178-1 | GUIDE, FEED ROD | 60 |
| REF | REF | REF | – | C | 454220-1 | CAP, RAM | 59 |
| REF | REF | REF | – | D | 454485-1 | HOUSING | 58 |
| | | | | | | | 57 |
| 1 | 1 | 1 | – | B | 1-694433-6 | PAWL, FEED | 56 |
| REF | REF | REF | – | B | 240624-1 | PIN, FEED FINGER | 55 |
| REF | REF | REF | – | B | 691499-1 | SPRING, FEED FINGER | 54 |
| REF | REF | REF | – | B | 690541-1 | HOLDER, FEED FINGER | 53 |
| REF | REF | REF | – | A | 455679-2 | LEVER, TERMINAL FEED ARM | 52 |
| | | | | | | | 51 |
| | | | | | | | 50 |
| 1 | – | – | – | B | 690602-6 | CAM, PRE-FEED 1 5/8 ST | 49 |
| – | 1 | – | – | B | 690602-5 | CAM, PRE-FEED 1 1/8 ST | 48 |
| – | – | 1 | – | B | 690501-4 | CAM, POST-FEED 1 5/8 ST | 47 |
| 1 | 1 | 1 | – | B | 459456-2 | APPLICATOR, BASIC (SUBASSY) | 46 |
| 1 | 1 | 1 | – | A | 690191-1 | PLUG, NYLON | 45 |
| 1 | 1 | 1 | – | C | 455673-1 | RAM | 44 |
| 1 | 1 | 1 | – | A | 690125-1 | WASHER, LAMINATED | 43 |
| 1 | 1 | 1 | – | A | 690124-7 | WASHER, RAM | 42 |
| 1 | 1 | 1 | – | A | 7-21002-9 | BOLT, CRIMPER(5/16x1.00) | 41 |
| | | | | | | | 40 |
| | | | | | | | 39 |
| 1 | 1 | 1 | – | A | 690223-2 | SPACER, INSULATION DISC | 38 |
| 1 | 1 | 1 | – | D | 354777-1 | WIRE DISC, PLASTIC | 37 |
| 1 | 1 | 1 | – | A | 22480-5 | WASHER, SPRING | 36 |
| 1 | 1 | 1 | – | B | 690212-1 | POST, RAM | 35 |
| 1 | 1 | 1 | – | B | 690786-1 | SUPPORT, TERMINAL | 34 |
| REF | REF | REF | – | D | 455675-1 | PLATE, BASE | 33 |
| 1 | 1 | 1 | – | A | 690432-3 | SCREW, ADJUSTMENT | 32 |
| | | | | | | | 31 |
| REF | REF | REF | – | B | 455689-1 | BLOCK, STRIP GUIDE ADJ | 30 |
| 1 | 1 | 1 | – | C | 455671-1 | PLATE, STRIP GUIDE | 29 |
| 1 | 1 | 1 | – | C | 1-455888-7 | SPACER, FRONT SHEAR DEP | 28 |
| 2 | 2 | 2 | – | A | 1-22284-0 | SPRING, DRAG | 27 |
| 1 | 1 | 1 | – | B | 690546-1 | LEVER, DRAG RELEASE | 26 |
| 1 | 1 | 1 | – | B | 240792-1 | DRAG, TERMINAL | 25 |
| 1 | 1 | 1 | – | D | 6-690504-9 | GUIDE, STRIP (REAR) | 24 |
| 1 | 1 | 1 | – | A | 690438-1 | GUIDE, STRIP (FRONT) | 23 |
| – | – | 1 | – | B | 690472-2 | STRIPPER | 22 |
| REF | REF | REF | – | A | 4-22284-9 | SPRING, FEED RETURN | 21 |
| 1 | 1 | – | – | A | 679218-1 | STRIPPER WIRE STOP ASSY | 20 |
| 1 | 1 | – | – | B | 458949-3 | STRIPPER | 19 |
| 1 | 1 | 1 | – | B | 318164-1 | HOLDER, TERMINAL | 18 |
| | | | | | | | 17 |
| 1 | 1 | 1 | – | B | 691667-3 | GUARD, CHIP (FRONT) | 16 |
| 1 | 1 | 1 | – | B | 4-21028-0 | PIN,SLT SPRING(.094X.75) | 15 |
| 2 | 2 | 2 | – | A | 3-22278-0 | SPRING,HOLDER | 14 |
| | | | | | | | 13 |
| 1 | 1 | 1 | – | A | 5-22280-0 | SPRING, SHEAR | 12 |
| 1 | 1 | 1 | – | B | 690461-1 | STOP, SHEAR | 11 |
| 1 | 1 | 1 | – | C | 1-690459-0 | HOLDER, SHEAR (FRONT) | 10 |
| 1 | 1 | 1 | – | C | 454276-5 | SHEAR, FLOAT (FRONT) | 9 |
| 1 | 1 | 1 | – | C | 7-683403-0 | ANVIL | 8 |
| 1 | 1 | 1 | – | A | 455053-1 | PLATE,RETAINING | 7 |
| 1 | 1 | 1 | – | B | 455052-1 | CARRIER,TERM HOLDER | 6 |
| 1 | 1 | 1 | – | C | 1-455889-8 | DEPRESSOR, SHEAR (FRONT) | 5 |
| | | | | | | | 4 |
| | | | | | | | 3 |
| | | | | | | | 2 |
| 1 | 1 | 1 | – | C | 456412-3 | CRIMPER, WIRE | 1 |
| -3 | -2 | -1 | U/M | DWG SIZE | PART NO | DESCRIPTION | ITEM NO |
| ← REVISION OF EACH ASSY NO (WHEN BLANK, USE DWG REVISION) | | | | | | | |

680107

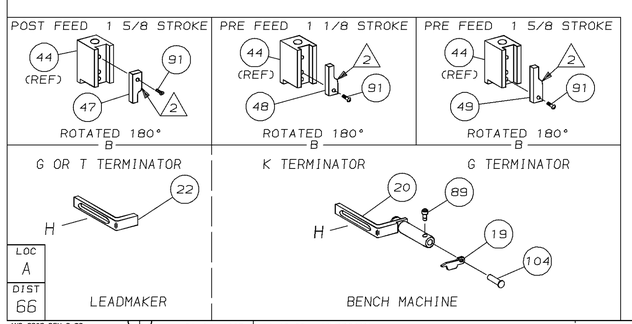


1. RECOMMENDED SPARE PARTS.
2. GREASE LIGHTLY.
3. GUARD MUST BE IN PLACE WHEN OPERATING APPLICATOR IN A BENCH MACHINE.
4. LUBRICATE DAILY USING NO. 20 MACHINE OIL.
5. ITEMS WITH QTY OF REF SPECIFIED (EXCEPT ITEMS 78 AND 79) ARE USED ON ITEM 46.
6. CUT TO LENGTH AT ASSY

| P | F | LTR | REVISION RECORD | APP | DATE |
|---|---|---|---|---|---|
| | | B | 0150-6309-95 | SF | 7-95 |
| | | A | REVISED | CE | 7-94 |

DIMENSIONS IN INCHES. DO NOT SCALE PRINT.
TOLERANCES UNLESS OTHERWISE SPECIFIED,
2 PLC DEC ±-
3 PLC DEC ±-
4 PLC DEC ±-
ANGLES ± -
SURF TEXTURE: √
REMOVE BURRS, BREAK SHARP EDGES R.015 MAX

| | | | |
|---|---|---|---|
| MATL – | HT TR – | FIN – | |
| DR JC BAKER 6/15/94 | APP 6/15/94 A BEDDICK | AMP Incorporated Harrisburg, PA 17105-3608 | |
| CHK 6/15/94 C.ERISMAN | REL 8/5/94 B. MORGAN | | |
| NAME SIDE FEED HDM APPLICATOR | | MACHINE REF MINI APPL | |
| SCALE – | D DWG NO 680107 | SHEET 1 OF 1 | REV B |

THIS DRAWING IS A CONTROLLED DOCUMENT FOR AMP INCORPORATED. IT IS SUBJECT TO CHANGE AND THE CONTROLLING ENGINEERING ORGANIZATION SHOULD BE CONTACTED FOR THE LATEST REVISION.

THIS INFORMATION IS CONFIDENTIAL AND IS DISCLOSED TO YOU ON CONDITION THAT NO FURTHER DISCLOSURE IS MADE BY YOU TO OTHER THAN AMP PERSONNEL WITHOUT WRITTEN AUTHORIZATION FROM AMP INCORPORATED, HARRISBURG, PA.