NOTES:
1. MATERIALS AND FINISHES:
   BODY - BRASS, NICKEL PLATING
   CONTACT PIN - BERYLLIUM COPPER & BRASS, GOLD PLATING
   INSULATOR - PTFE,NATURAL
2. ELECTRICAL:
   A. IMPEDANCE: 75 OHM
   B. FREQUENCY RANGE: DC - 1 GHz
   C. VSWR(RETURN LOSS): 1.12 (25dB), MAX @ DC - 1.5GHz
      1.22 (20dB), MAX @ 1.5 - 3 GHz
      VSWR PERFORMANCE DEPENDANT UPON PCB LAUNCH CONFIGURATION
   D. DIELECTRIC WITHSTANDING VOLTAGE: 1500 VRMS, MIN.
3. MECHANICAL:
   A. DURABILITY: 500 CYCLES MIN.
   B. TEMPERATURE RANGE: -65° C TO +165° C

THIRD ANGLE PROJ.

REVISIONS

REV	DESCRIPTION	DATE	ECO	APPR
A	RELEASE TO MFG.	14-May-10		MZ
B	REVISED DESIGN TO MEET 1500 VRMS DWV \RD-DMI605050ITI	18-May-16	00801	JTS
G	SYNCH REVISION LEVEL	10-Jun-16	01069	JTS

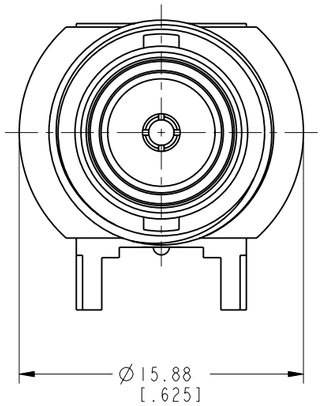

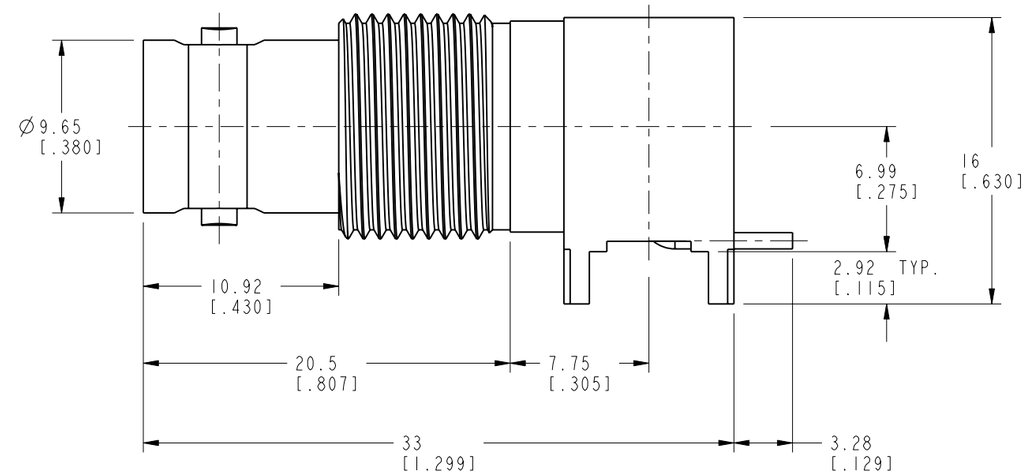

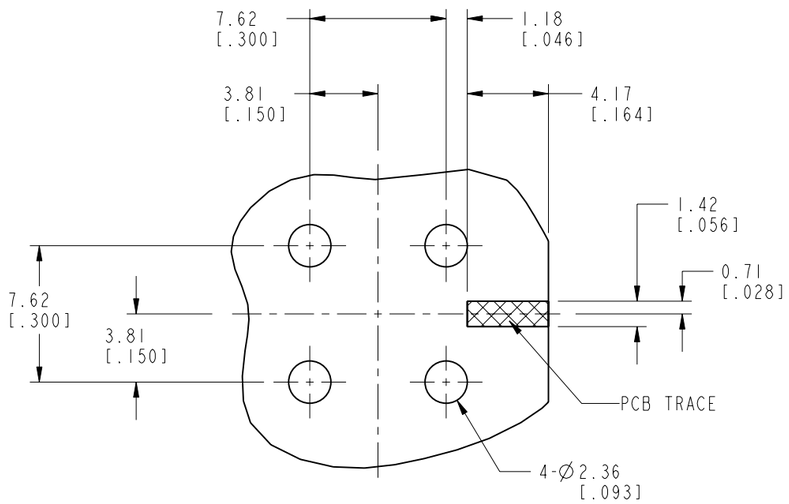

RECOMMENDED
PCB FOOTPRINT

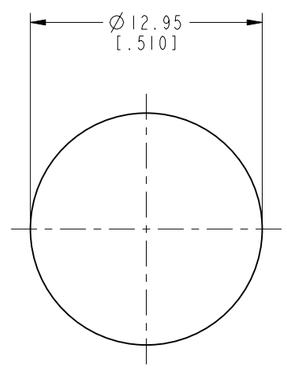

RECOMMENDED
PANEL HOLE

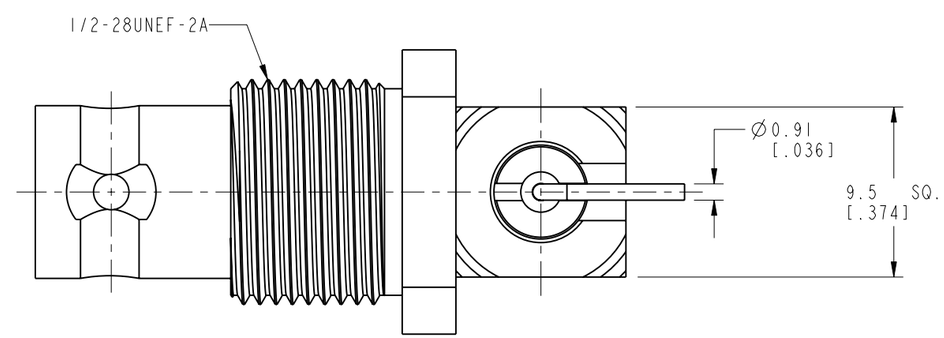

CUSTOMER OUTLINE DRAWING

ALL OTHER SHEETS ARE FOR INTERNAL USE ONLY

UNLESS OTHERWISE SPECIFIED, DIMENSIONS ARE IN METRIC AND TOLERANCES ARE:

<0.5mm	0.5 - 6mm	6 - 30mm	30 - 120mm	ANGLES
± 0.05mm	±0.1mm	±0.2mm	± 0.3mm	±1°

NOTICE - These drawings, specifications, or other data (1) are, and remain the property of Amphenol corp. (2) must be returned upon requiest; and (3) arre confidential and not to be disclosed to any person other than those to whom they are given by Amphenol Corp. the funishing of these drawings, specifications, or other data by Amphenol Corp., or to any other person to anyone for any purpose is not to be regarded by implicatioin or otherwise in any manner licensing, granting rights to permitting such holder or any other sperson to manufacture, use or sell any product, process or design, patented or otherwsie, that may in any way be related to or disclosed by said drawings, specifications, or other data.

MATERIAL

REFERENCE
31-70352 BUT THE PLATING OF BODY-CUBE WAS CHAGNED

FINISH

DRAWN TANGOR	DATE 17-Jun-16	
ENGINEER RICKSON	DATE 17-Jun-16	
APPROVED S.HSIEH	DATE 17-Jun-16	
CAD FILE I:\BNC\B6252CI-006-NT30G-75		

TITLE
BNC R/A PCB JACK
THRU LEG, SMT CONTACT
BULKHEAD

SCALE: 3.0:1.0 | SHEET 2 OF 2

DWG SIZE B | REV G

Amphenol RF
Danbury CT USA, Tainan, Taiwan, Shenzhen, China
www.amphenolrf.com

DRAWING NO.B6252CI-006-NT30G-75

ITEM NO. 016252ADMAINC7F

PART NO. 112800