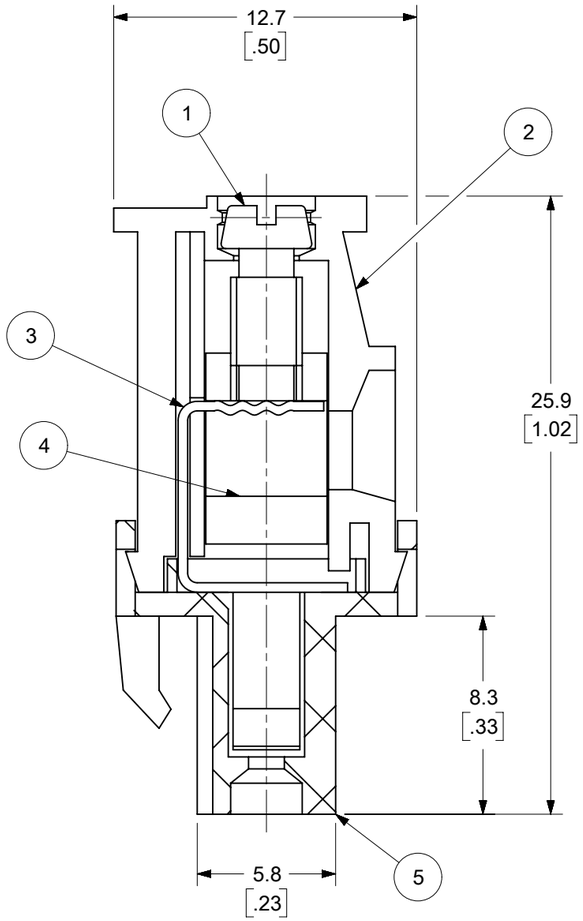

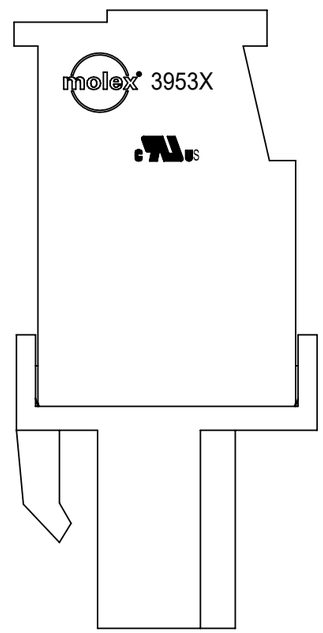

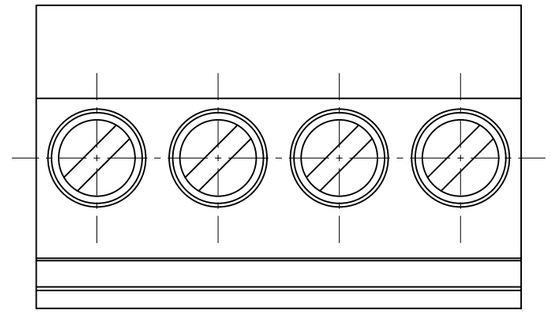

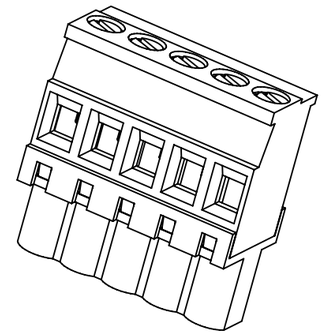

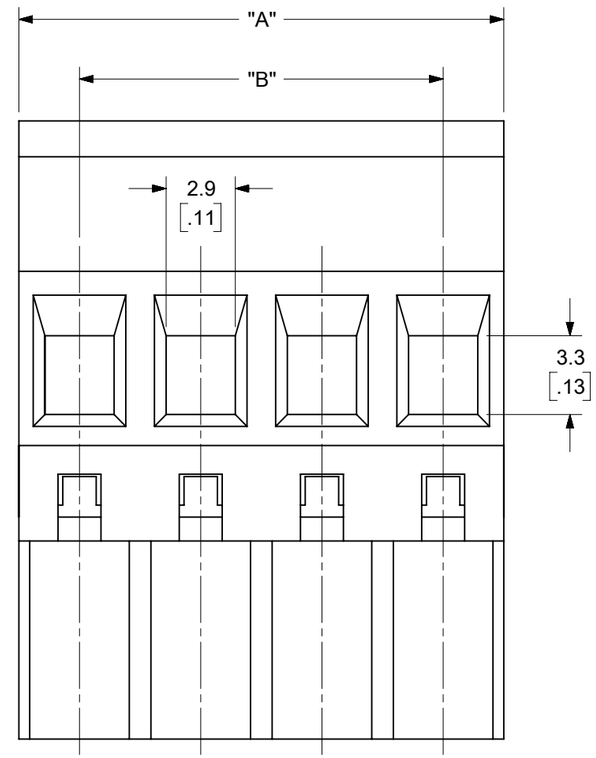

SPECIFICATIONS:

1. MATERIAL:
   (1). M3 CLAMP SCREW: ZINC PLATED STEEL
   (2). COVER: PA66, UL94-V0
   (3). TERMINAL: TIN PLATED COPPER ALLOY
   (4). CAGE: NICKEL PLATED BRASS
   (5). BODY: PA66, UL94-V0
2. WIRE RANGE: 12 - 30 AWG
3. ELETRICAL RATING: 300V, 18A PER UL
4. WIRE STRIP LENGTH: 5.0mm.
5. OPERATING TEMPERATURE: -40°C to +105°C.
6. MAX TORQUE: 5 IN LBS.
7. INSULATION RESISTANCE: DC 500V, 500MΩ.
8. DIELECTRIC WITHSTAND: AC 2500V FOR 1 MINUTE.
9. BREAKDOWN VOLTAGE: 4000V.
10. CONTACT RESISTANCE: <10 mΩ.

TOLERANCES			
MM	TOL	INCH	TOL
0-6	±0.25	0-.24	±.010
>6-30	±0.40	>.24-1.18	±.016
>30-120	±0.50	>1.18-4.76	±.020
>120	±0.80	>4.76	±.031

DOCUMENT STATUS	P1	RELEASE DATE	2023/05/25 16:08:35

FORMAT: Eng-lega-mpm-prod-B
REVISION: E1
DATE: 2021/05/01

FUNCTIONAL SYMBOLS
E/A = 0
E/C = 0
E/P = 0
DIVISIONAL SYMBOLS

THIS DRAWING CONTAINS INFORMATION THAT IS PROPRIETARY TO MOLEX ELECTRONIC TECHNOLOGIES, LLC AND SHOULD NOT BE USED WITHOUT WRITTEN PERMISSION

DIMENSION UNITS: MM/INCH
SCALE: 4:1

GENERAL TOLERANCES (UNLESS SPECIFIED)

	MM	INCH
4 PLACES	± ---	± ---
3 PLACES	± ---	± SEE CHART
2 PLACES	± SEE CHART	± SEE CHART
1 PLACE	± SEE CHART	± ---
0 PLACES	± ---	± ---
ANGULAR TOL	± ---	

DRAFT WHERE APPLICABLE MUST REMAIN WITHIN DIMENSIONS

CURRENT REV DESC: REMOVED PCB LAYOUT

EC NO: 750901
DRWN: ABENJAMINLW 2023/05/24
CHK'D: DACHAMMER 2023/05/24
APPR: JFMURPHY 2023/05/25

INITIAL REVISION:
DRWN: LROTHAUS 2006/01/09
APPR: JPAWLICK 2006/01/10

THIRD ANGLE PROJECTION

DRAWING: B-SIZE
SERIES: 39533

molex

5.08MM, EURO PLUG,
VERTICAL, REAR WIRE ENTRY

PRODUCT CUSTOMER DRAWING

DOCUMENT NUMBER	DOC TYPE	DOC PART	REVISION
SD-39533-002	PSD	001	A4

MATERIAL NUMBER	CUSTOMER	SHEET NUMBER
SEE SHEET-2	GENERAL MARKET	1 OF 2

DESCRIPTION	CIRCUIT SIZE	MATERIAL NUMBERS												DIMENSIONAL INFORMATION			
		BLACK						GREEN									
		100% TIN			30 u" GOLD			100% TIN			30 u" GOLD						
		PRINTING OPTIONS			PRINTING OPTIONS			PRINTING OPTIONS			PRINTING OPTIONS			DIM. "A"		DIM. "B"	
		None	10AV	11AV	None	10AV	11AV	None	10AV	11AV	None	10AV	11AV	mm	inch	mm	inch
5.08MM, EURO PLUG, VERTICAL, REAR WIRE ENTRY	2	395332002	395332302	395332402	395332502	395332802	395332902	395337002	395337302	395337402	395337502	395337802	395337902	10.16	.400	5.08	.200
5.08MM, EURO PLUG, VERTICAL, REAR WIRE ENTRY	3	395332003	395332303	395332403	395332503	395332803	395332903	395337003	395337303	395337403	395337503	395337803	395337903	15.24	.600	10.16	.400
5.08MM, EURO PLUG, VERTICAL, REAR WIRE ENTRY	4	395332004	395332304	395332404	395332504	395332804	395332904	395337004	395337304	395337404	395337504	395337804	395337904	20.32	.800	15.24	.600
5.08MM, EURO PLUG, VERTICAL, REAR WIRE ENTRY	5	395332005	395332305	395332405	395332505	395332805	395332905	395337005	395337305	395337405	395337505	395337805	395337905	25.40	1.000	20.32	.800
5.08MM, EURO PLUG, VERTICAL, REAR WIRE ENTRY	6	395332006	395332306	395332406	395332506	395332806	395332906	395337006	395337306	395337406	395337506	395337806	395337906	30.48	1.200	25.40	1.000
5.08MM, EURO PLUG, VERTICAL, REAR WIRE ENTRY	7	395332007	395332307	395332407	395332507	395332807	395332907	395337007	395337307	395337407	395337507	395337807	395337907	35.56	1.400	30.48	1.200
5.08MM, EURO PLUG, VERTICAL, REAR WIRE ENTRY	8	395332008	395332308	395332408	395332508	395332808	395332908	395337008	395337308	395337408	395337508	395337808	395337908	40.64	1.600	35.56	1.400
5.08MM, EURO PLUG, VERTICAL, REAR WIRE ENTRY	9	395332009	395332309	395332409	395332509	395332809	395332909	395337009	395337309	395337409	395337509	395337809	395337909	45.72	1.800	40.64	1.600
5.08MM, EURO PLUG, VERTICAL, REAR WIRE ENTRY	10	395332010	395332310	395332410	395332510	395332810	395332910	395337010	395337310	395337410	395337510	395337810	395337910	50.80	2.000	45.72	1.800
5.08MM, EURO PLUG, VERTICAL, REAR WIRE ENTRY	11	395332011	395332311	395332411	395332511	395332811	395332911	395337011	395337311	395337411	395337511	395337811	395337911	55.88	2.200	50.80	2.000
5.08MM, EURO PLUG, VERTICAL, REAR WIRE ENTRY	12	395332012	395332312	395332412	395332512	395332812	395332912	395337012	395337312	395337412	395337512	395337812	395337912	60.96	2.400	55.88	2.200
5.08MM, EURO PLUG, VERTICAL, REAR WIRE ENTRY	13	395332013	395332313	395332413	395332513	395332813	395332913	395337013	395337313	395337413	395337513	395337813	395337913	66.04	2.600	60.96	2.400
5.08MM, EURO PLUG, VERTICAL, REAR WIRE ENTRY	14	395332014	395332314	395332414	395332514	395332814	395332914	395337014	395337314	395337414	395337514	395337814	395337914	71.12	2.800	66.04	2.600
5.08MM, EURO PLUG, VERTICAL, REAR WIRE ENTRY	15	395332015	395332315	395332415	395332515	395332815	395332915	395337015	395337315	395337415	395337515	395337815	395337915	76.20	3.000	71.12	2.800
5.08MM, EURO PLUG, VERTICAL, REAR WIRE ENTRY	16	395332016	395332316	395332416	395332516	395332816	395332916	395337016	395337316	395337416	395337516	395337816	395337916	81.28	3.200	76.20	3.000
5.08MM, EURO PLUG, VERTICAL, REAR WIRE ENTRY	17	395332017	395332317	395332417	395332517	395332817	395332917	395337017	395337317	395337417	395337517	395337817	395337917	86.36	3.400	81.28	3.200
5.08MM, EURO PLUG, VERTICAL, REAR WIRE ENTRY	18	395332018	395332318	395332418	395332518	395332818	395332918	395337018	395337318	395337418	395337518	395337818	395337918	91.44	3.600	86.36	3.400
5.08MM, EURO PLUG, VERTICAL, REAR WIRE ENTRY	19	395332019	395332319	395332419	395332519	395332819	395332919	395337019	395337319	395337419	395337519	395337819	395337919	96.52	3.800	91.44	3.600
5.08MM, EURO PLUG, VERTICAL, REAR WIRE ENTRY	20	395332020	395332320	395332420	395332520	395332820	395332920	395337020	395337320	395337420	395337520	395337820	395337920	101.60	4.000	96.52	3.800
5.08MM, EURO PLUG, VERTICAL, REAR WIRE ENTRY	21	395332021	395332321	395332421	395332521	395332821	395332921	395337021	395337321	395337421	395337521	395337821	395337921	106.68	4.200	101.60	4.000
5.08MM, EURO PLUG, VERTICAL, REAR WIRE ENTRY	22	395332022	395332322	395332422	395332522	395332822	395332922	395337022	395337322	395337422	395337522	395337822	395337922	111.76	4.400	106.68	4.200
5.08MM, EURO PLUG, VERTICAL, REAR WIRE ENTRY	23	395332023	395332323	395332423	395332523	395332823	395332923	395337023	395337323	395337423	395337523	395337823	395337923	116.84	4.600	111.76	4.400
5.08MM, EURO PLUG, VERTICAL, REAR WIRE ENTRY	24	395332024	395332324	395332424	395332524	395332824	395332924	395337024	395337324	395337424	395337524	395337824	395337924	121.92	4.800	116.84	4.600

TOLERANCES			
MM	TOL	INCH	TOL
0-6	±0.25	0-.24	±.010
>6-30	±0.40	.24-1.18	±.016
>30-120	±0.50	1.18-4.76	±.020
>120	±0.80	>4.76	±.031

FUNCTIONAL SYMBOLS: E/A = 0; E/C = 0; E/P = 0

DIVISIONAL SYMBOLS

DIMENSION UNITS: MM/INCH

SCALE: 1:1

GENERAL TOLERANCES (UNLESS SPECIFIED)

	MM	INCH
4 PLACES	± ---	± ---
3 PLACES	± ---	± SEE CHART
2 PLACES	± SEE CHART	± SEE CHART
1 PLACE	± SEE CHART	± ---
0 PLACES	± ---	± ---
ANGULAR TOL	± ---	

DRAFT WHERE APPLICABLE MUST REMAIN WITHIN DIMENSIONS

THIS DRAWING CONTAINS INFORMATION THAT IS PROPRIETARY TO MOLEX ELECTRONIC TECHNOLOGIES, LLC AND SHOULD NOT BE USED WITHOUT WRITTEN PERMISSION

CURRENT REV DESC: REMOVED PCB LAYOUT

EC NO: 750901
DRWN: ABENJAMINLW 2023/05/24
CHK'D: DACHAMMER 2023/05/24
APPR: JFMURPHY 2023/05/25

INITIAL REVISION:
DRWN: LROTHAUS 2006/01/09
APPR: JPAWLICK 2006/01/10

THIRD ANGLE PROJECTION

DRAWING: B-SIZE
SERIES: 39533

molex

5.08MM, EURO PLUG, VERTICAL, REAR WIRE ENTRY

PRODUCT CUSTOMER DRAWING

DOCUMENT NUMBER	DOC TYPE	DOC PART	REVISION
SD-39533-002	PSD	001	A4

MATERIAL NUMBER	CUSTOMER	SHEET NUMBER
SEE CHART	GENERAL MARKET	2 OF 2

DOCUMENT STATUS	P1	RELEASE DATE	2023/05/25 16:08:35

FORMAT: Eng-legacy-mm-prod-B
REVISION: E1
DATE: 2021/05/01