PART NO.	ENGINEERING NO.	FINISHED LENGTH	CABLE CODE	CABLE COLOR	CABLE TYPE
1300620301	334T30K09M010A3	3 FT. 3 IN. (1M)	09	YELLOW	STATIC
1300620306	334T30K09M100A3	10 FT. 9 IN. (10M)	09	YELLOW	STATIC
1300622004	334T30K09M240A3	78 FT. 8 IN. (24M)	09	YELLOW	STATIC
1300620322	334T30K36M020A3	6 FT. 7 IN. (2M)	36	BLACK	FLEX
1300620300	334T30K26M005A3	1 FT 7.7 IN (.5M)	26	BLACK	STATIC

B

TOLERANCE CHART

FINISH LENGTH [FT] OVER	FINISH LENGTH [FT] UNDER	TOLERANCE [IN]	FINISH LENGTH [M] OVER	FINISH LENGTH [M] UNDER	TOLERANCE [mm]
0.00	.167	N/A	0.0	0.05	NA
.167	.500	+.63 -0	0.05	0.15	+16 -0
.500	1.00	+.75 -0	0.15	0.3	+19 -0
1.00	3.00	+1.75 -0	0.3	0.9	+44.5 -0
3.00	6.00	+2.19 -0	0.9	1.8	+55.6 -0
6.00	12.00	+3.50 -0	1.8	3.7	+88.8 -0
12.00	24.00	+6.50 -0	3.7	7.3	+165.1 -0
24.00	48.00	+12.50 -0	7.3	21.9	+317.5 -0
48.00	96.00	+24.50 -0	21.9	29.3	+622.3 -0
96.00	~	+2.00% -0	29.3	~	+2% OF FIN LGTH

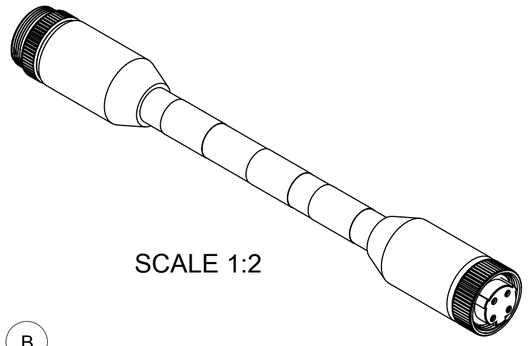

SCALE 1:2

B

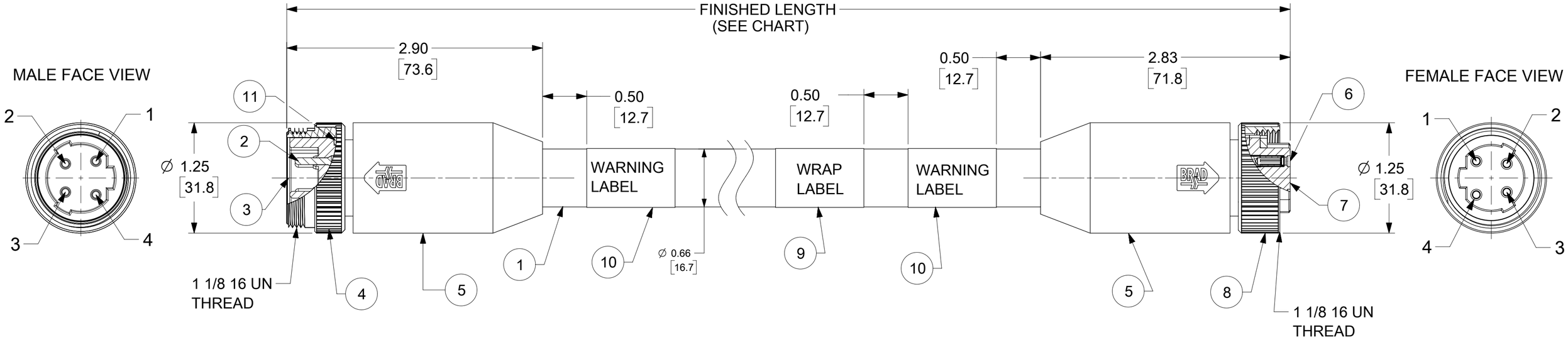

B

NOTE:
1) MATERIAL: SEE TABLE
2) FINISHES: SEE TABLE
3) ELECTRICAL DATA
   MAX. VOLTAGE: IEC60664 500V
   UL2237 600V
   MAX. CURRENT: 25A
4) ENVIRONMENTAL
   PROTECTION: IP67 (WHEN MATED)
   TEMPERATURE RATING: -40C TO +90C
5) ASSEMBLY IS RoHS COMPLIANT
6) UL LISTED FILE, CABLE TYPE K09: 258922
   CABLE TYPE K36: PENDING
7) DIMENSIONS ARE REFERENCE ONLY UNLESS OTHERWISE SPECIFIED

WIRING DIAGRAM

1	BLACK#1	1
2	BLACK#2	2
3	BLACK#3	3
4	GREEN/YELLOW	4

PART NUMBER MATRIX

334T30K09M010A3

B

CABLE TYPE

FINISH LENGTH
M001 = 0.1 METER
M010 = 1 METER
M100 = 10 METER

ITM	DESCRIPTION	MATERIAL	FINISH
11	GASKET SEAL	SILICONE	LIGHT GRAY
10	WARNING LABEL	VINYL	MULTI COLOR
9	WRAP LABEL	VINYL	YELLOW
8	FEMALE COUPLING NUT	BRASS	NICKEL PLATED
7	4P FEMALE INSERT	TPE	BLACK
6	SOCKET CONTACT	BRASS	GOLD PLATED
5	OVER MOLD	TPE	GRAY
4	MALE COUPLING NUT	BRASS	NICKEL PLATED
3	4P MALE INSERT	TPE	BLACK
2	PIN CONTACT	BRASS	GOLD PLATED
1	12/4C AWG SHLD HIGH-FLEX, VFD	TPE JACKET, XLPE INSUL	SEE CHART

B B

DOCUMENT STATUS	P1	RELEASE DATE	2021/07/16 22:41:33

FUNCTIONAL SYMBOLS
FA = 0
FC = 0
FP = 0
DIVISIONAL SYMBOLS

THIS DRAWING CONTAINS INFORMATION THAT IS PROPRIETARY TO MOLEX ELECTRONIC TECHNOLOGIES, LLC AND SHOULD NOT BE USED WITHOUT WRITTEN PERMISSION

DIMENSION UNITS: INCH/MM
SCALE: 1:1

GENERAL TOLERANCES (UNLESS SPECIFIED)

	MM	INCH
4 PLACES	±	±
3 PLACES	±	±
2 PLACES	±	±
1 PLACE	±	±
0 PLACES	±	±
ANGULAR TOL	± °	

DRAFT WHERE APPLICABLE MUST REMAIN WITHIN DIMENSIONS

CURRENT REV DESC: ITEM 5 WAS TPE. BOM, TEMP RATINGS, UL CERTIFIED FILE NO.,VOLATGE RATINGS & MAT. TABLE ARE UPDATED. MODIFIED TOL. TABLE

EC NO: 656902
DRWN: VHANDI 2020/05/26
CHK'D: MZIELINSKI 2021/06/25
APPR: BWOODMAN 2021/07/16

INITIAL REVISION:
DRWN: MZIELINSKI 2017/04/11
APPR: BWOODMAN 2017/06/30

THIRD ANGLE PROJECTION | DRAWING: C-SIZE | SERIES: 130062

molex

MINI CHANGE BRAD POWER CORDSET C SIZE
4 POLE MALE-FEMALE STRAIGHT TRI KEY 12 AWG

PRODUCT CUSTOMER DRAWING

DOCUMENT NUMBER	DOC TYPE	DOC PART	REVISION
1300620301	PSD	000	B

MATERIAL NUMBER	CUSTOMER	SHEET NUMBER
SEE TABLE	GENERAL MARKET	1 OF 1

FORMAT: Eng-lega-master-tb-prod-C
REVISION: E
DATE: 2020/01/14