ANATECH ELECTRONICS INC
RF & Microwave Filters & Products

1820 MHz Cavity Bandpass Filter

Part Number: AB1820B818

ISO 9001 REGISTERED FIRM

Electrical specifications

Center Frequency: 1820 MHz
Input / Output Impedance: 50 Ohms
Passband: 1819-1821 MHz
Passband Insertion Loss: <4 dB @ 1819-1821 MHz
Passband Ripple: <0.2 dB
Passband Return Loss: >15 dB
<3 dB 1812-1828 MHz
Rejection: >50 dB@ 0-1795 MHz
Rejection 2: >50 dB @ 1845-6000 MHz
Power Handling: 50 W

Mechanical

Mounting Method: Threaded Mounting Holes
Connector Type: SMA (F)
Dimensions: 4.5" x 1.75" x 1.0"

Environmental

Operating Temperature: -45 to +85 deg.C
Storage Temperature: -55 to +95 deg.C
Shock: 20 G. 11ms
Vibration: 20 G. 5 to 200 Hz

Outline Drawing:

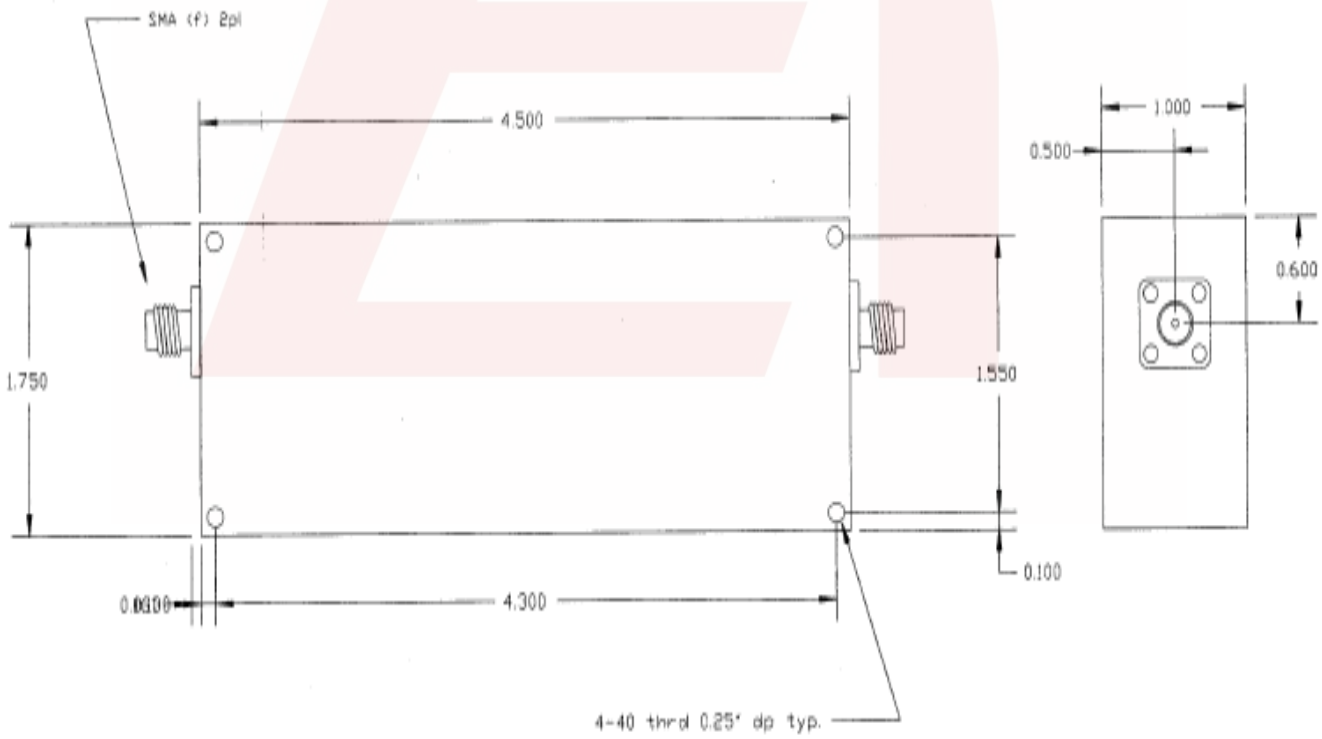

DS-B818-03152018-Rev0

70 Outwater Lane
Garfield, NJ 07026
Phone: (973) 772-4242
Fax : (973) 772-4646
Email: sales@anatechelectronics.com
Web: www.anatechelectronics.com