REV.	DATE	ECR NO.	DESCRIPTION
NC	06/07/00	XXXXXX	INITIAL RELEASE
A	03/30/11	2156	UPDATE DRAWING FORMAT

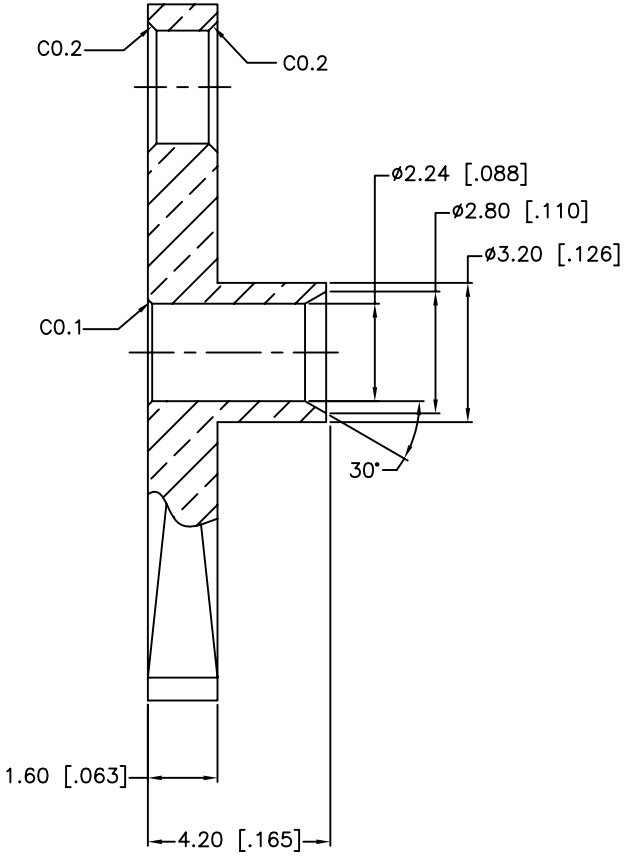

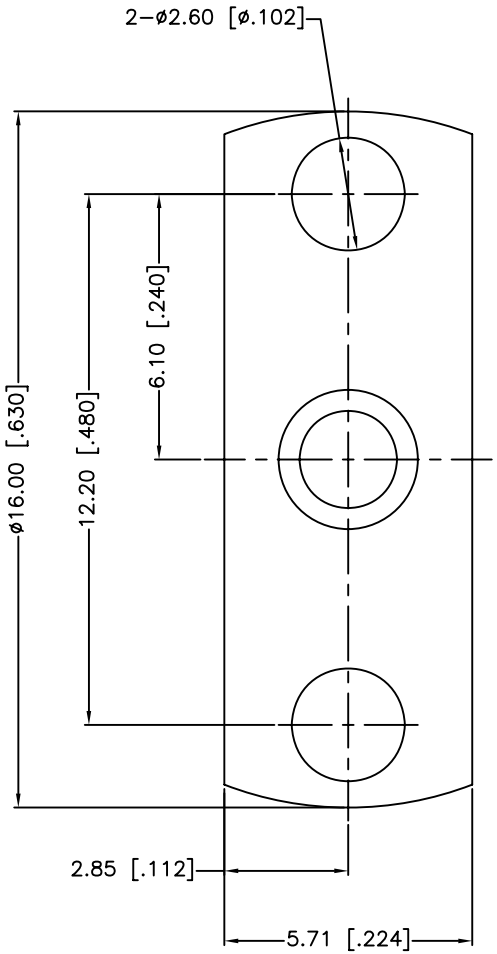

NOTE: GOLD PL. 3 MIN. THICK OVER NICKEL PL. 100 MIN. THICK OVER COPPER STRIKE

1	BODY	BRASS	GOLD	1
	DESCRIPTION	MATERIAL	FINISH	QTY

UNLESS OTHERWISE SPECIFIED DIMENSIONS ARE IN MILLIMETERS. DIMENSIONS IN [ ] ARE IN INCHES AND FOR CUSTOMER REFERANCE ONLY.

UNLESS OTHERWISE SPECIFIED TOLERANCES FOR MILLIMETERS ARE:
0.5 – 8mm ± 0.20mm
8 – 30mm ± 0.40mm
30 – 120mm ± 0.50mm

UNLESS OTHERWISE SPECIFIED TOLERANCES FOR INCHES ARE:
.020 – .315 = ± 0.007"
.315 – 1.180 = ± 0.015"
1.180 – 4.724 = ± 0.020"

DO NOT SCALE DRAWING

APPROVALS		DATE
DRAWN	M.ZHANG	03/28/11
CHECKED		
ISSUED		
SHEET	1 OF 1	
CAD FILE	C:/CONNEX/142294.DWG	

Amphenol Connex

PART DESCRIPTION
TERMINATION 2 HOLE FLANG
(.085 SEMI RIGID CABLE)

PART NO. 142294

DWG. NO. 142294.DWG | REV. A | SIZE A | SCALE NA