ITEM NO.	PART NUMBER	DESCRIPTION	QTY.	COMPONENT NOTES
1	50-00595	Connector, dc plug, 5.5x2.5xL20.5mm, brass nickel plated	2	
2	30-00689	Wire, 2C TS, 22 AWG, UL2464, 300V, 80C, 4.3 mm, VW-1, PVC	1	
3	24-00161	Overmold, dc plug, twistlock, PVC	2	black

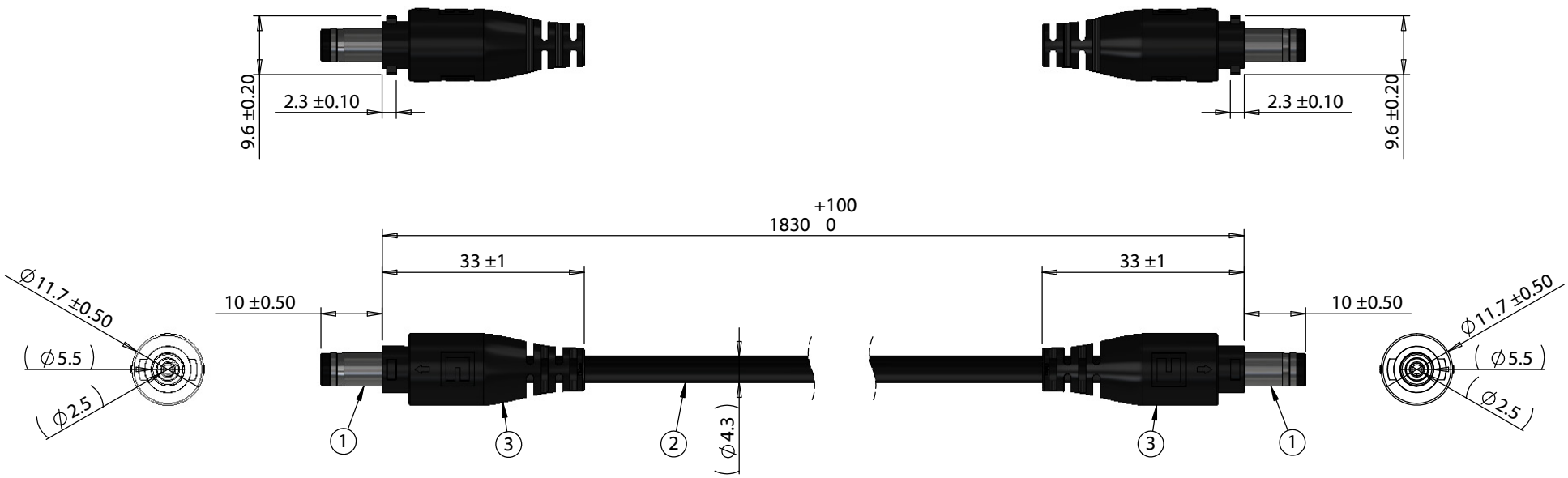

Notes:
Plugs mate with cable assembly: 10-02938 & 10-02980
Functionally equivalent components may be substituted

Wiring Diagram		
50-00595	wire color	50-00595
center	red	center
sleeve	black	sleeve

Revision:	Date:	Description:
A	11/7/2019	Initial release

Prepared: AW Digitally signed by AW Date: 2019.11.07 16:10:55 -08'00'

Verified: PS Digitally signed by PS Date: 2019.11.07 16:22:52 -08'00'

Dimensions are in millimeters.
Tolerances:
X: ± 0.5 mm
X.X: ± 0.3 mm
X.XX: ± 0.05 mm

Notes:

RoHS compliant

Function test: no open, no short circuit, no intermittent

Description:

Cable, 1830 mm, 5.5x2.5mm 50-00595 dc plug twist lock to same, 22 AWG

TENSILITY
tel 1.541.323.3228 800 877.670.7118
fax 1.541.323.4202 web tensility.com

Size: A
Part number: 10-03622
Scale: 1:1
Sheet 1 of 1

5 4 3 2 1

To see a custom version of this cable assembly, call Tensility at 541-323-3228 or email engineering@tensility.com