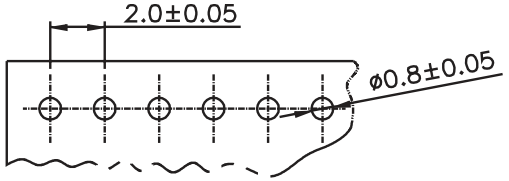

PCB LAYOUT - COMPONENT VIEW

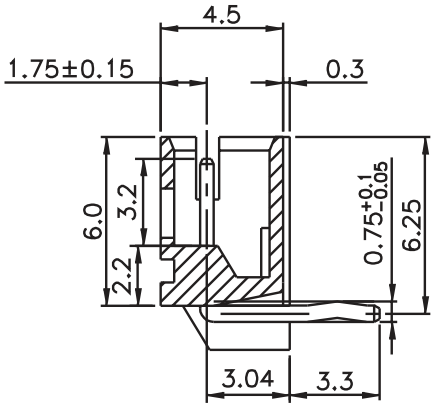

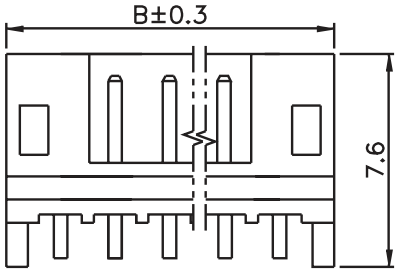

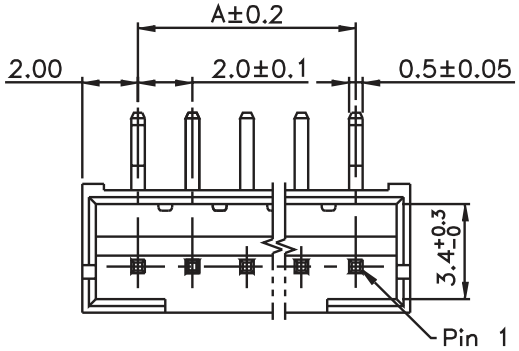

TECHNICAL CHARACTERISTICS

MATERIAL
INSULATOR: PA 66
FLAMMABILITY RATING: UL94-V0
COLOR: WHITE
CONTACT MATERIAL: COPPER ALLOY
CONTACT TYPE: STAMPED
CONTACT PLATING: TIN
QUALITY CLASS: 25 MATING CYCLES
PITCH: 2.00 MM

ENVIRONMENTAL
OPERATING TEMPERATURE: -25 UP TO 85°C
COMPLIANCE: LEAD FREE AND ROHS

ELECTRICAL
CURRENT RATING: 2 A
WORKING VOLTAGE: 125 VAC
INSULATOR RESISTANCE: >1000 MOHM
DIELECTRIC WITHSTANDING VOLTAGE: 800 VAC/MN
CONTACT RESISTANCE: 20 mOHM MAX

STANDARD
CERTIFIED: E323964

SOLDERING
JEDEC LEAD FREE WAVE SOLDERING PROCESS

PACKAGING
BAG

DIMENSION
A = 2.00 x (NB PIN - 1)
B = 2.00 x (NB PIN - 1) + 4.00

REV	DATE	FILE	BY
G			
F			
E	31-AUG-16	CERTIFIED	AK
D	06-AUG-13	CHARACTERISTIC	QL
C	17-NOV-09	STANDARD	JP
B	11-AUG-09	DIMENSIONS	JP
A	07-NOV-08	PDF	JP

PROJECTION:

APPROVAL: BBu

GENERAL TOLERANCE
.X = +/- 0.2
.XX = +/- 0.15

UNIT: MM
SCALE:
SHEET: 1/2
DRAW:

WÜRTH ELEKTRONIK

DESCRIPTION: 2.00 MM MALE HORIZONTAL SHROUDED HEADER

WERI PART NO: 620 0xx 117 22

SIZE **A4**

Cautions and Warnings:

This electronic component is designed and developed with the intention for use in general electronics equipments.
Before incorporating the components into any equipments in the field such as aerospace, aviation, nuclear control, submarine, transportation, (automotive control, train control, ship control), transportation signal, disaster prevention, medical, public information network etc. where higher safety and reliability are especially required or if there is possibility of direct damage or injury to human body, Wurth Elektronik must be asked for a written approval.
In addition, even electronic component in general electronic equipments, when used in electrical circuits that require high safety, reliability functions or performance, the sufficient reliability evaluation-check for the safety must be performed before by the user before usage.

RoHS Compliant							
G				PROJECTION:	GENERAL TOLERANCE		
F					.X = +/_ 0.2		
E					.XX = +/_ 0.15		
D							
C				APPROVAL: JC	UNIT: MM	DESCRIPTION: DISCLAIMER	SIZE
B					SCALE:		
A	10-SEP-14	PDF	QL		SHEET: 2/2	WERI PART NO: DISCLAIMER	A4
REV	DATE	FILE	BY		DRAW: QL		

WÜRTH ELEKTRONIK